TOSHIBA

用戶手冊
Owner's Manual

東芝家庭雪櫃
REFRIGERATOR FREEZER

僅供家庭使用
For Home Use Only

GR-RB405WE-PM*(**)
GR-RB410WE-PM*(**)



GR-RB410WE-PM*(**)　　GR-RB405WE-PM*(**)

- 非常感謝您購買東芝產品。
- 請閱讀本用戶手冊，並在使用前完全熟悉本產品，以便安全、正確地使用本產品。
- 請妥善保管本用戶手冊，以備將來參考之用。
- 請確保您收到了保修卡。
- Thank you very much for purchasing this Toshiba product.
- Read this Owner's Manual and become completely familiar with the product before use in order to use this product safely and correctly.
- Keep this Owner's Manual in a handy place for future reference.
- Make sure that you received your warranty.

目錄

1. 安全警告 1
1.1 警告 1
1.2 安全警示符號代表意義 5
1.3 用電相關事項 6
1.4 使用時相關事項 7
1.5 放置物品相關事項 8
1.6 能耗警示 8
1.7 廢棄時相關事項 9
2. 如何正確使用雪櫃 10
2.1 正確放置雪櫃 10
2.2 調整雪櫃平衡 12
2.3 燈部品更換 12
2.4 啟動 12
2.5 節能提示 13
3. 產品結構和功能 14
3.1 關鍵部件 14
3.2 功能介紹 16
3.3 多功能抽屜 18
3.4 折疊玻璃層架 19
3.5 飲水機 21
4. 維護及保養 22
4.1 整體清潔 22
4.2 除霜 23
4.3 玻璃層架清潔 23
4.4 多用途收納箱清潔 24
4.5 飲水機的使用與清潔 25
4.6 停止使用時 25
4.7 製冰盒（選配） 26
4.8 大顆粒製冰格 27
5. 答疑解惑 28
6. 產品廢棄處理 30

CONTENTS

1. Safety warnings 1
1.1 Warning 1
1.2 Meaning of safety warning symbols 5
1.3 Electricity related warnings 6
1.4 Warnings for using 7
1.5 Warnings for placement 8
1.6 Warnings for energy 8
1.7 Warnings for disposal 9
2. Proper use of the refrigerator 10
2.1 Placement 10
2.2 Leveling feet 12
2.3 Changing the Light 12
2.4 Starting 12
2.5 Energy saving tips 13
3. Structure and functions 14
3.1 Key components 14
3.2 Functions 16
3.3 Flex Zone 18
3.4 Folding glass shelf 19
3.5 Water dispenser 21
4. Maintenance and care of the appliance 22
4.1 Overall cleaning 22
4.2 Defrosting 23
4.3 Cleaning the glass shelf 23
4.4 Cleaning and use of utility box 24
4.5 Water dispenser use and cleaning 25
4.6 Out of operation 25
4.7 Ice making box (optional) 26
4.8 Large particle ice tray 27
5.Trouble shooting 29
6. Disposal of your appliance 30

1. 安全警告

請在安裝前先閱讀安全注意事項

為了防止對用戶或他人造成傷害以及財產損失，必須遵循以下使用說明。

由於忽視本使用說明書而導致的不正確操作可能會造成傷害或損壞。

1.1 警告

⚠ 警 告



警告：火災和易燃材料危險

- 警告：火災和易燃材料危險

  電器設備用製冷劑屬於易燃材料，請在安裝和運輸過程中要小心，切勿損壞冷卻管。
  如果發生氣體泄漏，請聯繫經銷商或當地服務代理商，並應始終採取以下預防措施：
  1. 打開窗户，以確保通風良好。
  2. 周圍嚴禁煙火，請勿使用其他電器設備。

- 本款電器設備旨在用於家庭和類似用途，如：商店、辦公室及其他工作環境中的員工廚房區域；酒店、汽車旅館及其他住宅型環境中的農舍及客房；住宿加早餐型環境；餐飲和類似的非零售用途。

- 請監管兒童，以防止他們玩弄電器設備。

- 警告：小心火災和觸電危險。
  電源線損壞時應及時更換，請聯繫經銷商或當地服務代理商進行更換。

1. Safety warnings

READ SAFETY PRECAUTIONS BEFORE INSTALLATION.

To prevent injury to the user or other people and property damage, the following instructions must be followed. Incorrect operation due to ignoring of instructions may cause harm or damage.

1.1 Warning

⚠ WARNING



Warning: risk of fire / flammable materials

- WARNING: Risk of fire disaster and explosion. The refrigerant of the appliance is flammable, please be care not to damage the cooling pipes during installation and transportation.If gas leakage happens, please contact the distributor or local service agent, and the following precautions should be always taken:
  1. Open the windows for ensuring good ventilation.
  2. No fire around and please do not use other electric appliance.

- This appliance is intended to be used in household and similar applications such as staff kitchen areas in shops, offices and other working environments; farm houses and by clients in hotels, motels and other residential type environments; bed and breakfast type environments; catering and similar non-retail applications.

- Children should be supervised to ensure that they do not play with the appliance.

- WARNING: Risk of fire disaster and electric shock.
  The power cord should be replaced when it has been damaged.
  Please contact the distributor or local service agent for replacement.

- 清洗電器設備時，或者長時間不使用電器設備時，請從插座上拔下電源插頭。
- 請勿使用延長電線或不接地的（雙插針）適配器。
- 警告：保持電器設備外殼或內置結構中的通風口暢通無阻。
- 警告：除了製造商推薦的裝置之外，請勿使用機械設備或其他裝置加速解凍過程。
- 警告：請勿損壞製冷劑迴路。
- 警告：請勿在電器設備食物儲藏室內使用電器設備，除非這些電器設備屬於製造商推薦的型號。
- 警告：請按照當地監管法規報廢使用易燃性環戊烷發泡材料和製冷劑的雪櫃。
- 警告：在定位電器設備時，請確保電源線免受夾住或受到損壞。
- 警告：請勿在電器設備的後面設置多個便攜式插座或便攜式電源。
- 警告：除了飲用水之外，請勿注入熱水、飲料或其他液體。
- 危險：小心兒童被夾住的危險。在扔掉廢舊雪櫃或冰櫃之前：
  – 必須先拆除雪櫃或冰櫃門和門密封件。
  – 先把架子放好，這樣孩子就不會輕易爬進去。
- 在嘗試安裝附件之前，必須將雪櫃與電源斷開。

- Please unplug the power plug from socket when clean the appliance or leave the appliance nonuse for a long time.
- Do not use extension cord or ungrounded (two prong) adapters.
- WARNING: Keep ventilation openings, in the appliance enclosure or in the built-in structure, clear of obstruction.
- WARNING: Do not use mechanical devices or other means to accelerate the defrosting process, other than those recommended by the manufacturer.
- WARNING: Do not damage the refrigerant circuit.
- WARNING: Do not use electrical appliances inside the food storage compartments of the appliance, unless they are of the type recommended by the manufacturer.
- WARNING: Please abandon the refrigerator according to local regulators for it use flammable cyclopentane foaming material and refrigerant.
- WARNING: When positioning the appliance, ensure the supply cord is not trapped or damaged.
- WARNING: Do not locate multiple portable socket-outlets or portable power supplies at the rear of the appliance.
- WARNING: Please fill with potable water only. Please do not fill hot water or liquids other than
  potable water such as juices.
- DANGER: Risk of child entrapment. Before you throw away your old refrigerator or freezer:
  - Remove doors and door seals.
  - Leave the shelves in place so that children may not easily climb inside.
- The refrigerator must be disconnected from the source of electrical supply. before attempting the installation of accessory.

· 雪櫃用製冷劑和環戊烷發泡材料屬於易燃材料。因此，雪櫃在報廢時，應遠離火源，並由具有相應資質的專門回收公司進行回收，而不是通過燃燒加以處理，以防止對環境造成破壞或其他危害。

· 8 歲以上的兒童以及身體、感官或心理能力較差或缺乏經驗和知識的人士如果已接受有關安全使用本電器設備的監督或指導，並能了解其中的危險，則可以使用本款電器設備。兒童不得玩弄本產品。兒童不得在無人監督的情況下進行清洗和使用維護。

· 本款電器設備不適用於身體，感官或心理能力較差或缺乏經驗和知識的人士（其中包括：兒童）使用，除非由負責其安全的人員就本產品的使用對其進行了監督或指導。

· 請勿在交通運輸工具（如：船舶等）上使用本產品。

· 如果發生噪聲、異味或冒煙等情況，請立即拔下電源插頭，並與經銷商或當地服務代理商聯繫。

· 請勿將手放在設備下方或後面，以免受傷。

· 請將包裝材料及其他部件放在兒童接觸不到的地方，以免造成窒息危險。

· Refrigerant and cyclopentane foaming material used for the refrigerator are flammable.
Therefore, w hen the refrigerator is scraped, it shall be kept away from any fire source and be recovered by a special recovering company with corresponding qualification other than be disposed by combustion, so as to prevent damage to the environment or any other harm.

· This appliance can be used by children aged from 8 years old or above and persons with reduce physical sensory or mental capabilities or lack of experience and knowledge if they have been given supervision or instruction concerning use of the appliance in a safe way and understand the hazards involved.
Children shall not play with the appliance.
Cleaning and user maintenance shall not be made by children without supervision.

· This appliance is not intended for use by persons (including children) with reduced physical, sensory or mental capabilities, or lack of experience and knowledge, unless they have been given supervision or instruction concerning use of the appliance by a person responsible for their safety.

· Please do not use the appliance on transportation tools(such as ship and so on).

· If noise, odor and smoking happens, pleaszze unplug the power plug immediately, and contact the distributor or local service agent.

· Please do not put your hands under or behind the appliance to prevent from being hurt.

· Please leave the packing materials and other parts out of the reach of children to prevent from risk of suffocation.

- 為了避免食物受到污染，請遵循以下使用說明：
  – 長時間打開門可能會導致電器設備儲藏室的温度大幅度升高。
  – 定期清洗可能與食物和易於檢修的排水系統接觸的表面。
  – 如果水箱已有 48 小時未使用，則必須將水箱清洗乾淨；如果有 5 天未抽水，則必須沖洗連接到水源的供水系統（注 1）。
  – 將生肉和魚存放在雪櫃適當的容器中，以免與其他食物接觸或滴到其他食物上。
  – 二星級 ** 儲藏室適用於儲存預冷凍食品，儲存或製作冰淇淋，以及製作冰塊。
  – 一星級 * 、二星級 ** 和三星級 *** 儲藏室不適用於冷凍新鮮食品。
  – 製冷電器設備如果長期空置，則應切斷（電源），進行解凍，清洗和烘乾，並打開門，以防止其內部翻發霉。

- 注 1、2 和 3：請根據您的產品儲藏室型號確認本產品是否適用。

- 對於獨立式電器設備來説：本款製冷電器設備並非旨在用作內置式電器設備。

- To avoid contamination of food, please respect the following instructions:
  - Opening the door for long periods can cause a significant increase of the temperature in the compartments of the appliance.
  - Clean regularly surfaces that can come in contact with food and accessible drainage systems.
  - Clean water tanks if they have not been used for 48h; flush the water system connected to a water supply if water has not been drawn for 5days. (note 1)
  - Store raw meat and fish in suitable containers in the refrigerator, so that it is not in contact with or drip onto other food.
  - Two-star ** compartments are suitable for storing pre-frozen food, storing or making ice-cream and making ice cubes. (note 2)
  -One -star *),two-star **, three-star *** compartments are not suitable for the freezing of fresh food. (note 3)
  - If the refrigerating appliance is left empty for long periods, switch of, defrost, clean, dry, and leave the door open to prevent mould developing within the appliance.

- Note 1,2,3: Please confirm whether it is applicable according to your product compartment type.

- For a freestanding appliance: this refrigerating appliance is not intended to be used as a built-in appliance.

1.2 安全警示符號代表意義

該符號表示禁止的事項。

不遵守指示可能會導致產品損壞或者危及使用者人身安全。



禁止符號
Prohibition symbol

該符號表示必須遵守的事項。

其行為必須嚴格按照要求操作執行。不遵守指示可能會導致產品損壞或者危及使用者人身安全。



指令符號
Mandatory symbol

該符號表示需注意的事項。

標記此標識的操作需要特別注意，如果不加以防範，可能導致輕度或者中度的傷害，或造成產品損傷。



注意符號
Cautioning symbol

1.2 Meaning of safety warning symbols

This is a prohibition symbol.
Any incompliance with instructions marked with this symbol may result in damage to the product or endanger

This is a Mandatory symbol.
It is required to operate in strict observance of instructions marked with this symbol; or otherwise damage to the product or personal injury may

This is a cautioning symbol.
Instructions marked with this symbol require special caution. Insufficient caution may result in slight or

1.3 用電類相關事項

- 拔掉雪櫃的電源插頭時切勿拉扯電源線。一定要緊緊握住插頭，從插座中直接拔出。

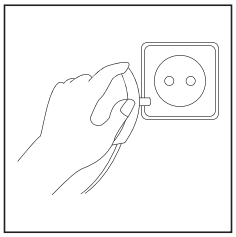

- 為保障安全使用，任何時候請不要損壞電源線，當電源線出現破損或插頭出現磨損時，切勿使用。
- 請勿用濕手觸摸電源插頭，以免觸電。

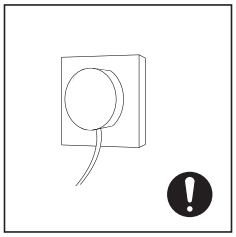

- 請使用專用電源插座，而且該電源插座不得與其他電器設備共用。電源插頭應與插座牢固接觸，否則可能會引起火災。
- 請確保電源插座的接地電極配備可靠的接地線。
- 請具有專業資格的人員幫忙檢查插座是否配有可靠的接地線。



- 用戶有責任把不接地插座改為表地插座。
- 請關閉漏氣閥，然後打開門窗，以防天然氣及其他易燃氣體泄漏。
  考慮到火花可能會引起火災，切勿拔下雪櫃及其他電器設備的插頭。

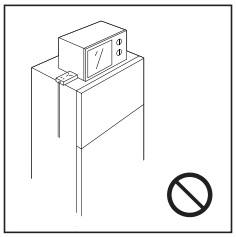

- 請勿在電器設備頂部使用電器設備，除非這些電器設備屬於製造商推薦的型號。

1.3 Electricity related warnings

- Do not pull the power cord when pulling the power plug of the refrigerator.Please firmly grasp the plug and pull out it from the socket directly.
- To ensure safe use, do not damage the power cord and do not use the power cord when it is damaged or worn.
- Please do not touch the power plug with wet hand to prevent from electric shock.
- Please use a dedicated power socket and the power socket shall not be shared with other electrical appliances. The power plug should be firmly contacted with the socket or else fires might be caused.
- Please ensure that the grounding electrode of the power socket is equipped with a reliable grounding line.
- Please ask for help from persons with professional qualification to examine whether the socket is with reliable grounding line or not.
- It is the users' responsibility to change the ungrounded socket into grounded socket.
- Please turn off the valve of the leaking gas and then open the doors and windows in case of leakage of gas and other flammable gases. Do not unplug the refrigerator and other electrical appliances considering that spark may cause a fire.
- Do not use electrical appliances on the top of the appliance, unless they are of the type recommended by the manufacturer.

1.4 使用時相關事項

- 嚴禁私自拆卸、改造本雪櫃、禁止損壞製冷管路，維修雪櫃必須由專業人員進行。

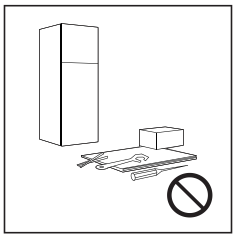

- 如果電源軟線損壞，為了避免危險，必須由銷售商或其維護部門相關的專業人員更換。

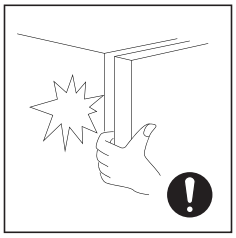

- 門與門之間以及門與雪櫃箱體之間的間隙很小，注意不要把手伸到這些區域內，以防擠傷手指。開關雪櫃門時，用力不要過大，以免物品掉落。



- 雪櫃開始運行之後，不要用濕手去拿冷凍室內的食品或容器，特別是金屬容器，以免凍傷手。

- 切勿讓任何兒童進入或爬上雪櫃；否則可能會造成兒童窒息或跌傷。

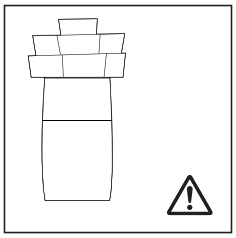

- 請勿將重物或危險物品（如：瓶子、餐具或盛有液體的物品）放置在電器設備的頂部。

1.4 Warnings for using

- Do not arbitrarily disassemble or reconstruct the refrigerator, or damage the refrigerant circuit; maintenance of the appliance must be conducted by a specialist.
- Damaged power cord must be replaced by the manufacturer, its maintenance department or related professionals in order to avoid danger.
- The gaps between refrigerator doors and between doors and refrigerator body are small, be noted not to put your hand in these areas to prevent from squeezing the finger. Please close it gentle when close the refrigerator door to avoid falling contents.
- Do not pick foods or containers with wet hands in the freezing chamber when the refrigerator is operating, especially metal containers in order to avoid frostbite.
- Do not allow any child to get into or climb the refrigerator; otherwise suffocation or falling injury of the child may be caused.
- Please do not put heavy or dangerous objects on top of the appliance. (bottles, tableware, or something containing liquid)

1.5 放置物品相關事項

· 請不要將易燃、易爆、易揮發和强腐蝕性物品放入電器，以免導致產品損壞或火災等事故。

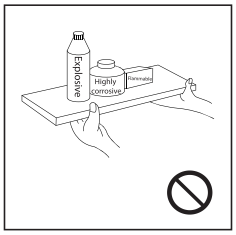

· 請不要在雪櫃附近放置或使用可燃性物品，以免發生火災。

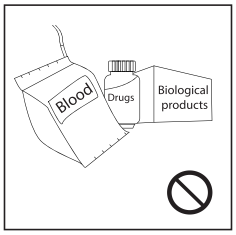

· 本雪櫃為家用電雪櫃，家用雪櫃只適用於儲藏食品，不能用於其他用途，如儲藏血液、藥品和生物製品等。

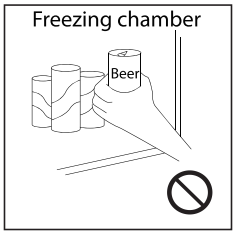

· 請不要將瓶裝或密閉容器內的所含液體如瓶裝啤酒、飲料等放入冷凍室，以免凍結爆裂導致其他損失。

1.5 Warnings for placement

· Do not put flammable, explosive, volatile and highly corrosive items in the refrigerator to prevent damages to appliances or stored articles or fire accidents.

· Do not place flammable items near the refrigerator to avoid fires.

· The refrigerator is intended for household use, such as storage of foods; it shall not be used for other purposes, such as storage of blood, drugs or biological products, etc.

· Do not store beer, beverage or other fluid contained in bottles or enclosed containers in the freezing chamber of the refrigerator; or otherwise the bottles or enclosed containers may crack due to freezing to cause damage to appliances or stored articles.

1.6 能耗警示

· 當食物放置在為製冷電器設備設計的温度範圍的冷電位端以下較長時間時，製冷設備可能無法持續運行。（可能會使冷凍室内的儲藏物解凍或者使冷凍室内的温度過高）。

· 請勿將起泡性飲料存放在食品冷凍室或冷凍櫃中或低温冷藏室或冷藏櫃中，也不要飲用太凉飲料。

· 對於任何種類的食品，特別是對於在食品冷凍室或冷凍櫃和冷凍食品儲藏室或儲藏櫃中的商用速凍食品，請勿超過食品製造商推薦的儲存時間。

1.6 Warnings for energy

· Refrigerating appliances might not operate consistently (possibility of defrosting of contents or temperature becoming too warm in the freezing chamber) when sited for an extended period of time below the cold end of the range of temperatures for which the refrigerating appliance is designed.

· Effervescent drinks should not be stored in food freezer compartments or containers or in low-temperature compartments or containers, and that should not be consumed too cold.

· Do not exceed the storage time(s) recommended by the food manufacturers for any kind of food and particularly for commercially quick-frozen food in food-freezer and frozen-food storage compartments or containers.

・為了防止在製冷電器設備解凍時冷凍食品的温度過高，應採取一些預防措施，如：將冷凍食品包裝在幾層報紙中。

・在手動解凍，維護或清洗過程中，冷凍食品的温度升高可能會縮短冷藏壽命。

・To prevent an undue rise in the temperature of the frozen food while defrosting the refrigerating appliance, it should take precautions such as wrapping the frozen food in several layers of newspaper.

・A rise in temperature of the frozen food during manual defrosting, maintenance or cleaning could shorten the storage life.

1.7 廢棄時相關事項

・該雪櫃使用的製冷劑和環戊烷發泡材料均為可燃性材料，廢棄雪櫃應與火源隔絕，不能燃燒處理。請交給具有資質的專業回收公司處理。以避免對環境造成危害或引發其他危險。





・當雪櫃報廢時，請拆下雪櫃門及其密封件。請將架子放在適當的地方，以免任何孩子被卡住。

1.7 Warnings for disposal

・Refrigerant and cyclopentane foaming material used for the refrigerator are flammable. Therefore, when the refrigerator is scrapped, it shall be kept away from any fire source and be recovered by a special recovering company with corresponding qualification other than be disposed by combustion, so as to prevent damage to the environment or any other harm.

・When the refrigerator is scrapped, disassemble the doors, and remove the seal; leave the shelves in a proper place, so as to prevent trapping of any child.

2. 如何正確使用雪櫃

2.1 正確放置雪櫃

· 在初次啟動之前，請先將雪櫃靜置兩個小時，然後再接通電源。

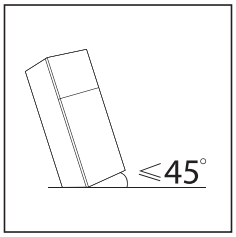

· 在移動雪櫃之前，請將雪櫃內的所有物品取出，用膠帶固定玻璃隔板，蔬菜架，冷凍室抽屜等部件，並擰緊可調節高度架；關上雪櫃門，然後用膠帶密封。在移動過程中，電器設備不得過度倒置或水平放置或受到震動；在移動過程中，傾斜角不得超過 45° 。

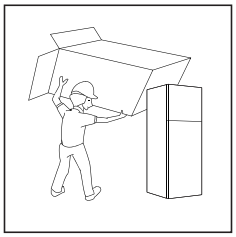

· 使用前，請拆除雪櫃內的所有包裝材料，其中包括：底墊、泡沫墊和膠帶；撕下雪櫃門和箱體上的保護膜。請遠離熱源並避免陽光直射。請勿將本產品放置在潮濕或有水的地方，以防生鏽或降低絕緣效果。

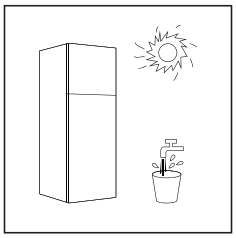

· 不要用水噴淋，沖洗雪櫃，也不要將其放置在潮濕，易濺上水的地方，以免影響雪櫃產品的電器絕緣性能。

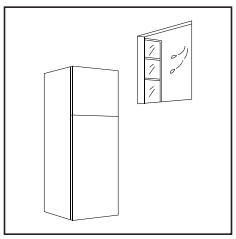

· 將雪櫃放置在室內通風良好的地方，地面平坦，堅固（如有不平穩，可向左或向右旋轉調整腳水平）。

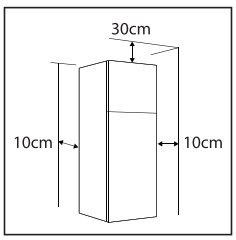

· 雪櫃頂部空間大於 30cm，兩側及背部與墻的距離大於 10cm，便於雪櫃門的開合和熱量散熱。

2. Proper use of the refrigerator

2.1 Placement

· Before initial start, keep the refrigerator still for two hour before connecting it to power supply.

· Before the refrigerator is moved, take all objects inside out, fix the glass shelves, freezing chamber drawers and etc. with tape, and tighten the leveling feet; close the doors and seal them with tape. During moving, the appliance shall not be laid upside down or horizontally, or be vibrated; the inclination during movement shall be no more than 45°.

· Before use, remove all packing materials, including bottom cushions, foam pads and tapes inside of the refrigerator; tear of the protective film on the doors and the refrigerator body. Keep away from heat and avoid direct sunlight. Do not place the appliances in moist or watery places to prevent rust or reduction of insulating effect.

· Do not spray of liquid and etc. or wash the refrigerator; do not put the refrigerator in moist places easy to be splashed with water so as not to affect the electrical insulation properties of the refrigerator.

· The refrigerator should placed in a well-ventilated indoor place; the ground shall be fat, and sturdy (rotate left or right to adjust the leveling feet for leveling if unstable).

· The top space of the refrigerator shall be greater than 30cm, and the refrigerator should be placed against a wall with a free distance more than 10cm to facilitate heat dissipation.

安裝前提示：

在嘗試安裝或調試之前，必須保證雪櫃未接上電源。請做好防護，以防門把手掉落造成人身傷害。



Precautions before installation:

Precautions before installation: Before installation or adjusting of accessories, it shall be ensured that the refrigerator is disconnected from power.Precautions shall be taken to prevent drop out of the handle from causing any personal injury.

2.2 調整雪櫃平衡

調節步驟：

a. 底腳順時針旋轉升高雪櫃；

b. 底腳逆時針旋轉降低雪櫃；

c. 根據上述步驟，將雪櫃兩底腳調節至水平高度即可。

2.2 Leveling feet

Adjusting procedures:

a. Turn the feet clockwise to raise the refrigerator;

b. Turn the feet counterclockwise to lower the refrigerator;

c. Adjust the right and left feet based on the procedures above to a horizontal level.

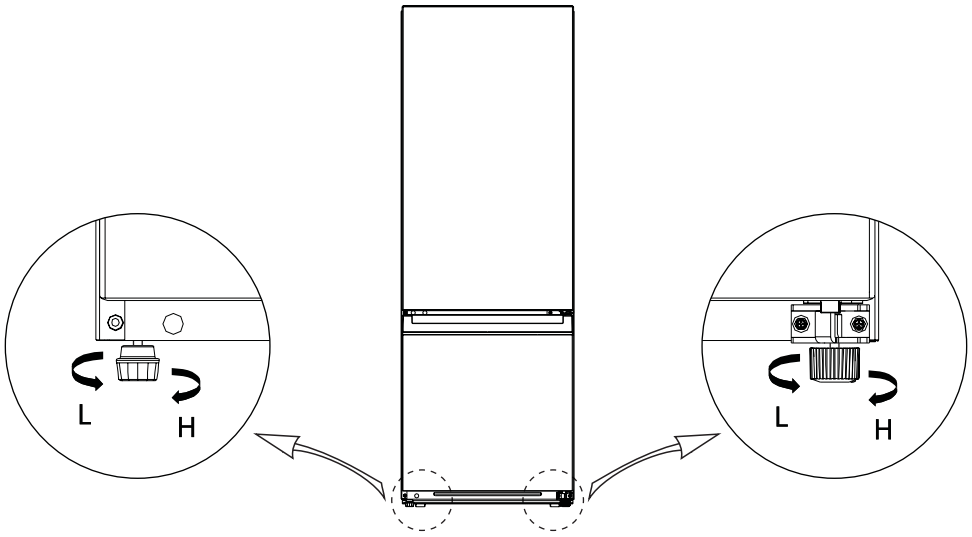

（以上圖片僅供參考，實際配置以購買實物或銷售商聲明為準）

(The picture above is only for reference. The actual configuration will depend on the physical product or statement by the distributor)

2.3 燈部品更換

LED 指示燈的任何更換或維修均應由製造商及其服務代理商或具有類似資歷的人員負責進行。

2.3 Changing the Light

Any replacement or maintenance of the LED lamps is intended to be made by the manufacture, its service agent or similar person.

2.4 啟動

· 雪櫃首次啟動請靜置兩小時後再插上電源。

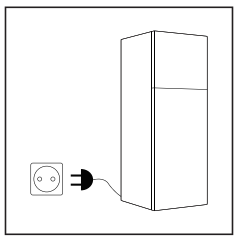

2.4 Starting

· Before initial start, keep the refrigerator still for two hours before connecting it to power supply.

- 在裝入新鮮或冷凍食品前，先讓雪櫃運行 2~3 小時；夏季環境溫度較高，應先讓雪櫃充分運行 4 小時以上。
- 為保障開門順暢及抽屜等取出方便，請預留足夠的空間或以銷售商聲明為準。

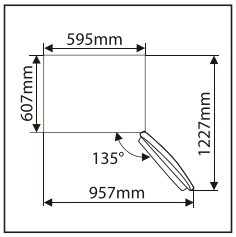

- Before putting any fresh or frozen foods, the refrigerator shall have run for 2-3 hours, or for above 4 hours in summer when the ambient temperature is high.
- Spare enough space for convenient opening of the doors and drawers or spare statement by the distributor.

2.5 節能提示

- 應將電器設備設置在室內最凉爽的地方，遠離加熱器或加熱管，並避免陽光直射。
- 在將熱食放入電器設備之前，請將其冷卻至室温。設備過載會迫使壓縮機運行更長的時間。冷凍太慢的食物可能會變質或變壞。
- 確保正確包裝食物，並將容器擦干，然後再將其放入電器設備中。這樣可以減少電器設備內部的積霜。
- 電器設備儲物箱不應襯有鋁箔、蠟紙或紙巾。內襯會干擾冷空氣循環，從而降低電器設備的效率。
- 整理好食物並貼上標籤，以減少開門次數並擴大搜索範圍。一次性取出盡可能多的物品，並盡快關閉雪櫃門。

2.5 Energy saving tips

- The appliance should be located in the coolest area of the room, away from heat producing appliances or heating ducts, and out of the direct sunlight.
- Let hot foods cool to room temperature before placing in the appliance. Overloading the appliance forces the compressor to run longer. Foods that freeze too slowly may lose quality, or spoil.
- Be sure to wrap foods properly, and wipe containers dry before placing them in the appliance. This cuts down on frost build-up inside the appliance.
- Appliance storage bin should not be lined with aluminum foil, wax paper, or paper toweling. Liners interfere with cold air circulation, making the appliance less efficient.
- Organize and label food to reduce door openings and extended searches. Remove as many items as needed at one time, and close the door as soon as possible.

3. 產品結構和功能

3.1 關鍵部件

3. Structure and functions

3.1 Key components

GR-RB410WE

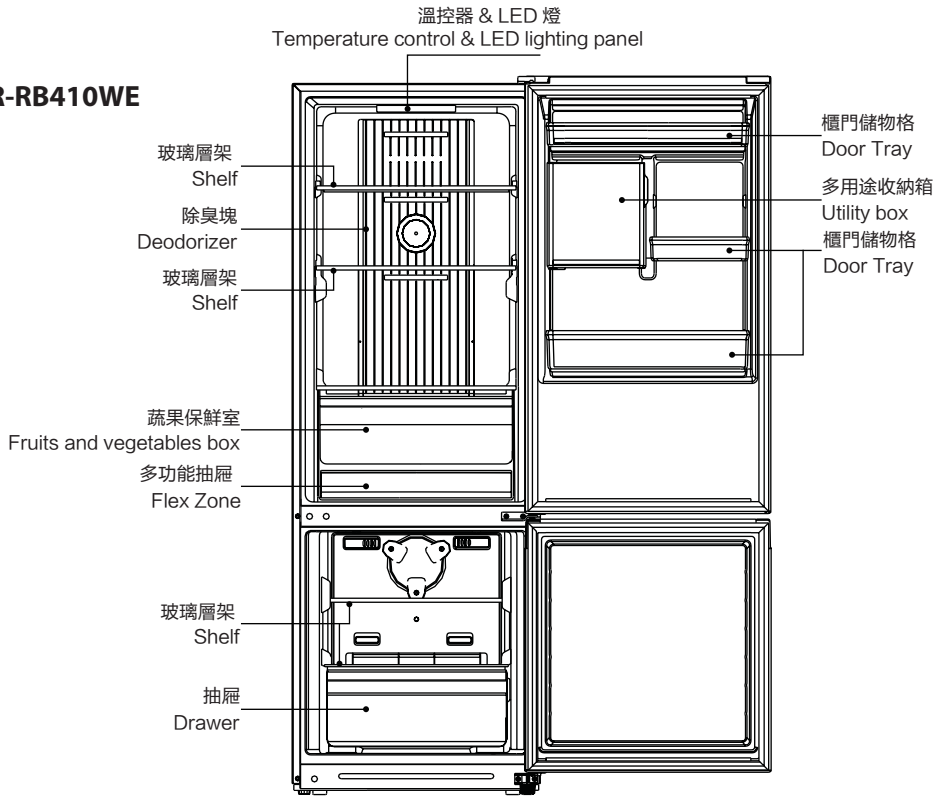

GR-RB405WE

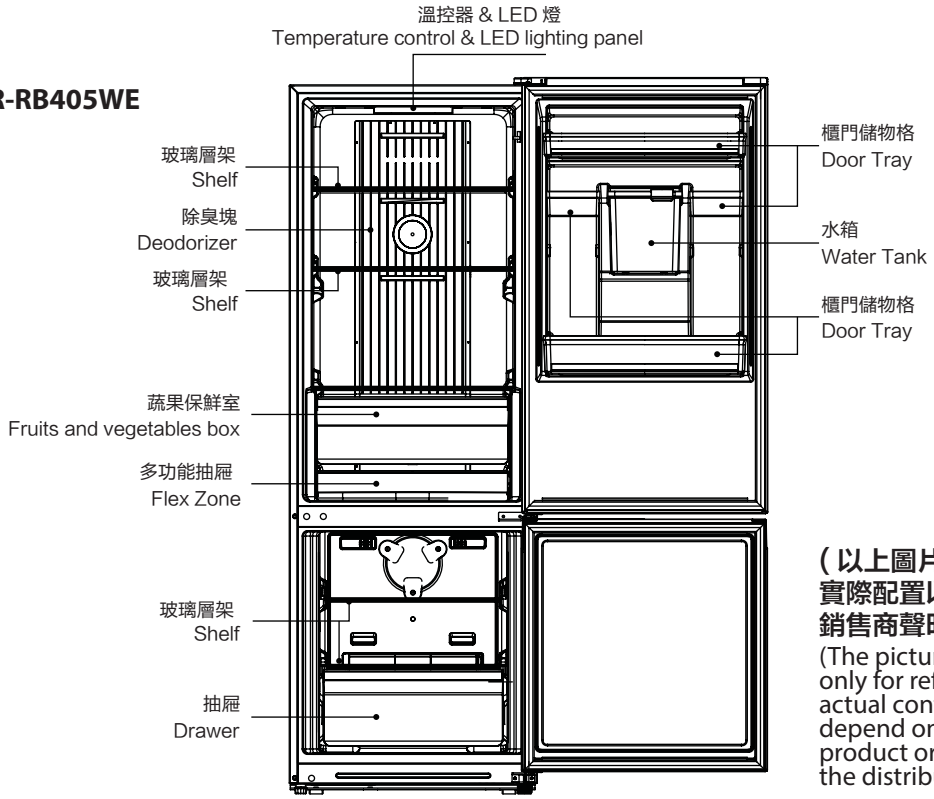

(以上圖片僅供參考，實際配置以購買實物或銷售商聲明為準)

(The picture above is only for reference. The actual configuration will depend on the physical product or statement by the distributor)

冷藏室

· 冷藏室適宜存放各種水果、蔬菜、飲料等短期内食用的食品。

· 烹調類食品冷卻至室温後放入冷藏室冷藏。

· 食品在放入本電器產品之前最好將其密封起來。

· 玻璃層架可以上下活動調整位置來達到合理的儲存空問，方便使用。

冷凍室

· 冷凍室低温可以長時間保持食品新鮮狀態。主要用來儲存冷凍食品及製作冰塊。

· 冷凍室適宜存放肉類、魚蝦等短期不食用的食品。

· 大塊的肉類盡量分割成小塊再放入，便於取用。

· 請注意在產品有效保質期内食用。

Refrigerating chamber

· The Refrigerating chamber is suitable for storage of a variety of fruits, vegetables, beverages and other food consumed in the short term.

· Cooking foods shall not be put in the refrigerating chamber until cooled to room temperature.

· Foods are recommended to be sealed up before putting into the refrigerator.

· The glass shelf can be adjusted up or down for a reasonable amount of storage space and easy use.

Freezing chamber

· The freezing chamber may keep food fresh for a long time and it is mainly used to store frozen foods and making ice.

· The freezing chamber is suitable for storage of meat, fish, rice balls and other foods not to be consumed in short term.

· Chunks of meat are recommended to be divided into small pieces for easy access.

· Please be noted food shall be consumed within the shelf time.

3.2 功能介紹

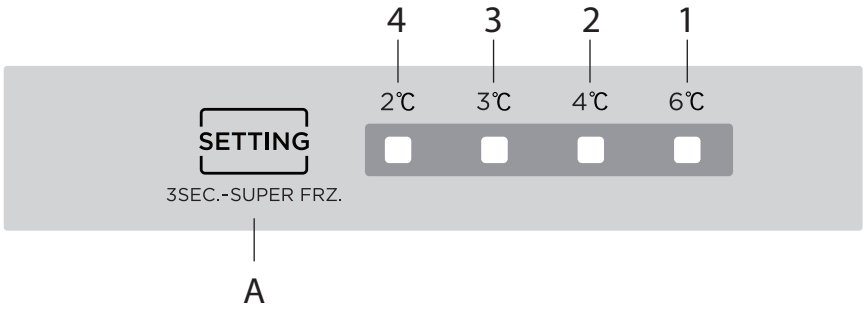

（以上圖片僅供參考，實際配置以購買實物或銷售商聲明為準）

1）操作按鍵
A: 冷藏室溫度設置按鍵

2）顯示屏
LED1：設定 1（6°C）
LED2：設定 2（4°C）
LED3：設定 3（3°C）
LED4：設定 4（2°C）

3) 顯示
雪櫃初次上電時，顯示畫面會全部顯示 3 秒鐘，接著雪櫃將按據設定 2（4°C）運行。發生故障時，相應的 LED 燈閃亮。
無故障時，則顯示雪櫃溫度設定。

指示	故障描述
LED 1 閃爍	環溫傳感器故障
LED 3 閃爍	冷凍室化霜傳感器故障
LED 4 閃爍	冷藏室溫度傳感器故障

4) 溫度設定
每按一次溫度設定按鍵 (A)，溫度設定改變一次。
溫度設定完成後，15 秒後雪櫃按照設定值運行。

3.2 Functions

(The picture above is only for reference. The actual configuration will depend on the physical product or statement by the distributor)

1) Operation button
A : Temperature setting button of refrigerator compartment

2) Temperature control panel
LED1：setting 1（6°C）
LED2：setting 2（4°C）
LED3：setting 3（3°C）
LED4：setting 4（2°C）

3) Indicator
When electrify the refrigerator for rst time, all LEDs on the indicat or light up fully for 3 seconds, and then the refrigerator runs according to setting 2(4°C).In case of a failure, the corresponding LED blinks.
In case of no failure, it shows the current temperature setting of refrigerator.

Indication	Fault Description
LED 1 blinks	Ambient temperature sensor failure
LED 3 blinks	Defrost sensor failure of freezer chamber
LED 4 blinks	Temperature sensor failure of refrigerating chamber

4) Temperature setting
Each time the temperature setting button A is pressed once, the temperature setting changes one time. After the temperature setting has been completed, the refrigerator will run according to
the setting after 15s.



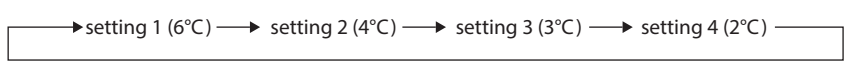

5) 速凍模式設定
長按SET鍵3秒,LED 2和 LED 3同時亮起，30 秒進入速凍模式，

冰箱將在40小時後自動退出速凍模式。長按溫度設置鍵3s可取消速凍模式。
一次性將大量冷凍食品放入冷凍室時，建議提前12小時開啟冷凍模式。

5) Super freeze mode
Long press temperature setting button for 3s, after LED 2 and LED 3 light up for 30s, it will enter into Super freeze mode.
The appliance will automatically exit super freeze mode after 40 hours. Long Press temperature setting Key for 3s could cancel Super freeze mode.
It is suggested to turn on super freeze mode for 12 hours before placing large amout of frozen food in freezer compartment at one time.

6) 冷凍室温度調節撥片

位於蔬果保鮮室後面靠左側位置，撥片的出廠位置位於右側。

撥片往左移動，冷藏室溫度可能會升高，所以建議不要移動撥片的位置。當周圍環境偏低時，冷凍室的溫度無法被檢出，當冷凍室溫度上升時，通過調整撥片可以解決此問題。

6) Temperature adjustment knob for freezer chamber
This knob is located at left side behind of Fruits and vegetables box. The initial position of this knob is positioned at right side.
If you move to left side, there is a possibility that temperature in the refrigeration chamber will increase, so it is usually recommended to keep it as is. The ambient temperature is low, the temperature of the freezing chamber is not detected, when the temperature of the freezing chamber rises, adjusting the Temperature adjustment knob may resolve the issue.

7) 多功能抽屜温度調節滑蓋
滑蓋可以控制多功能盒區域的温度，該區域可以實現肉類、飲料的快速降温。滑蓋位於蔬果保鮮室背部中間位置，出廠位置位於最右側。撥片往左滑動，多功能抽屜温度下降。可以通過移動撥片的位置來調節多功能抽屜温度。需要實現肉類 / 飲料快速降温時，建議冷藏温度設置爲 2°C，該滑蓋位於最左側，以達成最佳保鮮 / 降温效果。

7) Temperature adjustment slider for Flex Zone.
The slider can adjust the temperature of the Flex Zone which can realize the rapid cooling of meat and beverages.This slider is located at center behind of Fruits and vegetables box .The initial position of this slider is positioned at right side. If you move to left side, the temperature of Flex Zone reduce.
If you move to right side, the temperature of Flex Zone increases. You can adjust the temperature with position of this slider.When it is necessary to achieve rapid cooling of meat and beverages, it is recommended to set the refrigeration temperature to 2°C, and the slider is located on the far left side to achieve the best preservation and cooling.

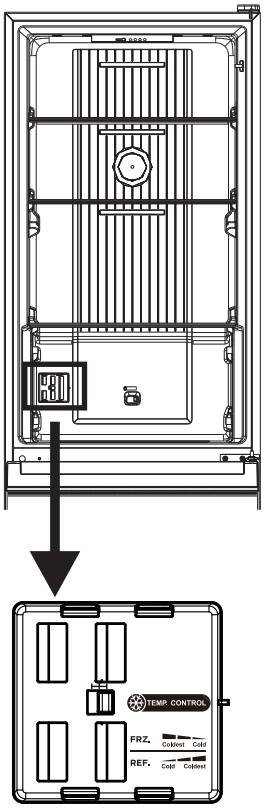

溫度調節撥片
Temperature adjustment knob

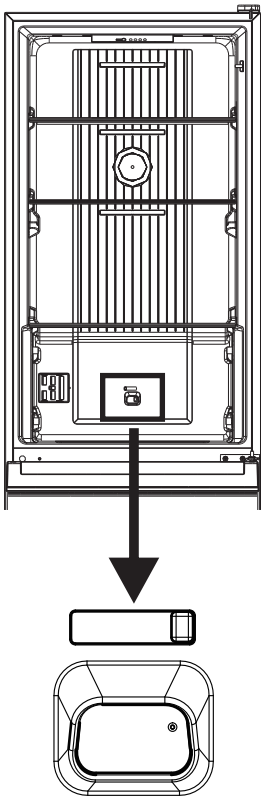

溫度調節滑蓋
Temperature adjustment slider

3.3 多功能抽屜

多功能抽屜可以從下圖左邊的位置移至右邊的位置

3.3 Flex Zone

Flex Zone can change position from left to right as shown in the figure below

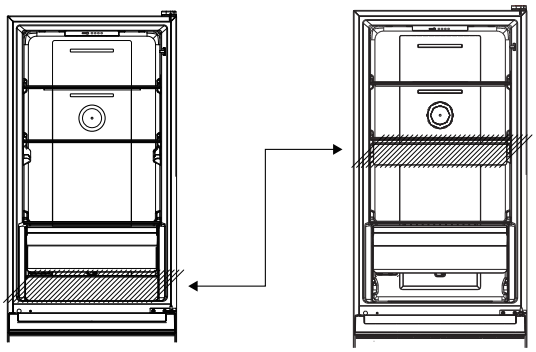

3.4 摺疊玻璃層架

1. 抬起層架 (2)，層架 (1) 沿着箭頭方向移動 .

2. 分離層架 (1) 與層架 (2).

3. 抬起層架 (1) 前端，層架 (2) 沿着箭頭方向移動 .

4. 層架 (2) 移動至層架 (1) 下方，要求層架 (2) 移動至冷藏室中間位置，如圖 2 所示 .

5. 層架 (2) 與層架 (1) 疊放到一起，則操作完成 .

6. 將摺疊後的層架推至冷藏室限位處 .

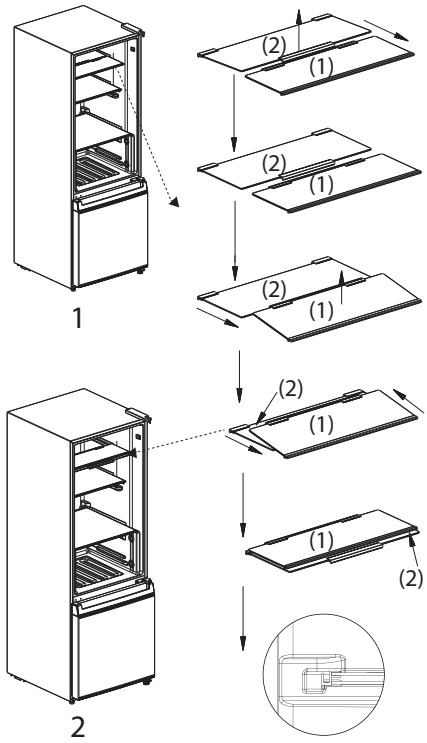

3.4 Folding glass shelf

1. Raise the shelf (2), and move the shelf (1) in the direction of the arrow.

2. The shelf (1) is separated from the shelf (2).

3. Raise the front end of the shelf (1) , and move the shelf (2) in the direction of the arrow.

4. The shelf (2) is moved to the bottom of the shelf (1), and the shelf (2) is required to move to the middle of the refrigeration room,as shown in Figure 2 on the left.

5. Stack the shelf (2) and shelf (1) together, and push to the limit of the liner. Folding operation completed.

6. Push the folded shelf to the limit of the refrigeration room.

警告
展開玻璃層架時，要確保層架 (1) 和 (2) 連接牢靠，如果未連接牢靠，可能會造成層架掉落.

展開後的玻璃層架狀態如下：

Warning
When reassembling shelf (1) and shelf (2), make sure to connect the frames securely. If it is not securely connected, it may cause the shelves to fall off.
The state of the unfolded glass shelf is as follows:

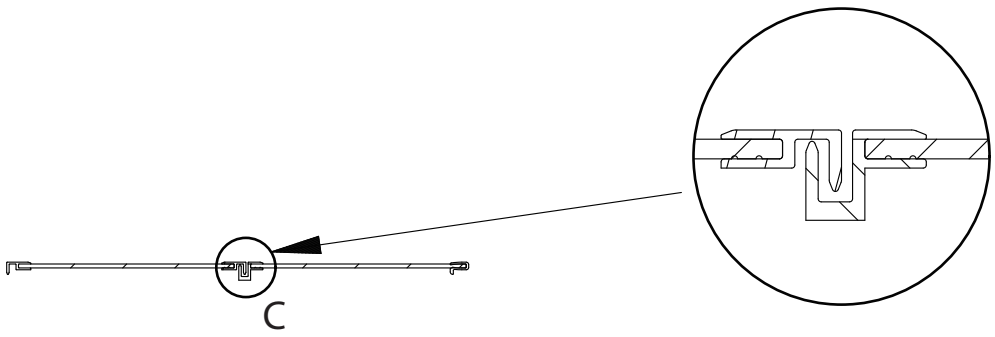

玻璃層架增加絲印區分內外，帶有絲印的層架位於冷藏室外側。
絲印位置以及樣式如下圖所示：

The glass shelf is added with silk screen to distinguish the inside and outside, and the shelf with silk screen is located outside the refrigerated room.
The silk screen position and style are shown in the figure below:

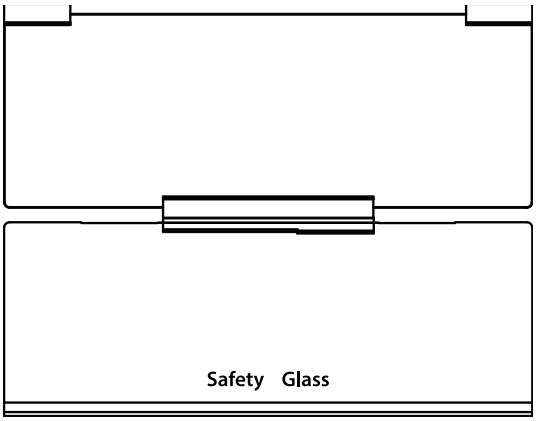

3.5 飲水機

適用於（GR-RB405WE）

3.5 Water dispenser

(only for GR-RB405WE)

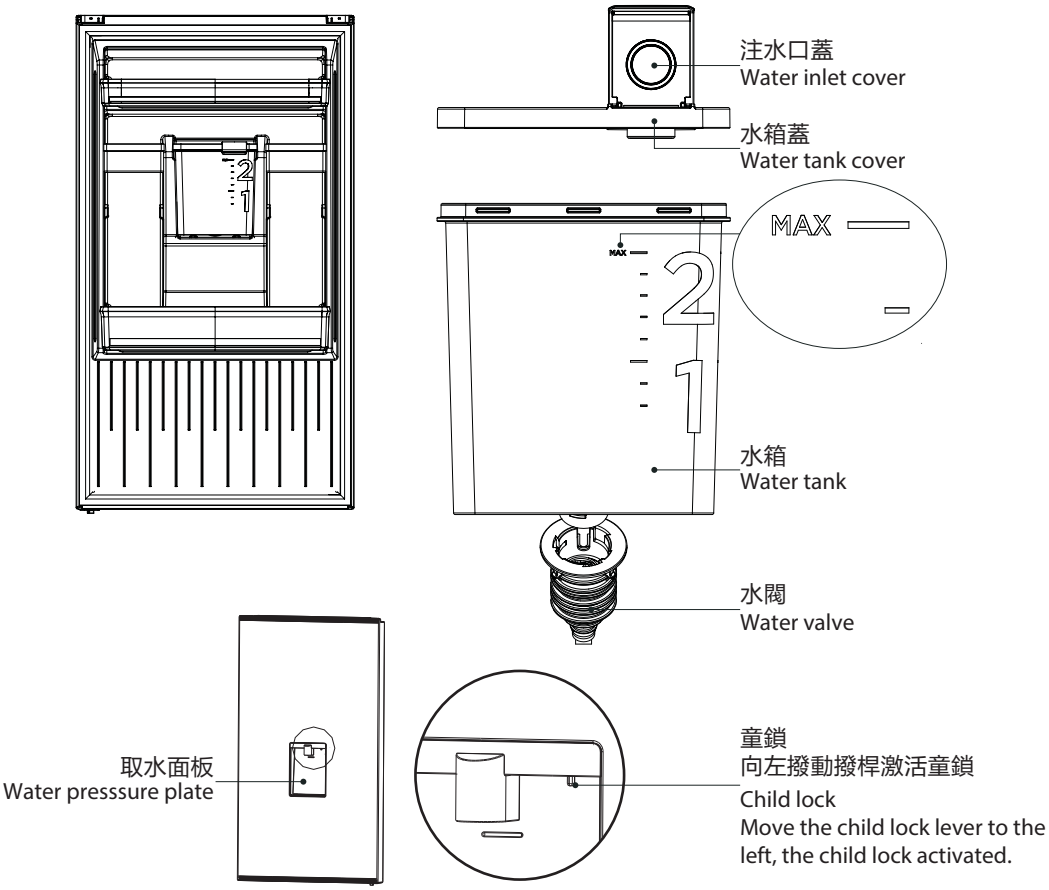

（以上圖片僅供參考，實際配置以購買實物或銷售商聲明為準）

(The picture above is only for reference. The actual configuration will depend on the physical product or statement by the distributor)

1. 首次打開水箱蓋，加水至水箱上標注的最大刻度處。
2. 按壓取水面板，水會流出；鬆開取水面板，水停止流出。

1. First open water inlet cover, fill with potable water to"MAX"marked as the maximum amount of water.
2. Press the water pressure plate inward, and the water flow will flow out.
Release the water pressure plate and the water flow will stop flowing out.

警告

- 飲水機僅僅適用於飲用水，不適用於固體以及飲料。
- 不要直接從門體上拆下水箱加水。

Warning

- Water dispenser can only be used for potable water, not suitable for liquids other than potable water such as juices.
- Please do not remove the water tank from the door directly for water filling.

4. 維護及保養

4.1 整體清潔

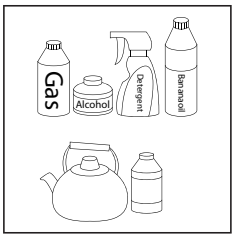

- 雪櫃背後及周圍的灰塵請按時清理，以提高散熱效果，同時利于節能。
- 定期檢查門封條，確保清潔没有雜物。用蘸有肥皂水或稀釋後的清潔劑的軟布清潔門封條。
- 雪櫃内部應經常清潔以免產生異味。
- 清潔雪櫃内部前請先關掉電源，取出所有食物，酒飲，玻璃層架，抽屉等。
- 清潔雪櫃内部請使用軟布或者海綿，可以用兩湯匙小蘇打和一公升温水溶液先清潔一遍，再用清水清洗並擦拭乾淨，清潔完畢後打開門體自然乾燥後再接通電源。
- 對於雪櫃内不易清潔區域（如窄小的夾層、縫隙或拐角），建議用軟布、軟毛刷等和一些必要的輔助工具(如細棍等)進行定期清潔，確保無污染物或細菌聚集。

4. Maintenance and care of the appliance

4.1 Overall cleaning

- Check the door seals regularly to make sure there are no debris.
- Clean the door seals with a soft cloth dampened with soapy water or diluted detergent.
- The interior of the refrigerator should be cleaned regularly to avoid odor.
- Please turn off the power before cleaning interior, remove all foods, drinks, shelves, drawers, etc.
- Use a soft cloth or sponge to clean the inside of the refrigerator, with two tablespoons of baking soda and a liter of warm water. Then rinse with water and wipe clea the door and let it dry naturally before turning on the power.
- For areas that are difficult to clean in the refrigerator (such as narrow sandwiches area, gaps or corners), it is recommended to wipe them regularly with a soft rag, soft brush, etc. and when necessary, combined with some auxiliary tools (such as thin sticks) to ensure no contaminants or bacterials accumulation in these areas.

· 不要使用肥皂，清潔劑，噴霧清潔劑等清潔內部，因爲這些可能會產生異味或污染食物。用蘸有肥皂水或稀釋後的清潔劑的軟布清洗瓶框，玻璃層架和抽屉等，然後用軟布擦乾或自然晾乾。用蘸有肥皂水，清潔劑等的軟布擦拭雪櫃表面，然後用軟布擦乾。

· 清潔時請勿使用硬質毛刷、鋼絲球、鋼絲刷、研磨劑（如牙膏）、有機溶劑（如酒精、丙酮、香蕉水等）、開水、鹼性物品，有可能會損傷雪櫃表面及內膽。沸水和苯等有機溶劑可能使塑料部件變形或損毀。

· 清潔時不要用水或其他液體直接沖洗，以免浸泡後造成短路或影響電器絕緣性能。

· Do not use soap, detergent, scrub powder, spray cleaner, etc., as these may cause odors in the interior of the refrigerator or contaminated food. Clean the door tray, shelves and drawers with a soft cloth dampened with soapy water or diluted detergent. Dry with a soft cloth or dry naturally.

· Do not use hard brushes, wire wool, wire brushes, abrasives (such as toothpastes), organic solvents (such as alcohol, acetone, banana oil, etc.), boiling water, acid or alkaline items, which may damage the fridge surface and interior. Boiling water and organic solvents such as benzene may deform or damage plastic parts.

· Do not rinse directly with water or other liquids during cleaning to avoid short circuits or affect electrical insulation after immersion.

雪櫃進行除霜和清潔時，請先拔下電源



Please unplug the refrigerator for defrost and cleaning.

4.2 除霜

· 此雪櫃為風冷原理雪櫃，有自動除霜功能。由於季節或溫度變化，電器內部會有結霜現象，可通過斷電或乾淨毛巾擦拭方式進行手動除霜。

4.2 Defrosting

· The refrigerator is made based on the indirect cooling system and thus has automatic defrosting function. Frost formed due to change of season or temperature may also be manually removed by disconnection of the appliance from power supply or by wiping with a dry towel.

4.3 玻璃層架清潔

· 稍微向上抬起玻璃層架後部並向外拉出;

4.3 Cleaning the glass shelf

· Lift up the rear of the glass shelf slightly and pull it out.

- 完全打開櫃門，以確保玻璃層架不會撞到櫃門；
- 取出玻璃層架，根據需要進行清潔；
- 按取出逆方向安裝玻璃層架即可。

- Fully open the door and take it out so that the inside of the door and the shelf do not bump.
- Take out the glass shelf and clean it as needed.
- Install the glass shelf in the reverse method of the removal.

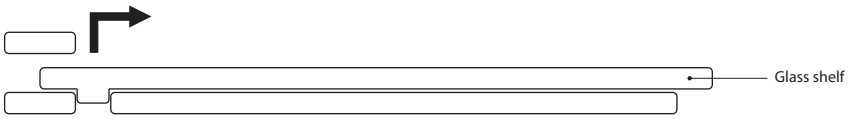

4.4 多用途收納箱清潔

適用於（GR-RB405WE）

- 取下櫃門上儲物格。
- 向上抬起多用途收納箱。
- 取下多用途收納箱並根據需要進行清潔。
- 逆操作安裝多用途收納箱。
- 多用途收納箱不能安裝到右側 , 打開雪櫃門後，一手扶住雪櫃，另一邊輕拉旋轉多用途收納箱蓋上的把手即可打開多用途收納箱蓋。
- 多用途收納箱使用完後需關好旋轉盒蓋才可以關上雪櫃門。

4.4 Cleaning and use of utility box

(only for GR-RB405WE)

- Take out the door tray in the upward side of the utility box.
- Lift the utility box and take out outward.
- Take out the utility box, and clean it as required.
- Install is the reverse operation.
- Utility box cannot install on the right side area.
- After opening the refrigerator compartment door, hold the refrigerator compartment door with one hand, and gently pull the handle on the lid of the revolving utility box with the other hand to open the lid of the utility box.
- After using the utility box, you need to close the rotating lid before closing the refrigerator compartment door.

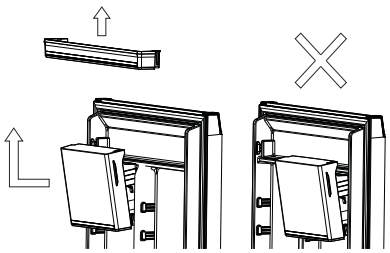

4.5 飲水機的使用與清潔

適用於（GR-RB405WE）

- 向上抬起水箱。
- 取下水箱並根據需要進行清潔。
- 逆操作安裝水箱

4.5 Water dispenser use and cleaning

(only for GR-RB405WE)

- Lift the water tank.
- Take out the water tank, and clean it as required.
- Install is the reverse operation.

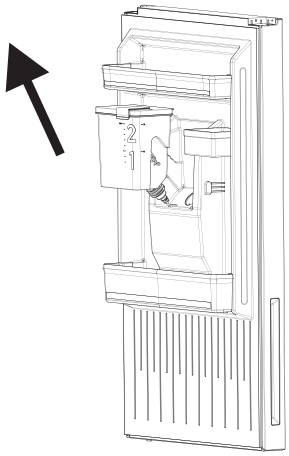

4.6 停止使用時

- 停電時：即使在夏季，食品仍然可以保存幾個小時；期間應盡量減少開門次數，不宜再放入新鮮食品。
- 長時間不使用時：應拔下電源，再對電器進行清潔，並保持雪櫃門敞開，以防止其產生不良氣味。

4.6 Out of operation

- Power failure: In case of power failure, even if it is in summer, foods inside the appliance can be kept for several hours; during the power failure, the times of door opening shall be reduced, and no more fresh food shall be put into the appliance.
- Long-time nonuse: The appliance shall be unplugged and then cleaned; then the door are left open to prevent odor.

雪櫃一但開啟就要連續運行，不能被中斷，否則雪櫃功能可能會受到影響．

The appliance shall run continuously once it is started.

Generally, the operation of the appliance shall not be interrupted; otherwise the service life may be impaired.

4.7 製冰盒（選配）

- 製冰盒在使用之前應清洗；
- 加入適量的水至冰盒的水位線處，然後將製冰盒放置於製冰區域；
- 製冰完成後，按下製冰盒上的按鍵使冰格扭轉，冰塊落入儲冰盒中；
- 向上取出製冰機後即可取儲冰盒中的冰塊。

4.7 Ice making box (optional)

- The ice making box should be cleaned before use;
- Add an appropriate amount of water to the water level line on the ice tray, and then place the ice making box in the ice making area;
- After ice making, press the button on the ice making box to twist the ice tray and the ice cubes fall into the ice storage box;
- Take out the ice cubes from the ice storage box after taking out the ice maker upward.

1.加入適量的水
1. Add an appropriate amount of water

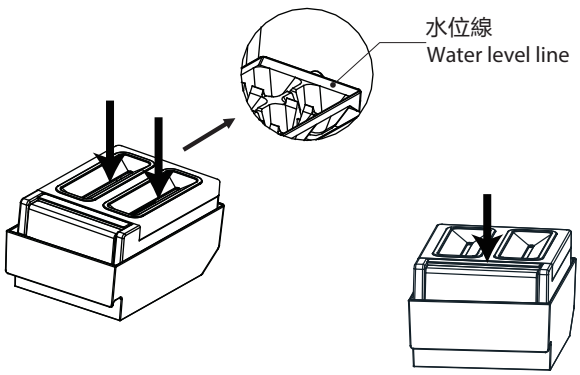

2. 製冰後按下按鈕
2. press the button after the ice making is finshed

3.向上取出製冰機後即可取冰
3. Take out the ice after take out the ice maker upward

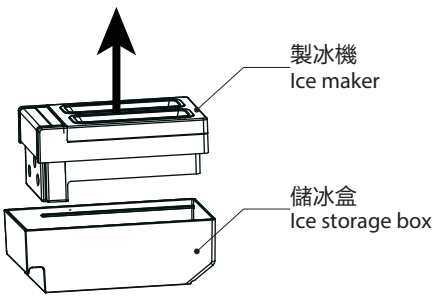

4.8 大顆粒製冰格

- 製冰格在使用之前應清洗消毒；
- 加入適量的水至製冰格的水位線處，然後將製冰盒放置於製冰區域；
- 製冰完成後，取出並扭轉製冰格即可取冰。

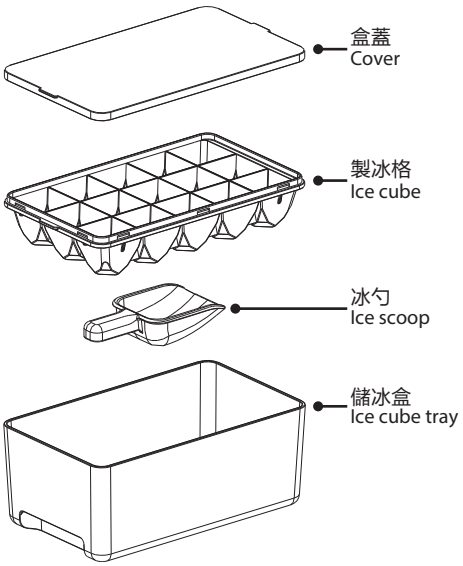

警告

- 請不要加入過量的水溢過水位線和直接將水放到儲冰區域製冰。
- 請不要注入熱水、飲料等非飲用水的液體。
- 長時間不使用的情況下，應廢棄製冰格中的冰。

4.8 Large particle ice tray

- Ice cube tray should be cleaned before use.
- Add an appropriate amount of water to the water level line on the ice cube tray, and then place the ice tray in the ice making area.
- After ice making, remove and twist the ice cube tray to remove the ice cube.

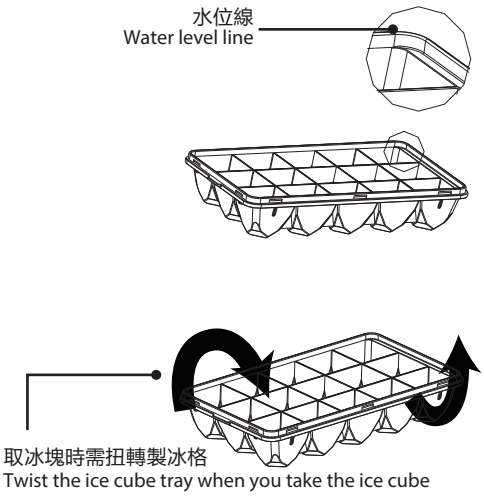

Warning

- Please do not add excess water to overflow the water level line and do not directly put the water into the ice storage box to make ice.
- Please fill with potable water only. Please do not fill hot water or liquids other than potable water such as juices.
- If not used for a long time, the ice cubes in the ice storage box, ice maker, ice cube tray should be discarded.

5. 答疑解惑

對以下一些簡單的問題，您可以嘗試自己動手解決。
若没有改善，請致電售後服務部門。

出現問題	可能造成原因 / 診斷
雪櫃不運作	電源是否接通，插頭是否插牢電 電壓是否過低 是否停電或者部分電路跳電
雪櫃有異味	有氣味的食品應該嚴密包住 檢查是否有食品腐爛 雪櫃內部需要清潔
壓縮機長時間工作	夏季環境溫度高，雪櫃運作時間長屬於正常現象 一次性放入食品不宜過多 食品冷卻後再放入雪櫃 開啟雪櫃門次數過於頻繁
雪櫃燈不亮	雪櫃是否通電，照明燈是否損壞 照明燈由專業人員更換
雪櫃門關不上	食物包裝卡住門使門無法關上 放入的食品太多使雪櫃歪斜
噪音大	地面是否平坦，雪櫃放置是否平穩 雪櫃附件是否放在正常位置
門封有縫隙	清除門封上異物 加熱門封使其冷卻後復原（用風筒或用熱毛巾）
接水盤溢水	箱內食品存放過多或水分過大，導致化霜水量大 門未關到位等原因導致空氣進入結霜，化霜產生的水增加
雪櫃外殼發熱	內置冷凝器在內部通過外殼散熱，屬於正常現象 環境溫度過高，存放食品過多或壓縮機停機時間段等導致外殼發熱，注意通風散熱
外表凝露	環境濕度過高時，箱體外表和門縫表面會有凝露現象屬於正常現象，用乾毛巾擦拭即可
雪櫃有異常噪音	嗡嗡聲：壓縮機工作時會產生嗡嗡聲，啟動或停機時聲音較大，屬於正常現象 吱吱聲：雪櫃內部製冷劑流動時會產生吱吱聲，屬於正常現象

5.Trouble shooting

Please try to solve the following simple problems by yourself.
If problem cannot be solved, please contact the service department.

Occurrence	Possible cause / inspection items
Operation failure	Check whether the appliance is connected to power or whether the plug is in well contact. Check whether the voltage is too low. Check whether there is a power failure or partial circuits have tripped.
Odor	Odorous foods shall be tightly wrapped. Check whether there is any rotten food. Clean the inside of the refrigerator.
Long-time operation of the compressor	Long operation of the refrigerator is normal in summer when the ambient temperature is high. It is not suggestible having too much food in the appliance at the same time. Food shall get cool before being put into the appliance. The doors are opened too frequently.
Lighting failure	Check whether the refrigerator is connected to power supply and whether the illumination light is damaged. Have the light replaced by a specialist.
Closing door failure	The doors is stuck by food packages. Too much food is placed the refrigerator is tilted.
Loud noise	Check whether the floor is level and whether the refrigerator is placed on stable ground. Check whether accessories are placed at proper locations.
Door is not properly sealed	Remove foreign matters on the door seal, Heat the door seals and then cool it for restoration. (or blow it with an electrical drier or use a hot towel for heating)
Overflowing water from pan	There is too much food in the freezing chamber or food stored contains too much water, resulting in heavy defrosting. The doors are not closed properly, resulting in frosting due to entry of air and increased water due to defrosting.
Hot cabinet	Heat dissipation of the built-in condenser via the cabinet, which is normal. When cabinet becomes too hot due to high ambient temperature, or storage of too much food, compressor shutdown. Ensure ventilation to facilitate heat dissipation.
Surface condensation	Condensation on the exterior surface and door seals of the refrigerator is normal, when the ambient humidity is too high. Wipe the condensate with a clean towel.
Abnormal noise	Buzz: The compressor may produce buzzes during operation, and the buzzes are loud particularly upon start or stop, which is normal. Creak: Refrigerant flowing inside of the appliance may produce creak, which is normal.

6. 產品廢棄處理

正確處理該產品：
這種標誌表示在整個歐盟中，產品不宜與其他家庭垃圾一併處理。為免因不受控制的垃圾處理而對環境或人身健康造成潛在傷害，回收垃圾以促進材料資料的可持續重複利用。要想回收用過的設備，請使用回收或收集系統或聯繫產品零售商。他們可以確保該產品回收環保安全。

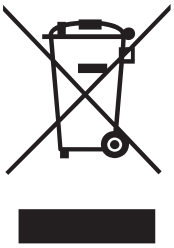

6. Disposal of your appliance

Correct Disposal of this product:
This marking indicates that this product should not be disposed with other house hold wastes throughout the EU.
To prevent possible harm to the environment or human health from uncontrolled waste disposal, recycle it responsibly to promote the sustainable reuse of material resources.
To return your used device, please use the return and collection system or contact the retailer where the product was purchased. They can take this product for environmental safe recycling.

氣候類型
本款電器設備設計用於在由銘牌上標明其類別指定的環境溫度下投入運行。

AMBIENT TEMPERATURE
This appliance is designed to operate in ambient temperature specified by its category marked on the rating plate.

氣候類型 **Climate category**	環境溫度（從…到…） **Ambient temperature (from...to...)**
SN	+10°C to +32°C
N	+16°C to +32°C
ST	+16°C to +38°C
T	+16°C to +43°C