## Summary

1. Instruction and Use ..... 34
1.2 Environment ..... 35
1.3 Safety Standards ..... 36

2. Usage instructions ..... 39
2.1 Temperature adjustment ..... 39
2.2 Usage recommendations ..... 42
2.3 Defrosting ..... 43

3. Maintenance ..... 43
3.1 Low voltage protection ..... 44

4 Installation Warnings ..... 45
4.1 Installation ..... 47
4.2 Ventilation ..... 48
4.3 Door Panelling ..... 48
4.4 Door Reversibility ..... 48
4.5 Electrical Connections ..... 49
4.6 Size of the electrical cables ..... 50

5 Technical data (standard configurations) ..... 50

6 Troubleshooting ..... 51

7 Display Diagnostics ..... 54

8 Dimensions ..... 55

9 Warranty ..... 56

Wiring Diagrams..... 240

## 1. Instruction and Use

This manual contains warnings to signal dangers to the user or particular behaviour to comply with; these warnings are indicated as follows:

 WARNING!  Do not start the product before reading this instruction manual.

| | |
|---|---|
| Obligation to read instructions<br>The presence of this symbol mandates reading of instructions before putting the unit into operation. |  |
| Obligation to disconnect<br>The presence of this symbol mandates immediate disconnection of the unit from the mains in case of failures. |  |
| Obligation to wear gloves<br>The presence of this symbol mandates each operator wear suitable protective gloves. |  |
| Obligation to wear shoes<br>The presence of this symbol mandates each operator wear shoes designed to decrease the risk of injury. |  |
| General hazard<br>The presence of this symbol mandates special attention by the operator. |  |
| Shock Hazard<br>The presence of this symbol tells personnel involved that the described operation may present a risk of electric shock. |  |
| High intensity light hazard<br>The presence of this symbol indicates that you must take special care with the high intensity bright lights, risk to eyesight. |  |

WARNING! This manual must be kept for future reference. We recommend that users:

- Store this manual in an accessible location protected from moisture and heat and protected from the direct rays of the sun.
- Use the manual in such a way as to avoid damaging it or any part of its content.
- Do not remove, alter or tear on any part of the manual.

Despite the care and thoroughness with which this manual has been prepared, Indel Webasto Marine Srl cannot guarantee that the information within covers every possible event associated with installation of the product. Contact our technicians immediately in the event of uncertainty. In the event of selling or transferring the unit to another person, this manual and related documents should be delivered intact to the new user.

### 1.2 Environment

This product complies with the Directive 2002/96/EC regarding waste electrical and electronic equipment (WEEE).

The product's proper disposal is essential to preventing negative consequences for the environment and human health.

The symbol  on the product, the packaging and/or the accompanying documentation indicates that the product should not be disposed of as household waste. The product must be taken to an authorized collection centre for the recycling of electrical and electronic equipment. The product must be disposed of in compliance with the current local environmental regulations regarding waste disposal.

For more information regarding the disposal, recycling and reuse of the product, please contact your local authorities, your local waste collection service or the retailer/distributor from whom the product was purchased.

Packaging is manufactured from recyclable material. It bears the recycling symbol and  must be delivered to a collection centre.

The symbol CE indicates that the product complies with all European Union provisions provided for its use.

 WARNING! This unit contains fluorinated greenhouse gas R134a within a hermetically sealed system whose operation depends on the presence of said gas.

 WARNING! Never open the refrigerant circuit except for the normal connection/disconnection of couplings (where present). The R134a refrigerant contained within the unit is non-flammable in normal conditions. Never dispose of the refrigerant R134a in the environment.

Contact a qualified certified technician for handling fluorinated gases in the event of damage to the refrigerant circuit.

### 1.3 Safety Standards

 WARNING! Indel Webasto Marine Srl disclaims all liability for any malfunction or damage to persons or property due to improper use of the machine or with materials with different characteristics than those described in this manual.

Improper use or use of the product not in line with the information contained in this manual cannot result in claims against the manufacturer and/or supplier.

 WARNING! The refrigerator is only suitable for the preservation and/or storage of food items. The food items must be stored in their original packing or else in suitable containers. Do not consume expired food products as such behaviour could result in food poisoning.

WARNING! If medicines are to be stored in the refrigerator, check that the unit has a cooling capacity that will meet the requirements of the respective medicines.

WARNING! The only purpose and function of the product when used as a freezer is to maintain already frozen food completely frozen.

The refrigerator will not freeze non-frozen or partially frozen food products. If a non-frozen or partially frozen food product is stored in the freezer, this is considered improper use and can cause possible unintended thawing of food which may lead to problems related to safety, illness or injury if swallowed.

The preservation of non-frozen or partially frozen food in the freezer can also affect the quality of other frozen food products stored in the freezer.

Exposure to temperatures above the temperature of the climatic class range for which the freezer was built, power supply interruptions and/or frequent opening of the freezer can influence the effectiveness of the refrigerator and the quality of the contents of the freezer.

The user should always check food quality before ingesting.

WARNING! For extended periods of disuse or when defrosting, remove the unit's light bulb or  disconnect all of its power supplies. Leave the refrigerator door slightly open to air out the inside of the product and prevent the formation of mould.

WARNING! Eliminate all sources of heat and sparks within the unit's vicinity; in the event of coolant leakage, remove the unit's power plug and ventilate the room thoroughly.

 WARNING!  Disconnect the unit from the mains power supply immediately in the event of any malfunction. Never touch any damaged or non-insulated electrical cables while the electrical power supply is enabled. This observation is particularly true when the unit is connected to 115V or 230V mains voltage.

If the power cable is damaged, it must be replaced. Contact qualified personnel or the Service Centre.

 WARNING! Do not store inside the unit or in the vicinity of its electrical parts: flammable substance-based spray cans, explosive materials, electrical equipment, live animals.

Spray cans containing flammable substances may have leakage of these gases which, in contact with electrical parts, can ignite or cause explosions.

Keep any drinks with high alcohol content tightly closed and upright.

Avoid flames or sparks inside the unit.

Do not use electrical equipment inside the refrigerator.

 WARNING! The unit can be used by children under 8 years of age and by people with reduced physical, sensory or mental capabilities, or lack of experience or knowledge, provided they are supervised or after they have received instructions on safe use of and understanding of the dangers inherent in it.

Children should not play with the unit. Cleaning and maintenance meant to be performed by the user and must not be performed by unsupervised children.

 WARNING! Do not use plugs and switches if you have wet hands or feet.

## 2. Usage instructions

The climate class is indicated on the data plate inside the unit itself.

**SN** or **extended temperate class** (ambient temperature from 10°C to 32°C)

**N** or **temperate class** (ambient temperature from 16°C to 32°C)

**ST** or **subtropical class** (ambient temperature from 16°C to 38°C)

**T** or **tropical class** (ambient temperature from 16°C to 43°C)

### 2.1 Temperature adjustment

This product is equipped with a digital panel that has the following functions:

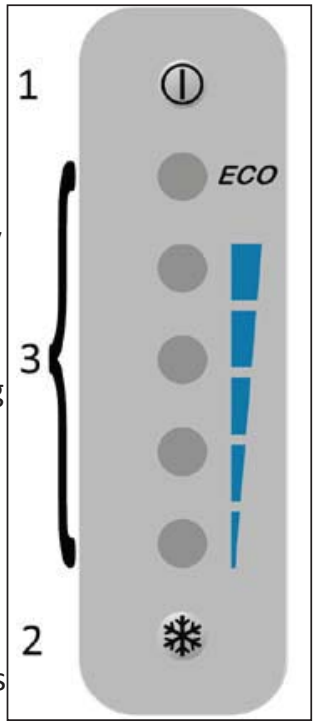


- Switching on: Press button 1 for at least 1 sec.
- Shut-down (Stand-By): press button 1 for at least 1 sec.
- Temperature setting display / Temperature level selection / ECO mode selection: use button 2
- The 3 LEDs have the task of lighting the inside of the refrigerator, indicating the set temperature level, indicating the selected temperature level, indicating ECO mode selection, and indicating any errors.

**Main Power Supply:** the system accepts a power supply including a 12Vdc system: 9.6 and 17.0Vdc, 24Vdc system: 21.3 and 31.5Vdc.

**Internal Lighting:** when the refrigerator is on, internal lighting is assured by high intensity lighting of the 5 LEDs on the internal display. An electronic sensor (Reed) detects door opening and closing and activates the switching on and off of LEDs.

**Temperature Display and Selection:** the refrigerator must be on in order to view the set temperature level.

Press the  button once and the system will exit from lighting mode and enter into set temperature level indication mode. It is possible to select a temperature between 1°C [34°] and 9°C [48°F] divided into four levels.

To select another level, press the button  consecutively to select the temperature levels in sequence as follows:

| | |
|---|---|
|  **LEVEL 1** indicates the hottest temperature level |  **LEVEL 2** indicates the medium to high internal temperature level |
|  **LEVEL 3** indicates the medium to low internal temperature level | 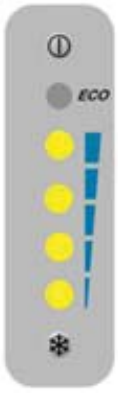 **LEVEL 4** indicates the coldest temperature level |

Wait 3 seconds to store the desired temperature after having selected it. The system will exit from temperature selection setting and will enter into internal lighting mode.

**ECO function:**




The ECO function can be selected to accumulate refrigerant energy during the battery charging phase with the motor turned on or with the battery charger active. The function is activated with voltage exceeding 13.5Vdc or 25.5Vdc for a time greater than 60 seconds, the average indoor temperature can go down to 1°C.

All cooling energy accumulated inside food and drink is released when voltage goes below 12.5Vdc or 24.5Vdc.

The ECO function is enabled by pressing the  button for more than 3 seconds. When the ECO function is active, the compressor rotates at full speed to accumulate as much as energy as possible in the food and drinks in as little as time possible. When the ECO function is active, the internal temperature level selection function is disabled.

The ECO function is suspended when the power voltage on the control unit goes below 12.5Vdc or 24.5Vdc for a period exceeding 60 seconds, mainly when the motor switches off or battery charging is switched off/deactivated. The internal temperature will re-align to the last temperature level set, the compressor will rotate at full speed.

To deactivate the ECO function, press the  button. If the refrigerator is switched off or power is cut off, the ECO function will stay stored if active.

## 2.2 Usage recommendations

- If possible, the refrigerator should be turned on for about 6 hours prior to inserting the food items.
- Frequent opening of the refrigerator door will result in greater power consumption.
- Ensuring adequate ventilation for the compressor and the condensing unit will significantly reduce power consumption.
- Never obstruct the refrigerator's ventilation system.
- The electrical system must be kept in good condition. Inspect the batteries and check the charge levels regularly. Always use a starter battery separate from the motor.
- Keep the inside of the refrigerator clean and dry. Remove the condensation water from the drip tray beneath the refrigerator's freezer compartment where present.
- To keep the surface of the door in good conditions and intact, make sure that it is always clean and dry.
- The unit has been designed with a product lock protection in the event of low battery voltage. In the event of a compressor block, follow the instructions in this manual and/or contact specialised technicians or Indel Webasto Marine Srl service centres.
- The compressor can operate up to an angle of 30°, while greater angles can cause permanent damage to the compressor.

## 2.3 Defrosting

Since the evaporator operates at temperatures well below freezing, ice and frost will inevitably form upon it.

The humidity in the air, the temperature and the number of times the door is opened will have a significant impact on frost formation.

The refrigerator should always be defrosted when the layer of frost on the evaporator reaches a thickness of 3-4 mm or more.

Switch off the refrigerator.

Defrosting should be performed when the products can remain as cool as possible outside of the refrigerator itself. Do not use sharp objects to remove ice and frost from the evaporator, as this could damage it and result in leaks.

Only turn the refrigerator back on once it has been defrosted, cleaned and thoroughly dried. Remove, empty and dry the drip tray beneath the evaporator. A towel can be placed at the base of the refrigerator during the defrosting procedure in order to facilitate water collection.

## 3. Maintenance

Isotherm Cruise & Cruise Elegance refrigerators are equipped with closed cooling systems, which do not require maintenance or refrigerant refills.

The compressor is specifically designed for mobile applications and guarantees maximum performance and durability. In the winter, the refrigerator must be stored inside the vehicle, but the compressor will not work at temperatures near or below 0°C. Seasonal maintenance is limited to the cleaning of the condensing unit behind the refrigerator. In particular, it is necessary to brush/vacuum out all the dust that has accumulated due to the fan. This can be done using a soft brush and a vacuum cleaner. It is important to keep the inside of the refrigerator clean by washing it with warm water and mild soap and by drying any water/condensation that may be encountered.

To keep the surface of the door in good conditions and intact, make sure that it is always dry and clean.

In order to prevent damage to the electrical/mechanical components and/or the formation of mould, when shutting off the refrigerator for extended periods of time it is necessary to wait for the unit to defrost completely and to eliminate any

condensation that may have formed, both inside the unit and in the external water collection tray. The natural defrosting time can vary from a few minutes to several hours. In the wintertime and when the refrigerator is shut off, the door should be left slightly ajar for ventilation and **all power disconnected**.

Free Line Elegance refrigerators are equipped with a special door stopper system to set the door in the ventilation position inserted in the top.

To set the door in ventilation position, push the door stopper toward the right to the ventilation position (--> TO VENT) as indicated in Fig. 4.

### 3.1 Low voltage protection

In order to prevent excessive battery depletion, a protection device shuts off the compressor in case of insufficient voltage and turns it back on when the voltage in the system increases after the batteries have been charged.

| System Voltage | Shut-down Voltage | Minimum Operating Voltage |
|---|---|---|
| 12V | 9.6 (10.4) V | 10.9 (11.7) V |
| 24V | 21.3 (22.8) V | 22.7 (24.2) V |

If the bridge is removed between C and P, the values indicated in the parentheses are valid.

**WARNINGS: Before switching on the unit, always make sure that the batteries are in optimal condition.**

## 4 Installation Warnings

 WARNING! In order to guarantee the unit's safe functionality, follow the indications included with in these instructions when installing and connecting the unit.

 WARNING! Always use PPE  (Personal Protective Equipment) during product handling and installation.

 WARNING! Any changes made to the product without the knowledge of the manufacturer will be the sole responsibility of those carrying out said changes. Changes made without the permission of Indel Webasto Marine Srl will void all warranties and may void the declaration of conformity to applicable directives.

 WARNING! Check for any visible damage on the refrigerator's mechanical and electrical components prior to use.

 WARNING! Do not damage refrigerant circuit pipes. Coolant sprays can damage eyesight.

 WARNING! In the event of damage to the unit itself, notify the supplier immediately before performing the connections.

 WARNING! If the power cable is damaged, it must be replaced by the manufacturer, an authorized Service Centre or a qualified technician.

 WARNING! Install the refrigerator in a dry place that's sheltered against water spray. The unit's electrical components must NOT be exposed to rainfall and/or sprays of water.

 WARNING! Install the refrigerator away from gas or LPG cylinders.

 WARNING! The product must be installed in an area accessible for any maintenance. The housing space of live parts and of the condensing unit/compressor must only be opened voluntarily and not directly accessible.

 WARNING! The compressor/condensation unit installation area must be made with a material resistant to the needle-flame test required by standard EN 603335---1 or else be more than 5 cm from electrical and/or electronic components.

 WARNING! If there is a battery charger, it must be connected to the battery and never directly to the refrigerator.

 WARNING! The appliance must be protected against indirect contact in accordance with the "Heavy Current Regulations".

 WARNING! In case of power connection from AC mains, to avoid the risk of serious personal injury, ensure that it is equipped with cut-off devices (switches) which permit total disconnection of the unit current and protective devices which automatically intervene in the event of malfunction.

 WARNING! Never touch any damaged or non-insulated electrical cables while the electrical power supply is enabled. This observation is particularly true when the unit is connected to 115Volt or 230Volt mains voltage.

## 4.1 Installation

Isotherm refrigerators have been designed and constructed exclusively for recessed installation and installation that is in compliance with standard dimensions. The refrigerator must always be in a horizontal position, with the compressor's rubber feet at the bottom. The compressor is capable of functioning at angles of up to 30°. The compressor can become damaged with any higher inclinations.

Also remote operation compressors must be installed with its rubber feet downward.

Elegance models can be fixed to the lodgings by means of the Easy Fix system. This system involves four special pre-drilled points inside a trunk, for easy and effective installation that is not visible from the outside (Fig. 8).

With Easy Fix, you can install units with the door flush to the furniture without using a special mounting flange. For this installation, you must leave 10 mm of space between the refrigerator and the furniture unit at least for the entire thickness of the door, thus ensuring its free movement (Fig. 6).

Always secure the refrigerator in such a way so that it will not tip/slide forward when the drawer is opened or in the case of sudden vehicle movement. The unit should be anchored by at least 2 fastening points, in accordance with the provisions of the EN 60335-2-24 standard.

### 4.2 Ventilation

It is extremely important for the compressor/condensing unit located behind the refrigerator to be well ventilated so that the fresh air can enter at the bottom and pass behind the refrigerator, with the hot air being allowed to escape from the top or sides (Fig. 1). The illustrations (Fig. 2-3) show an example of how the refrigerator housing should be set.

### 4.3 Door Panelling

To change door panelling on Free Line Elegance models, delicately remove the 4 lateral panel locking strips, remove the small handle frame and then it will be possible to remove the panel. Insert the new panel and delicately reinstall the lateral strips and the handle frame (Fig. 7).

This procedure is illustrated on our “Indel Webasto Marine” channel.

### 4.4 Door Reversibility

The opening direction of Isotherm Free Line Elegance refrigerator doors can be reversed to meet installation requirements.

To reverse the opening direction of the door, remove the screws securing the top and the fastening pins, remove the door, reverse the fastening hinges as illustrated (Fig. 5) and re-insert the door and re-tighten all parts.

## 4.5 Electrical Connections

- In order connect the unit to the vehicle's electrical system, proceed as follows:
- Before turning on the appliance, check to make sure that the voltage of the electrical system and/or battery complies with that which is indicated on the unit’s data plate.
- Connect the refrigerator directly to the battery or to the relative main switch and make sure that the system is equipped with an electric device that’s capable of protecting the circuit against possible overcurrents.

If the power supply voltage is different from 12/24Vdc, install a ΔI 0.03A differential circuit breaker. Avoid connecting the unit via the vehicle's control panel as this could result in voltage drops.

- Insert a fuse upstream from the refrigerator (see the table below). Connect the red wire to the electrical system’s positive terminal, and connect the black wire the negative terminal. Use a pressed lug terminal that’s suitable for the cable’s size.
- A separate switch that simultaneously disconnects the power cables must be installed upstream from the refrigerator. Check to make sure that the installed switch supports the corresponding load indicated in the table below.

| Model | 12Vdc | 24Vdc |
|---|---|---|
| Free Line 115 Elegance | 15A | 7.5A |



WARNING! If there is a battery charger, it must be connected to the battery and never directly to the refrigerator.

All wiring diagrams can be found at the end of the manual.

### 4.6 Size of the electrical cables

Always use cables of a suitable cross-section. The minimum cross-sections are listed in the table below:

| Cross-section in mm² | AWG section | Max 12 V cable length m/ft | Max 24V cable length m/ft |
|---|---|---|---|
| 2.5 | 13 | 2.5/8 | 5/16 |
| 4 | 11 | 4/13 | 8/26 |
| 6 | 9 | 6/19 | 12/39 |
| 10 | 7 | 10/33 | 20/66 |

## 5 Technical data (standard configurations)

Operating voltage: 12 or 24 VDC

Average consumption measured with internal temperature +5°C and outside temperature 25°C. Average consumption is influenced considerably by the way the refrigerator is used and the type of ventilation.

Refrigerant: R134a (the system's capacity is indicated on the refrigerator's data plate).

The refrigerators meet the requirements of the EMC directive and bear the CE marking.

| **Model** | **Max. instantaneous consumption 12/24Vdc (Amperes)** | **Max. instantaneous consumption 12/24Vdc (Watt)** | **Average consumption at 25°C (Watt/24h)** |
|---|---|---|---|
| Free line 115 Elegance (Static) | 6.0/3.0 | 72 | 363 |
| Free line 115 Elegance (Ventilated) | 6.0/3.0 | 72 | 257 |

## 6 Troubleshooting

All work on electrical parts or electrical connections and the refrigerant circuit must be carried out by qualified and authorised personnel.

Warning: Disconnect electrical power before performing any operations on electrical parts or on electrical connections.

| Defect | Possible cause | Intervention |
|---|---|---|
| The refrigerator does not cool, the compressor will not start. | No electrical power. Battery in poor conditions. Faulty thermostat. Defective electronic control unit. | Check to make sure that the electronic control unit is receiving sufficient power and voltage; check the fuse. Verify that the internal lighting is working and that the compressor is receiving power. Check the cables, lugs and connectors. Verify that the battery is charging properly. Check the thermostat: Bridge T - C with a separate cable. If the compressor will not start, its electronics are probably defective. Replace. If the compressor starts up with the bridge, the thermostat is defective. Replace the thermostat. |
| The compressor only performs brief attempts at starting up. | There is insufficient voltage or else a drop in voltage during the attempt to start. The protection device is activated. The Batteries are drained. | Check the cables and connections; remove any traces of oxidation or corrosion. Charge the batteries, start the motor or connect the battery charger. |
| The compressor functions but doesn't cool. | Loss of refrigerant through the evaporator or the tubing. Tubing clogged. | Carry out a leak check and repair any leaks, drain and refill the proper amount of R134a refrigerant. (This operation must be carried out by a qualified technician.) |
| The compressor runs for a long time but doesn't cool properly (reduced efficiency). | Insufficient ventilation, the condensation unit is overheating. The fan is not working properly. There is too much frost on the evaporator. The door does not close properly and lets in warm, moist air. The condenser is blocked by dust. | Increase the ventilation. Replace the fan. Defrost the unit. Correct the position of the door and check the gasket. Clean the condensing unit. |

| | | |
|---|---|---|
| The fuse blows. | The wrong fuse is being used. Defective electronic control unit. | Check the fuse: see table in section 4.4. Replace the electronic control unit. |
| The compressor is operating intermittently. | Battery low or electrical cables in poor conditions. | Check wiring conditions, examining for loose connections, rust or verdigris. If wiring needs to be replaced, see the manual for correct sizing. If wiring is in good conditions, check battery function and replace if in poor condition. |
| The compressor never stops (correct fridge performance) | Incorrect thermostat connection on the electronic control unit. Thermostat broken. Condensation is not working properly, evaporator cools but not enough to cause the thermostat to stop the compressor. | Rotate the thermostat to off position. If the refrigerator continues to function, then there is continuity on the control unit. Correct the problem on thermostat connections (make sure the bridge is present on C and P and not on C and T on the electronic control unit). Rotate the thermostat to off position. If the compressor switches off but it is impossible to regulate temperature, replace the thermostat or recharge the cooling system. |
| The compressor never stops (poor fridge performance) | Environment very hot + insufficient ventilation or little gas in the refrigerant circuit. | Check ventilation. The compressor must be installed in a well-ventilated location. If possible, remove the refrigerator from the installation hole. If the refrigerator operates better, improve ventilation, consulting the manual for correct installation. If ventilation is instead optimal, check for the presence of gas in the system, contacting a specialised technician. |
| The freezer compartment is cold but the refrigerator is not | Insufficient ventilation, little gas in the refrigerant circuit, electrical power not continuous. | Check ventilation. The compressor must be installed in a well-ventilated location. If possible, remove the refrigerator from the installation hole. If the refrigerator operates better, improve ventilation, consulting the manual for correct installation. Check electrical connection and battery conditions. If ventilation is instead optimal, check for the presence of gas in the system, contacting a specialised technician. |

| | | |
|---|---|---|
| Excess ice on the evaporator. | Moisture infiltrations in the refrigerator. | Check the conditions of the gasket on all four sides of the door. The gasket must close perfectly on the unit. If the formation of ice is thicker on one side, most likely there is moisture infiltration in the refrigerator is coming from that side. Use a moderate heat source to model the gasket into position. If the gasket cannot be modelled, replace the entire door. |
| The refrigerator cools too much. | The thermostat sensor is too covered or incorrectly positioned | The end of the sensor must be in contact with the evaporator. Set the sensor in the correct position. If the refrigerator continues to cool too much, replace the thermostat. |
| The compressor is noisier than normal. | The compressor is not properly secured on its support or it is touching the wall. | Check that compressor screws are properly tightened and that nothing is in contact with it. The compressor vibrates and, if something is in contact with it, vibrations increase. |
| The fan/s is/are noisier than normal. | The fan structure is bent or the fan is broken. | Remove the clamps/screws used to secure the fan. Replace if the fan continues to make noise. Make sure that all of the fan is intact. Replace if one or more fins is missing. |
| The internal light does not switch on. | Polarity reversed or broken bulb. | Check bulb polarity. Replace light bulb if polarity is correct. |
| Door/Drawer not closing properly. | Incorrect position of hinges or deformed gasket. | Re-position hinges so that the door closes correctly. Use a moderate heat source to remodel the gasket. Replace door if problem persists. In the case of drawer refrigerators, use the adjustable guides to align the door. |

For more complicated defects requiring specialised assistance, please contact Indel Webasto Marine S.r.l. Italia or your nearest Isotherm retailer.

## 7 Display Diagnostics

The display is equipped with a self-diagnostic system. Errors will be shown on the display as follows if any malfunctions occur:

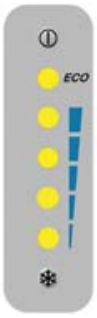


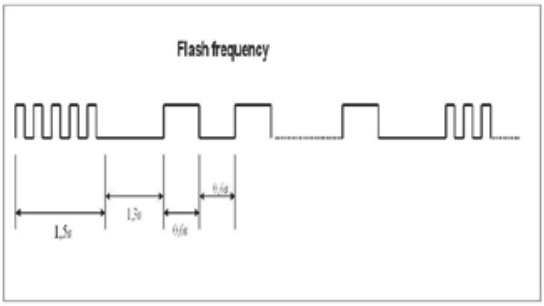


- 5 quick flashes in sequence (1.5 sec) to signal that the refrigerator is in error conditions
- # slow flashes (see table below) to signal the type of error

The error signal sequence will repeat until the system is reset.

All 5 LED lights will flash during error reporting.

| Error | Error Identification | Solution |
|---|---|---|
| 1 | Battery protection (voltage is outside the maximum and minimum voltages) | Check voltage on the control unit.<br>Check power cable conditions.<br>Replace with new cables if necessary.<br>Check battery conditions. |
| 2 | Fan short-circuited (the fan absorbs more than 1A from the electronic control unit) | Replace the fan. |
| 3 | Motor starting error [the rotor is blocked or pressure inside the refrigerant circuit is too high (> 5 bar)]<br>Defective electronic control unit | Replace the electronic control unit or replace the compressor. |
| 4 | Minimum motor speed error (if the refrigeration system has been overloaded, the motor cannot maintain a speed of 1850 RPM). | Remove excess gas. |
| 5 | Thermal protection of the electronic control unit | Check compressor/condensing unit ventilation. |
| 6 | Defective sensor (the sensor is defective or disconnected). | Reconnect the sensor and verify operation or replace the sensor. |
| 7 | Communication error with display | Check connections, replace the compressor control unit and/or the display. |

## 8 Dimensions

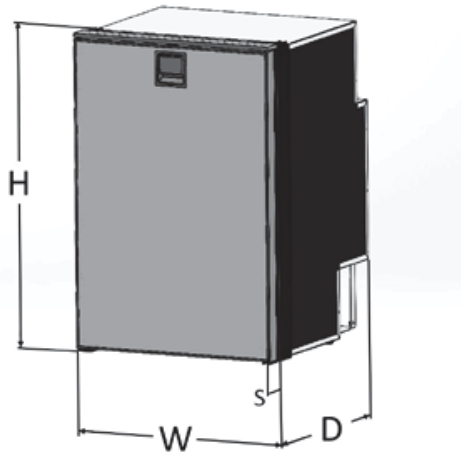


| Model | Width (mm) [W] | Height (mm) [H] | Depth (mm) [D] | Door Thickness (mm) [S] | Cut-Out Protruding door (mm) W:H | Cut-Out Furniture Flush Door (Flush) (mm) W:H |
|---|---|---|---|---|---|---|
| Free Line Elegance (Static) | 525 | 795* | 515 | 50 | 527:797 | 527**:802 |
| Free Line Elegance (Ventilated) | 525 | 795* | 490 | 50 | 527:797 | 527**:802 |

| |
|---|
| *Calculated height including foot and door hinge not including the TOP measuring 5mm. |
| **Please refer to chapter 4.1 (Fig.6) to obtain the necessary space for free opening of the door. |
| FOR AC/DC VERSIONS, KEEP IN MIND THAT, DUE TO LACK OF SPACE, DEPTHS EXCEEDING 50 mm WILL HAVE TO BE EVALUATED ON A CASE BY CASE BASIS. |
| AS PER REGULATIONS AND FOR PROPER OPERATION, THE WALLS OUTSIDE OF THE REGRIGERATOR SHOULD BE SET AT THE FOLLOWING DISTANCES FROM THE INTERNAL WALLS OF THE UNIT: 20mm ON WALLS WHERE THE COMPRESSOR IS NOT PRESENT AND 50MM ON THE WALLS WHERE THE COMPRESSOR IS PRESENT. IF THESE RULES CANNOT COMPLIED WITH, THE MINIMUM DISTANCE MEASUREMENTS MUST BE 5mm AND THE MATERIALS WITH WHICH THE WALLS ARE MADE MUST BE EXPLOSION PROOF. |

## 9 Warranty

The Indel Webasto Marine warranty complies with EU Directive 1999/44/EC.

**Validity period**
The warranty for Isotherm marine refrigerators and freezers is valid for 2 years with regard to the cost of labour for repair or replacement, but only if carried out by IWM network, and therefore authorised, service centres.
The validity period starts from:
a) The date of sale indicated on the product invoice or sales receipt
b) The date of the invoice or registration document of the first sale of the boat/vehicle in which it is installed, if installed by the manufacturer of the vehicle
c) In the absence of one of the above documents, the week of production indicated in the S/N (serial number)
Replacement of a product or component does not change the validity period.

**The warranty covers:**
- Replacement or repair of the product or of one or more components acknowledged to be faulty due to manufacturing defects.
- Breakage or malfunction of components under warranty validity despite proven proper installation and proper use.
- Labour and transport according to the operating methods described below.
- Costs for shipping the replacement product (not including charges for customs clearance).

**The warranty does not cover defects, damage or malfunctions caused by:**
- Negligence, neglect or improper use
- Incorrect installation or incautious handling
- Insufficient ventilation
- Incorrect electrical connection
- Undersized wiring
- Improper maintenance or maintenance performed by unauthorised personnel
- Failure to follow the instructions contained in this manual
- Transport damage
- Charges for customs clearance
- Items subject to wear, fuses etc.
- Professional use
- Damage caused by weathering

**Essential information for determining whether the case is covered by the warranty:**

- Product code (indicated on the product label)
- S/N (serial number) (indicated on the product label)
- Invoice or sales receipt (or possibly registration document, see above in Validity period section)
- Detailed description of the defect (Attach photos if possible)
- Description of installation with particular attention to ventilation and wiring (Attach photos if possible)

(If it is determined that the case is not covered under warranty, the customer must pay all expenses for repairs, replacements, labour, travel of persons and transport. IWM is not required to bear any expense.)

**Operating procedures to be applied once it is ascertained that the case is covered by warranty:**

Refrigerators installed on boats:
Warranty repairs must be performed exclusively by service centres (CAT) that are part of the Indel Webasto Marine network. IWM does not cover costs for service performed by others. Find the service centre nearest to you at www.indelwebasto-marine.com

For products installed on boats, an IWM authorised CAT technician will come to the boat if it is located at a distance of maximum 100km from the CAT. IWM shall cover the cost of this transfer. If the boat is over 100km away, the customer can choose whether to pay the cost of the technician's transfer (in this case paying the technician directly), or to move the boat closer.

IWM does not reimburse any expense for spare parts purchased elsewhere, not of the IWM network.

Refrigerators installed on Recreational vehicles (RV):
Warranty repairs must be performed exclusively by service centres that are part of the Webasto network.
The vehicle must be brought to the service centre.
Find the service centre nearest to you at www.webasto.com

Fig.1

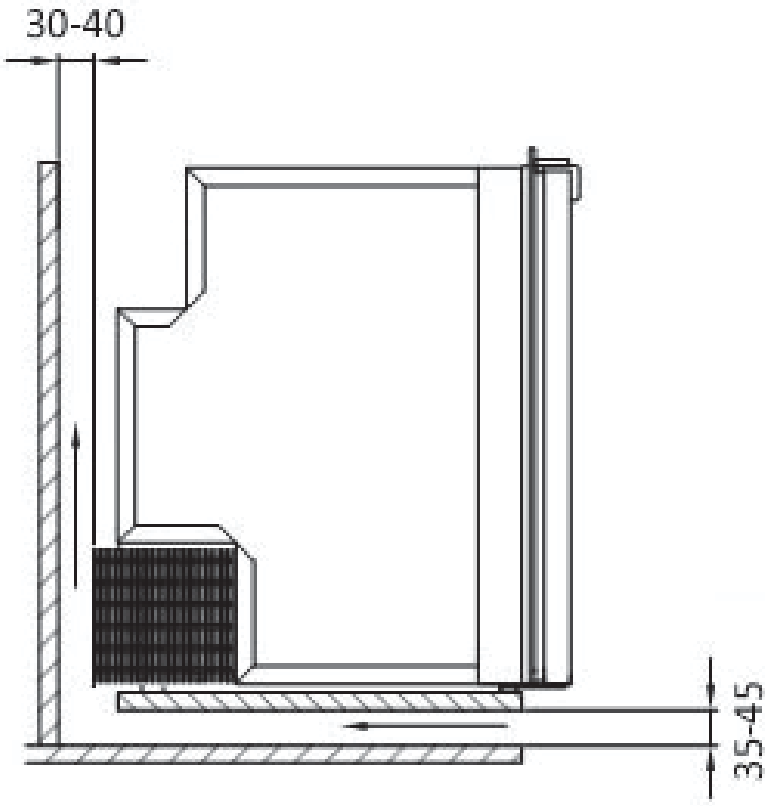


Fig.2

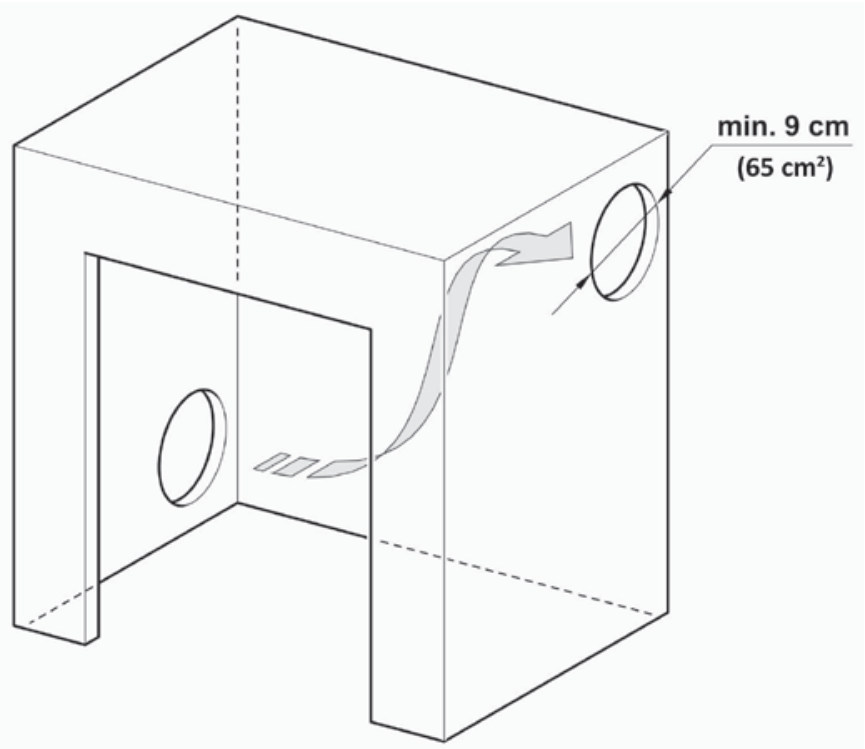

Fig.3

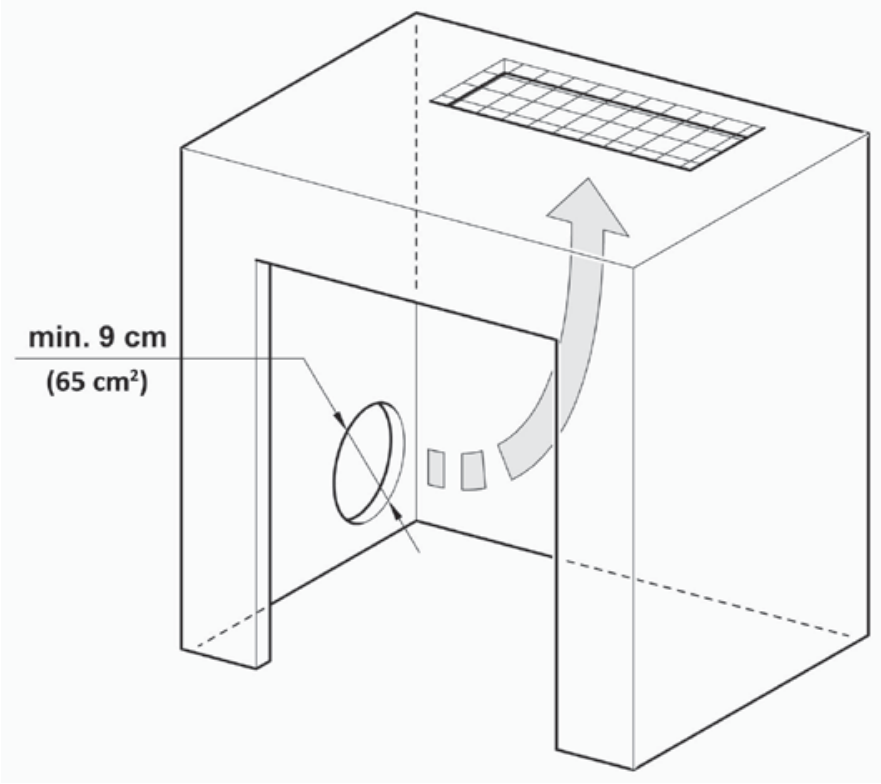


Fig.4

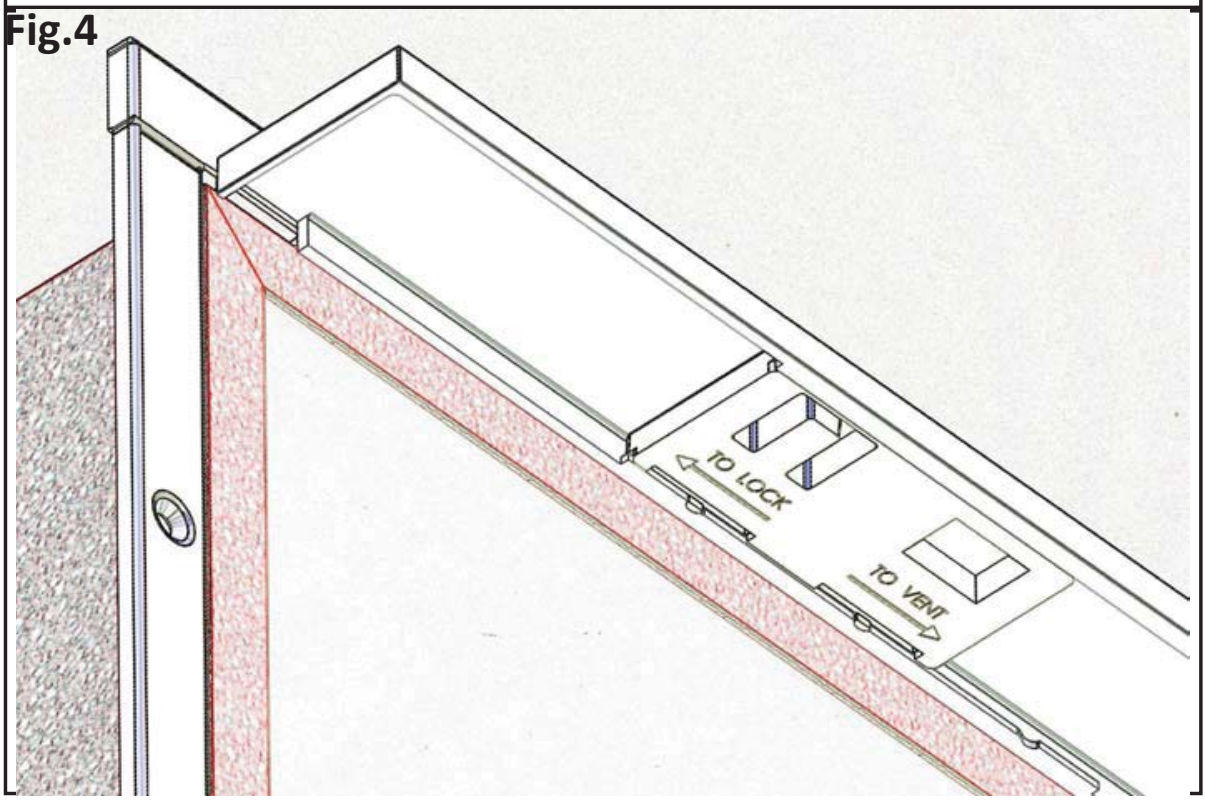

Fig.5

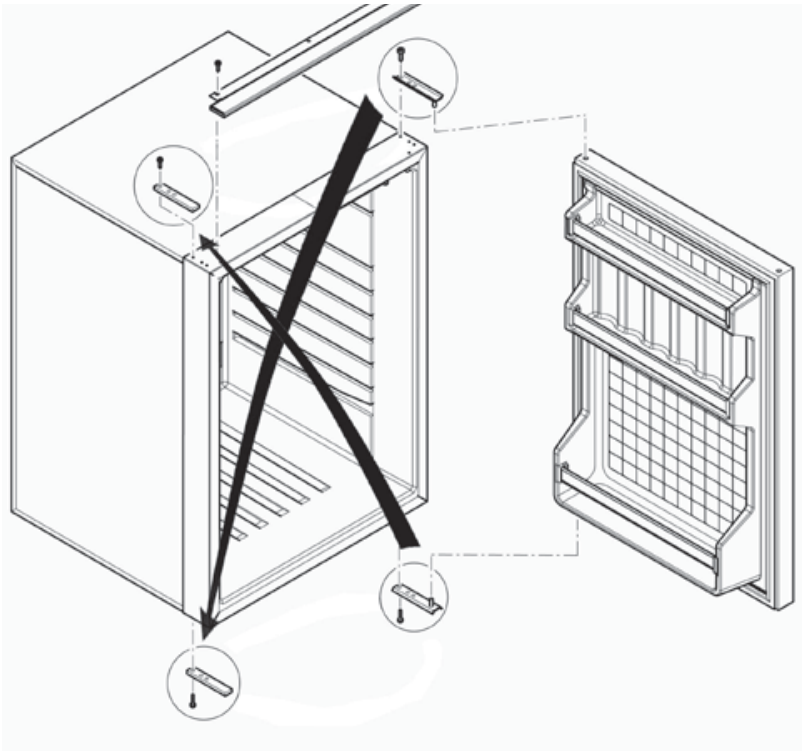

Fig.6

