User Guide

SIDE BY SIDE REFRIGERATOR

GB

English, 1

MSZ 900 DF (UK)
MSZ 902 DF (UK)
MSZ 906 DF (UK)

Contents

Before using the appliance, 2

Safeguarding the environment, 3

Precautions and general recommendations, 4

If the appliance is not going to be used, 5

Maintenance and cleaning, 6

Storing, freezing and thawing food, 7

A look inside, 8

Guide to the inside parts, 9

Using the appliance, 10

Using the ice and water dispenser, 13

Using the automatic ice-maker, 14

Changing a water filter cartridge, 15

Troubleshooting guide, 16

Assistance, 19

Hotpoint

Before using the appliance

GB

! Your new appliance is designed exclusively for domestic use.

! After unpacking the appliance, make sure it is not damaged and that the door closes properly. Any damage must be reported to the dealer within 24 hours of delivery of the appliance.

! Wait at least two hours before switching the appliance on, to ensure that the refrigerant circuit is fully efficient.

! Installation and the electrical connection must be carried out by a qualified technician, according to the manufacturer's instructions and local safety regulations.

! Clean the inside of the appliance before using it.

Safeguarding the environment

Hotpoint

GB

Packing

The packing material is 100% recyclable and bears the recycling symbol. For disposal, comply with local regulations. Keep the packing materials (plastic bags, polystyrene parts, etc.) out of reach of children, as they are a potential source of danger.

Scrapping/Disposal

The appliance is manufactured using recyclable materials.
This appliance is marked in compliance with European Directive 2002/96/EC on Waste Electrical and Electronic Equipment (WEEE). By ensuring the correct disposal of this appliance, you can help prevent potentially negative consequences for the environment and the health of persons.

The  symbol on the appliance, or on the accompanying documents, indicates that this appliance should not be treated as domestic waste but must be taken to a special collection centre for the recycling of electrical and electronic equipment.
When scrapping the appliance, make it unusable by cutting off the power cable and removing the doors and shelves so that children cannot easily climb inside and become trapped.
Scrap the appliance in compliance with local regulations on waste disposal, taking it to a special collection centre; do not leave the appliance unattended even for a few days, since it is a potential source of danger for children.
For further information on the treatment, recovery and recycling of this product, contact your competent local office, the household waste collection service or the shop where you purchased the appliance.

Information:
This appliance does not contain CFCs (the refrigerant circuit contains R134a) or HFCs (the refrigerant circuit contains R600a) (see the rating plate inside the appliance).
Appliances with Isobutane (R600a): isobutane is a natural gas without environmental impact, but is flammable. Therefore, make sure the refrigerant circuit pipes are not damaged.

Declaration of conformity

- This appliance has been designed for preserving food and is manufactured in compliance with Regulation (CE) No. 1935/2004.

  CE
- This appliance has been designed, manufactured and marketed in compliance with:
  - the safety objectives of Low Voltage Directive 2006/95/CE;
  - the protection requirements of Directive “EMC” 89/336/EEC amended by Directive 93/68/EEC.

Electrical safety of the appliance can only be guaranteed if it is correctly connected to an approved earthing system.

Precautions and general recommendations

GB

Installation

- The appliance must be handled and installed by two or more persons.
- Be careful not to damage the floors (e.g. parquet) when moving the appliance.
- During installation, make sure the appliance does not damage the power cable.
- Make sure the appliance is not near a heat source.
- To guarantee adequate ventilation, leave a space on both sides and above the appliance and follow the installation instructions.
- Keep the appliance ventilation openings free.
- Do not damage the appliance refrigerant circuit pipes.
- Install and level the appliance on a floor strong enough to take its weight and in a place suitable for its size and use.
- Install the appliance in a dry and well-ventilated place. The appliance is arranged for operation in places where the temperature comes within the following ranges, according to the climatic class given on the rating plate.
  The appliance may not work properly if it is left for a long time at a temperature outside the specified range.

Climatic Class	Amb. T. (°C)	Amb. T. (°F)
SN	From 10 to 32	From 50 to 90
N	From 16 to 32	From 61 to 90
ST	From 16 to 38	From 61 to 100
T	From 16 to 43	From 61 to 110

- Make sure the voltage specified on the rating plate corresponds to that of your home.
- Do not use single/multi adapters or extension cords.
- For the water connection, use the pipe supplied with the new appliance; do not reuse that of the previous appliance.
- Power cable modification or replacement must only be carried out by qualified personnel.
- It must be possible to disconnect the appliance from the power supply by unplugging it or by means of a mains two-pole switch installed upstream of the socket.

Safety

- Do not store or use petrol, flammable liquids or gas in the vicinity of this or other electrical appliances. The fumes can cause fires or explosions.
- Do not use mechanical, electric or chemical means other than those recommended by the Manufacturer to speed up the defrost process.
- Do not use or place electrical devices inside the appliance compartments if they are not of the type expressly authorised by the Manufacturer.
- This appliance is not designed for use by young children or the infirm without supervision.
- To avoid the risk of children becoming trapped and suffocating, do not allow them to play or hide inside the appliance.
- Do not swallow the contents (non-toxic) of the ice packs (in some models).
- Do not eat ice cubes or ice lollies immediately after taking them out of the freezer since they may cause cold burns.

Use

- Before carrying out any maintenance or cleaning operation, unplug the appliance or disconnect it from the power supply.
- All appliances equipped with an automatic ice-maker and water dispenser must be connected to a water supply that only delivers drinking water (with mains water pressure of between 0.17 and 0.81 Mpa (1.7 and 8.1 bar)). Automatic ice-makers and/or water dispensers not directly connected to the water supply must be filled with drinking water only.
- Use the refrigerator compartment only for storing fresh food and the freezer compartment only for storing frozen food, freezing fresh food and making ice cubes.
- Do not store glass containers with liquids in the freezer since they may burst.

The Manufacturer declines any liability if the above advice and precautions are not respected.

If the appliance is not going to be used

Hotpoint

GB

In case of power failures of up to 24 hours

Keep the doors of the appliance closed. In this way the stored food will stay cold as long as possible.

If the appliance is not going to be used

- **Disconnect the appliance from the power supply.**
- Remove all food if you are going away for more than three weeks.
- If the appliance has an automatic ice-maker:
  1. Shut off the water supply to the automatic ice-maker.
  2. Empty the ice bucket.
- Leave the doors open enough for air to circulate inside the compartments. This will prevent the formation of mould and bad odours.

Maintenance and cleaning

GB

- Before any cleaning or maintenance operation, always disconnect the appliance from the power supply.
- Periodically clean the appliance with a cloth and a solution of lukewarm water and neutral detergent specific for refrigerator interiors.
- Never use detergents or abrasives. Never clean the refrigerator parts with flammable liquids. The fumes can cause fires or explosions.
- Clean the outside of the appliance and the door seals with a damp cloth and dry with a soft cloth.
- Do not use steam cleaners.
- Clean the condenser using a vacuum cleaner, remove the front kickplate (see installation handbook).
- The buttons and control panel display (located on the freezer door on some models) must be cleaned with a dry cloth; do not use alcohol or alcohol-derived substances.
- The refrigerant system pipes are located near the defrost pan and can become very hot. Periodically clean them with a vacuum cleaner.

Replacing light bulbs

Attention

- Always disconnect the refrigerator from the power supply before replacing any light bulbs.
- Before replacing the light bulb, remove the light guard that may be present. This will have to be put back after replacing the light bulb.



- The refrigerator accepts light bulbs with a bayonet type mount. These do not need unscrewing/screwing when replacing.



- The ice/water dispenser light bulb has a standard screw type mount and therefore needs to be screwed in place.

Replace the lamp with one of the same type, available from the After-sales Service or from authorised dealers.

Storing, freezing and thawing food

Hotpoint

GB

Introduction

Wrap food so that no water, moisture or condensate can enter; this will prevent odours or aromas going from one part to another in the refrigerator, ensuring better preservation of frozen foods. Use plastic containers with hermetic lids, aluminium trays, aluminium foil, plastic film and waterproof plastic wraps.
NOTE: Never place hot food in the freezer. Allow hot foods to cool to room temperature for 30 minutes, then wrap and freeze. Cooling hot foods before freezing saves energy and prolongs the life of the appliance.

Sealing

When sealing food in bags, remove the air (liquids need space to expand). Fasten the top of the bag with a string. Put the label inside transparent bags; use self-adhesive labels for applying on the outside of opaque bags.

Defrosting

Useful suggestions.
- **Raw vegetables:** place directly in boiling water without thawing and cook normally.
- **Meat (large cuts):** thaw in the refrigerator compartment without removing the wrapping. Before cooking, leave at room temperature for a couple of hours.
- **Meat (small cuts):** thaw at room temperature or cook directly.
- **Fish:** thaw in the refrigerator compartment without unwrapping or cook directly before completely thawed. In case of a power failure, the freezer compartment will maintain an adequate storage temperature for about 12 hours; during this period, it is advisable to keep the compartment door closed. Do not refreeze partially thawed food.
- **Already cooked food:** heat in the oven without removing it from the aluminium containers.
- **Fruit:** thaw in the refrigerator compartment.

FOOD STORAGE CHART

Storage times vary according to the quality of the food, the type of packaging or wrap used (which should be moisture and steam proof), and the storage temperature (which must be -18°C).

Food category	Months
FRUIT	
Concentrated fruit juice	12
Fruit (in general)	8-12
Citrus fruit and fresh fruit juices	4-6
VEGETABLES	
Commercially frozen	8
Home frozen	8-12
STEWS	
Meat, poultry and fish	2-3
FISH	
Cod, sole	6
Salmon	2-3
Mackerel, perch	2-3
Already seasoned fish	3
Clams, oysters	3-4
Boiled fish, crabs	3-4
Raw crayfish	12

Food category	Months
MEAT	
Sausages	4 weeks or less
Hamburgers	1
Beef, veal, lamb	2-3
ROASTS	
Beef	6-12
Lamb and veal	6-12
Pork	4-6
Fresh sausages	1-2
STEAKS AND CHOPS	
Beef	8-12
Lamb, veal, pork	2-4
POULTRY	
Chicken or turkey (whole or parts)	12
Duck and goose	6
Cooked poultry (in sauce)	6
Steak (without sauce)	1

A look inside

GB

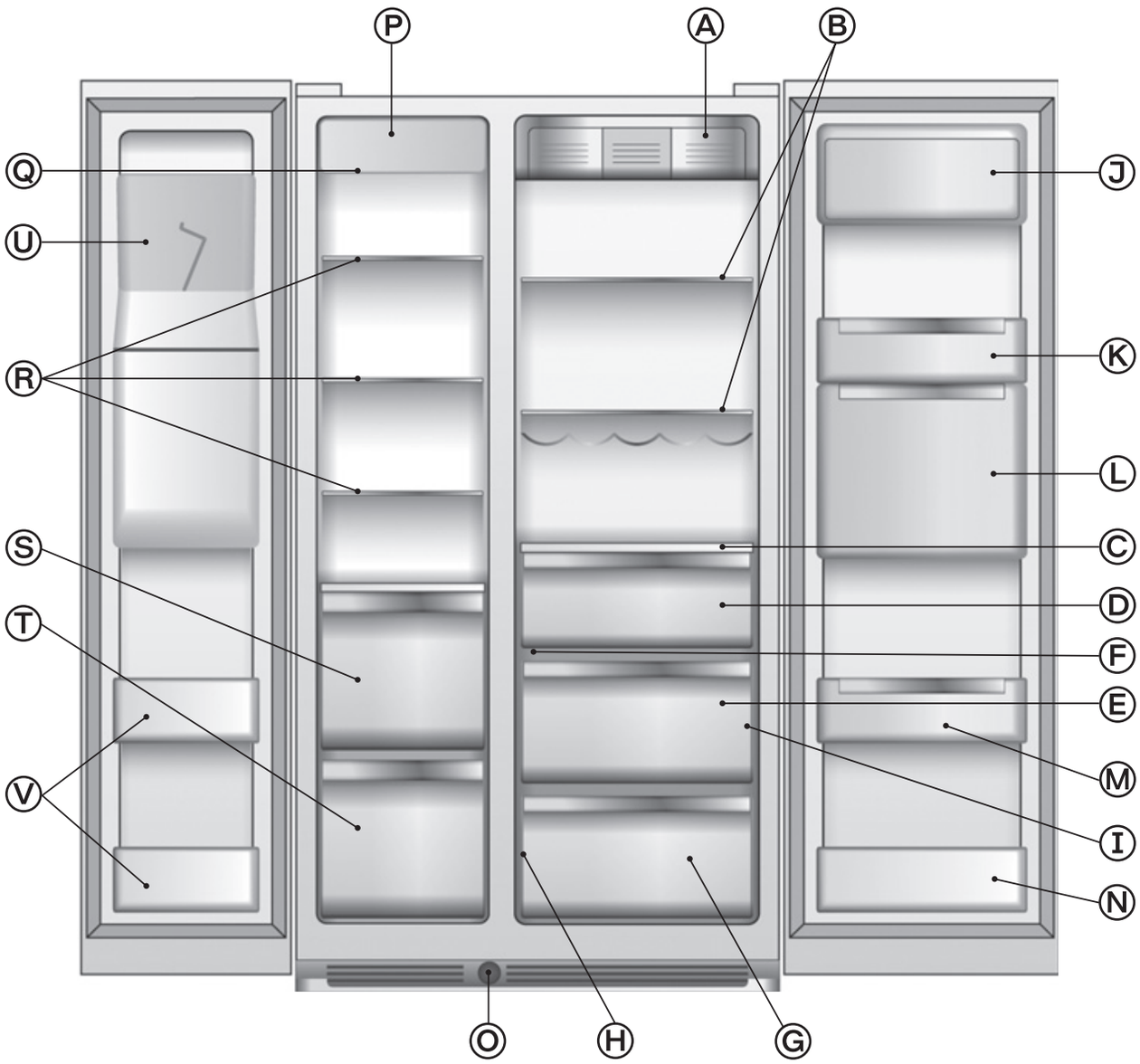

Refrigerator Compartment

A. Inside light (depending on model)
B. Shelves
C. Shelf - drawer lid
D. Snack drawer (depending on model)
E. Crisper drawer
F. Crisper drawer moisture control (where provided)
G. Meat / crisper drawer
H. Meat / crisper drawer temperature control (where provided)
I. Rating plate
J. Dairy compartment
K. Door trays
L. Fresh compartment and Nature Fresh (where provided)
M. 2 litre door tray with bottle holder (where provided)
N. 0.75 litre door tray
O. Water filter (depending on model)

Freezer Compartment

P. Automatic ice maker
Q. Inside light
R. Glass shelves / racks (depending on model)
S. Drawer / top basket (depending on model)
T. Drawer / bottom basket (depending on model)
U. Ice container
V. Door trays

Guide to the inside parts

Hotpoint

GB

Removing and repositioning the refrigerator compartment and freezer shelves.
The shelves can be positioned as required. The glass shelves are strong enough to hold bottles, milk cartons and heavy food, however, take care not to bang products on the shelves. To remove the shelves: pull the shelf out as far as it goes, then lift and remove it.

Removing the crisper or meat drawer:
1. slide the drawer out as far as it goes;
2. with one hand underneath the drawer, lift and pull it out;
3. the drawer will come off the runners and can be pulled out further;
4. to remove it completely, the drawer must be turned: front end up, rear end down.

Removing and refitting the glass drawer lid.
Lift the front of the frame about 10 cm with one hand, then lift the back of the frame and pull it out with the other.

To replace the lid follow the inverse procedure.
Note: To remove the drawers and lids in the freezer compartment follow the same procedure as for the refrigerator.

Meat/vegetable drawer temperature control device.



- The cold air is conveyed inside the meat drawer through an opening between the refrigerator compartment and the freezer compartment. In this way the temperature inside the meat drawer is kept lower than the rest of the refrigerator. The air flow can be adjusted by means of the special slider.
- To store vegetables in the meat drawer, shift the control device all the way to the left, to the vegetables setting. This avoids possible damage due to the vegetables freezing.

Crisper moisture control device.



- The level of humidity inside the crisper can be adjusted by moving the slider in the desired position.
- By moving the slider to the far right, humidity will be eliminated from the compartment. This setting is better for preserving fruits and vegetables with skin.
- By moving the slider to the far left, humidity is maintained inside the compartment. This setting is better for preserving leaf vegetables.

Using the appliance

GB

First use

Connect the appliance to the water system and power supply (refer to the Installation manual).
When connecting the appliance to the power supply, the display will show the temperatures preset by the manufacturer.

Note: Reaching the preset temperatures requires a variable amount of time. This time depends on several factors (times the door is open, amount of food stored, ambient temperature). Average time is between 2 to 3 hours.

Guide to selecting functions

Freezer temperature
The factory-set ideal temperature is -18°C.
As soon as the freezer compartment reaches the required temperature, it is automatically displayed. To change the temperature, press the button until the display shows the temperature required .

Refrigerator temperature
The factory-set ideal temperature is +5°C.
To change the temperature, press the button until reaching the temperature required.

Ice mode
This function enables to select the type of ice desired: crushed ice or ice cubes . For further information refer to the section “Using the ice and water dispenser” section.

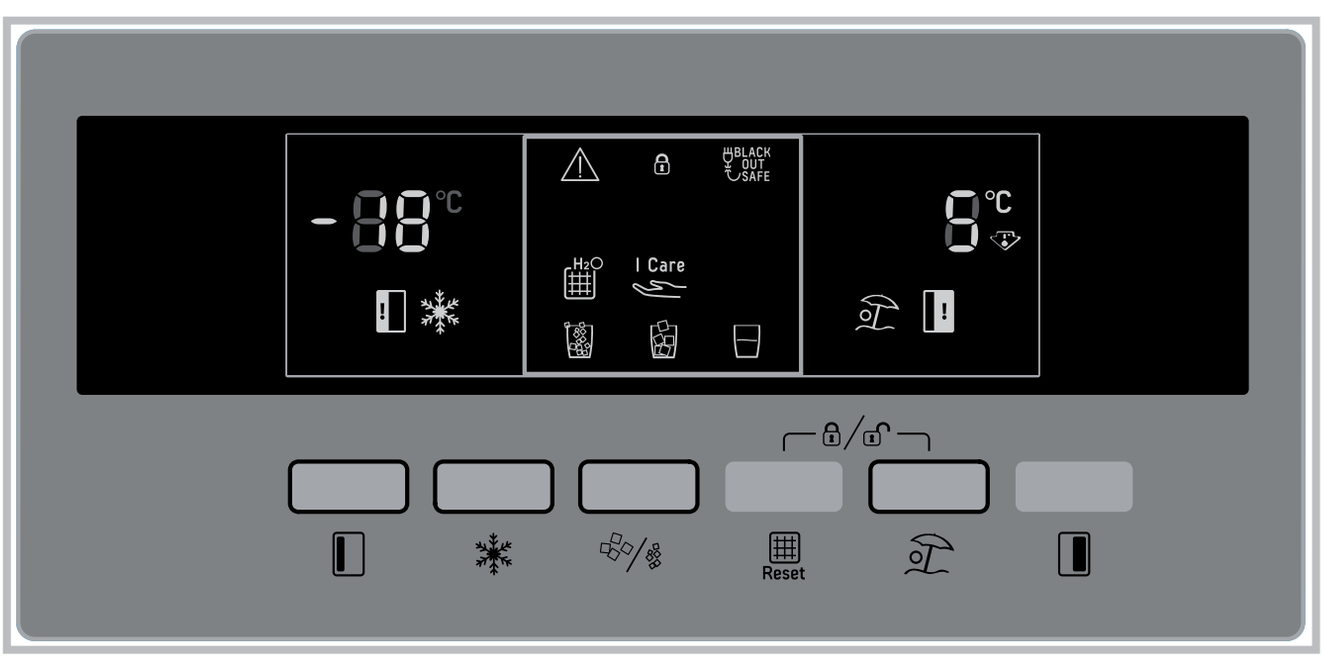

Alarms

In the event of an alarm, the acoustic alarm and indicator lights are activated.
Important: To disable the acoustic signal, press the **Reset** button above the alarm icon.

Door open alarm
The door alarm symbol lights up and the acoustic alarm is activated when one or both doors of the refrigerator and/or freezer have remained open.
When the doors are left open for more than 2 minutes, the symbol flashes and an acoustic signal sounds.

Operation alarm
The activation of the acoustic alarm and the appearance of a letter code on the display indicates a problem with the appliance. If this happens, call customer service. You will be asked to provide the letter code shown on the display instead of the temperature.

Operation symbols

Water filter
This symbol indicates the state of the water filter.
The filter symbol is blue (green on some models) on new products, or after the filter cartridge has been replaced. When the icon becomes yellow, the filter life is almost exhausted and the filter cartridge will need replacing shortly.
When the icon becomes red, the filter will be replaced.

Important: Only replace the cartridge when the symbol on the display becomes red. After replacing the filter cartridge, press the **Filter Reset** button, until the icon becomes blue (or green).
The **Filter Reset** button will not work if the filter icon is already blue (or green).
The water filter is located under the freezer compartment door.

Optional functions

Control panel lock function
This function locks/unlocks the buttons on the control panel and the ice and water dispenser in order to prevent accidentally changing settings or switching off the appliance.
The panel can be locked by pressing both the **Fast freeze** button on the left of the panel and the **Vacation** button on the right of the panel at the same time, for about 3 seconds: the symbol will come on and an acoustic alarm will indicate activation of the function.
To deactivate the function, carry out the same procedure until the symbol goes off.

Super freeze
This function must be activated before freezing fresh food. To activate the function, press the : button until the **Super freeze** symbol appears. The function is automatically deactivated after 24 hours, or manually by pressing again the button.

Holiday
This function deactivates the refrigerator compartment if the user is going away for sometime.
This function can be activated or deactivated by pressing the button. The relevant icon will come on and the displayed temperature of the refrigerator compartment will be replaced by a dash. To reactivate the refrigerator compartment, repeat the operation.
After activating the function, remove perishable food from the refrigerator compartment and keep the door closed, since the refrigerator maintains an adequate temperature for preventing the formation of odours..

Using the ice and water dispenser

GB

First use

When the ice and water dispenser is used for the first time, the first ice cubes and water coming out of the dispenser may have an unpleasant taste and should therefore be discarded.

Ice Mode

Press the “Ice Mode” button to select the type of ice require and to activate/deactivate the automatic ice dispenser.

= ice cubes

= crushed ice

no symbol= automatic ice dispenser is deactivated

Important: if the appliance is not connected to the water line, the automatic ice dispenser must be deactivated.

To dispense ice:

1. Press the ice mode button and select the required type of ice.
2. Press a rigid glass against the ice dispenser lever. Hold the glass close to the dispenser opening so that ice does not fall outside of the glass.
3. Press lightly on the lever to activate the ice dispenser. Pressing hard will not result in faster dispensing or greater quantities.
4. To stop dispensing, remove the glass slowly so that ice does not fall outside the glass.
5. Do not use fragile glasses to dispense ice.

Water dispensing

To dispense water press a glass against the water dispenser lever, removing the glass to stop dispensing; at the same time the light inside the dispenser comes on, and goes off when the lever is released.
It is not necessary to press hard on the levers to activate the dispenser. Pressing hard will not result in faster dispensing or greater quantities.

“I Care”

I Care saves energy. To activate/deactivate the function, press both the “Reset” and the “Ice Mode” buttons at the same time until you hear a signal. If the function is activated, the display will light up only when the control panel is used. Otherwise, only the I Care symbol will be displayed. This operation does not disconnect the appliance from the mains.

Using the automatic ice-maker

Hotpoint

GB

After switching on the refrigerator, it usually takes overnight for the first ice cubes to form.
When selecting crushed ice, the cubes are crushed just before being dispensed, therefore the crushed ice may come out with a slight delay. Noise from the ice crusher is normal, and pieces of ice may vary in size.
When changing from crushed ice to ice cubes, a small amount of crushed ice may come out together with the first cubes.
Normal ice production consists of about 7 to 8 batches of ice cubes in a 24-hour period. The quantity and size of the ice cubes depend on the mains water pressure.
Ice cubes production can be increased by decreasing the temperature on the freezer compartment.
Note: Large amounts of ice cubes should be taken directly from the bucket, and not from the dispenser.

NOTE: In order to increase the amount of available space, the ice drawer can be remover from the freezer compartment. In this case, remember to switch the ice maker off, or ice production will continue.

Changing a water filter cartridge

GB



1. Locate the water filter cartridge cap below the freezer compartment door. Rotate the cap counterclockwise to a vertical position and pull the cap and filter cartridge out through the base grille.

Note: Since there is water in the cartridge, some spilling may occur.



2. Remove the cartridge cap by sliding it off the end of the old cartridge. DO NOT DISCARD THE CAP.



3. Take the new cartridge out of its packaging and remove the protective cover from the o-rings.



4. Slide the cartridge cap onto the new cartridge as shown.



5. With cartridge cap in the vertical position, push the new filter cartridge into the base grille until it stops. Rotate the cartridge cap clockwise to a horizontal position.

6. RUN WATER THROUGH THE DISPENSER UNTIL THE WATER RUNS CLEAR (about 9-14 litres or 6-7 minutes). This will clean the system and clear air from the lines.

Note: as air is cleared from the system, water may spurt out of the dispenser.

Ordering replacement filters
To order more water filter cartridges, please contact your after-sales service.

Troubleshooting guide

Hotpoint

GB

Before contacting After-sales Service...

Operation problems are often due to minor causes that can be found and fixed without using any tools.
Noises from the appliance are normal, since the fans and compressors for controlling its operation switch on and off automatically.

Some noises can be reduced by:

- Levelling the appliance and installing it on a flat surface
- Separating and preventing contact of the appliance with the cabinets
- Making sure the inside parts are correctly positioned
- Making sure the bottles and containers are not touching each other.

Some possible operation noises:

- Hissing when the appliance is switched on the first time or after a long period.
- Gurgling when the refrigerant enters the pipes.
- Humming when the water valve or fan are activated.
- Rattling when the compressor starts up or when the ice drips in the bucket.
- A sudden thud when the compressor starts up or stops.

When you hear these noises...

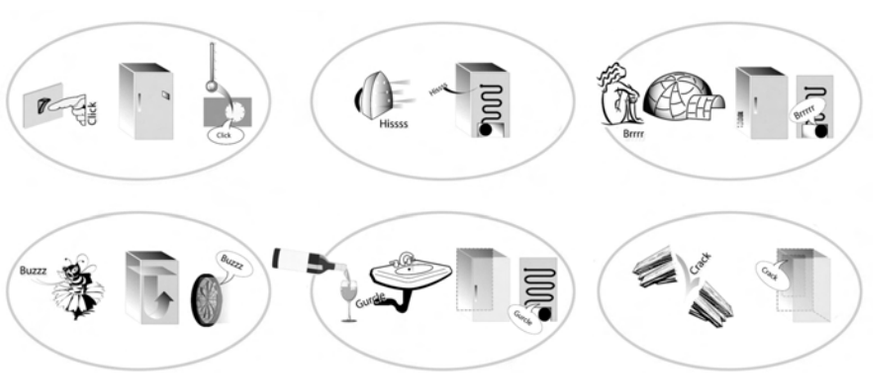

...your appliance is alive!!!

Problem	Possible causes/solutions
The appliance does not work:	• Is the power cable plugged into a socket powered with the right voltage? • Have you checked the protection devices and fuses of your home's electrical system?
The motor seems to run constantly:	• Is the condenser free of dust and fluff? • Are the doors properly closed? • Are the door seals intact? • On hot days or when the room is warm, it is normal for the motor to run longer. • If the appliance door has been left open for a long time or if large amounts of food have been introduced, the motor will run longer in order to cool the inside of the appliance.

Troubleshooting guide

GB

Moisture has accumulated:	• Make sure the air ducts inside the compartment are not blocked and thus preventing the circulation of air. • Make sure food is properly packaged. Dry any wet food containers before placing them in the appliance. • Make sure the doors are not opened too frequently. When the door is opened, the moisture contained in the room air enters the appliance. The more often the door is opened, the faster moisture accumulates, especially if the room itself is very humid. • If the room is very humid, it is normal for moisture to accumulate inside the appliance.
There is water in the defrost pan:	• This is normal in hot and humid weather. The pan can even be half full. Make sure the refrigerator is level so that water does not spill from the pan.
If the appliance temperature is too high:	• Are the appliance controls correctly adjusted? • Has a large amount of food been placed in the appliance? • Make sure the doors are not opened too frequently and check that the doors close properly. • Make sure the air ducts inside the compartment are not blocked and thus preventing the circulation of cold air.
The appliance's in contact with the seal is hot to the touch:	• This is normal in hot weather and when the compressor is working.
The doors do not open and close properly:	• Make sure no food packages are blocking the door. • Make sure the inside parts or the automatic ice-maker are not incorrectly positioned. • Make sure the door seals are not dirty or sticky. • Make sure the appliance is level.
The light does not work:	• Have you checked the protection devices and fuses of your home's electrical system? • Is the power cable plugged into a socket powered with the right voltage? • Is the lamp burnt?
The automatic ice-maker does not work:	• Has the freezer had enough time to become cold? With a new appliance this may take overnight. • Is the automatic ice-maker ON/OFF button set to ON? • Is water reaching the automatic ice-maker? Is the water cock open? The filter may be clogged or not correctly installed. Firstly, check the filter installation instructions to make sure the filter is correctly fitted and not clogged. If installation or clogging is not the problem, call qualified personnel or a technician.
The dispenser does not work:	• Is the freezer compartment door closed? • Is the ice bucket correctly installed?
The ice dispenser stops working:	• Are the ice cubes stuck because the ice dispenser has not been used for some time? Shake the ice bucket to separate the cubes and increase the holding capacity. It is advisable to throw away the old ice cubes and make new ice. • Has the ice dispenser lever been pressed for too long? Wait about 3 minutes for the dispenser motor to reset.

Troubleshooting guide

Hotpoint

The ice has an unpleasant smell or taste:

- Has the ice absorbed bad odours? Is the quality of the water good? Water containing minerals may require a filter.
- Is the food properly covered?
- Is the ice bucket/freezer compartment clean? Follow the instructions for the correct ice dispenser water supply.
- Are the pipes correctly connected to the ice dispenser? The first ice cubes coming out of the dispenser may have an unpleasant taste, therefore it is advisable to discard them and make new ice cubes.

The dispenser does not dispense ice when the lever is pressed:

- Change the ice selection from cubes to crushed ice, or vice versa, in order to remove any ice blocks. If the dispenser still does not dispense ice, wait a couple of minutes and repeat the operation.

If the dispenser does not dispense water when the lever is pressed:

- During the first delivery, there will be a delay of 15 to 20 seconds due to the system needing to fill with water.
- If the appliance is kept at very cold temperatures and the meat drawer temperature control shutter is open, water delivery might be temporarily interrupted. Closing the shutter will cause water delivery to recommence within the next 12 hours.

There is condensation in the ice and water dispenser:

- Press the corresponding button (marked with A in the figure) to activate the anticondensation function.

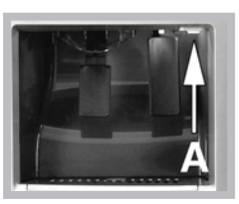

The automatic ice-maker noises:

Since the appliance is equipped with an automatic ice-maker, you may hear a humming sound (coming from the water valve), water trickling and the sound of ice falling into the bucket.

The lamp does not work:

1. Always unplug the appliance.
2. Refer to chapter “Maintenance and Cleaning”

Assistance

GB

Guarantee

12 Months Parts and Labour Guaramtee
Your appliamce has the benefit of our manufacturer's guarantee, which covers the cost of breakdown repairs for twelve month the date of purchase.

This gives you the reassurance that if, within that time, your appliance is proven to be defective because of either workmanship or materials, we will, at our discretion, either repair or replace the appliance at no cost to you.

This guarantiee is subject to the following conditions:
- The appliance has been installed and operated correctly and in accordance with our operating and maintenance instructions.
- The appliance is used only on the electricity or gas supply printed on the rating plate.
- The appliance has been used for normal domestic purposes only.
- The appliance has not been altered, serviced, maintained, dismantled, or otherwise interfered with by any person not authorised by us.
- Any repair work must be undertaken by us or our appointed agent.
- Any parts removed during repair work or any appliance that is replaced become our property.
- The appliance is used in the United Kingdom or Republic of Ireland.

The guarantee **does not cover:**
- Damage resulting from transportation, improper use, neglect or interference or as a result of improper installation.
- Replacement of any consumable item or accessory. These include but are not limited to: plugs, cables, batteries, light bulbs, fluorescent tubes and starters, covers and filters.
- Replacement of any removable parts made of glass or plastic.

THIS GUARANTEE WILL NOT APPLY IF THE APPLIANCE HAS BEEN USED IN COMMERCIAL OR NON-DOMESTIC PREMISES.

5 Year Parts Guarantee
Hotpoint also offers you a free 5 year parts guarantee. This additional guarantee is conditional on you registering your appliance with us and the parts being fitted by one of our authorised engineers.
There will be a change for our engineer's time. To activate the extra parts warranty on your appliance, simply call our registration line on **0870 6092094 (ROI 01 230 0800).**

Extended Guarantees
We offer a selection of repair protection plans that enable you to fully cover yourself against the expense of repair bills for the life of your policy. To find the ideal plan for you please call our advaice line on **08709 088 088 (ROI 01 230 0233)**

Free Helpdesk Service
We have a dedicated team who can provaide free advice and assistence with your appliance if you experience any technical difficulties within the first 90 days of ownership. Simply call our Hotpoint Service Hotline on **08709 066 066 (ROI 0818 313 413)** for telephon assistance, or where necessary, to arrange for an engineer to call. If we cannot resolve the technical problem we will replace your machine or, if you prefer, give you your money back.

Assistance

Hotpoint

GB

After Sales Service

No one is better placed to care for your appliance during the course of its working life than us - the manufacturer.

Essential Contact Information

Hotpoint Service
We are the largest service team in Europe offering you access to 400 skilled telephon advisors and 1100 fully qualified engineers on call to ensure you receive fast, reliable, local service.

UK: 08709 066 066
Republic of Ireland: 0818 313 413
www.hotpointservice.co.uk

Please note: our advisors will require the following iinformation:
- **model number**
- **serial number**
- **parts and accessoires**

We supply a full range of genuine replacement parts as well as accessory products that protect and Hygienically clean your appliance to keep it looking good and functioning efficiently throughout its life.

UK: 08709 077 077
Republic of Ireand: 0818 313 413
www.hotpointservice.co.uk

Appliance registration
We want to give you additionl benefits of ownership. To activate your free 5 year parts guarantee you must register your appliance with us.

UK: 0870 6092094
Republic of Ireland: 01 230 0800
www.hotpointservice.co.uk

Indesit Company UK Ltd. Morley Way, Peterborough, PE2 9JB
Indesit Company Unit 49 Airways Industrial Estate, Dublin 17

Recycling & Disposal Information

As part of Hotpoint's continued commitment to helping the environment, Hotpoint reserves the right to use quality, recycled components to keep down customer costs and minimise material wastage.

Please dispose of packaging and old appliances carefully. To minimise the risk of injury to children, remove the door, plug and cut the mains cable off flush with the appliance. Dispose of these parts separately to ensure that the appliance can no longer be plugged into a mains socket, and the door cannot be locked shut.

Electrical connection for Great Britain and Ireland only

GB

Warning - this appliance must be earthed

Fuse replacement
If the mains lead of this appliance is fitted with a BS 1363A 13amp fused plug, to change a fuse in this type of plug use an A.S.T.A. approved fuse to BS 1362 type and proceed as follows:

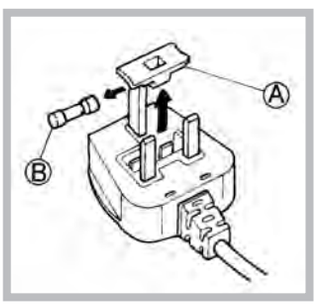

1. Remove the fuse cover (**A**) and fuse (**B**).
2. Fit replacement 13A fuse into fuse cover.
3. Refit both into plug.

Important:
The fuse cover must be refitted when changing a fuse and if the fuse cover is lost the plug must not be used until a correct replacement is fitted.
Correct replacement are identified by the colour insert or the colour embossed in words on the base of the plug.
Replacement fuse covers are available from your local electrical store.

For the Republic of Ireland only
The information given in respect of Great Britain will frequently apply, but a third type of plug and socket is also used, the 2-pin, side earth type.

Socket outlet / plug (valid for both countries)
If the fitted plug is not suitable for your socket outlet, please contact KitchenAid Service for further instruction. Please do not attempt to change plug yourself. This procedure needs to be carried out by a qualified technician in compliance with the manufactures instructions and current standard safety regulations.

195085490.00
501961502064