MARVEL

OWNER'S GUIDE & SERVICE MANUAL

MARVEL UNDERCOUNTER REFRIGERATION



Model: MONP215-SS01A

WELCOME

Welcome to the Marvel Experience!

Thank you for choosing our quality product to add to your home. We are thrilled to welcome you to our growing community of Marvel owners, who trust in our products and our support.

The information in this guide is intended to help you install and maintain your new Marvel undercounter model to protect and prolong its lifetime. We encourage you to contact our Technical Support team at (616) 754-5601 with any questions.

Got a Marvelous Design?

We would love to see how your Marvel product looks in its new home. You can send us photos of your installed product at marketing@marvelrefrigeration.com, and we might feature your Marvel home design on our website and social media!

Warranty Registration

It is important you register your product warranty after taking delivery of your appliance. You can register online at www.marvelrefrigeration.com.

The following information will be required when registering your appliance:
Serial Number
Date of Purchase
Dealer's Name and Address

Online registration available at marvelrefrigeration.com

The serial number is located on the back of the cabinet near the top.

TABLE OF CONTENTS

Tip: Click on any section below to jump directly there

Safety

- Important Safety Instructions

Installation

- Unpacking Your Appliance
- Electrical
- Cutout & Product Dimensions
- Installing Your Appliance
- Door Reversal
- Installing The Water Supply
- Installing the Drain plumbing

Maintenance

- Care and Cleaning

Operating Instructions

- Using Your Electronic Control
- Ice Maker Operation

Service

- Obtaining Service
- Troubleshooting
- Wire Diagram
- Product Liability
- Parts List
- Ordering Replacement Parts
- R600a Specifications
- Compressor Specifications
- Warranty

Important Safety Instructions

Warnings and safety instructions appearing in this guide are not meant to cover all possible conditions and situations that may occur. Common sense, caution and care must be exercised when installing, maintaining or operating this appliance.

Recognize Safety Symbols, Words and Labels

⚠ WARNING

WARNING - You can be killed or seriously injured if you do not follow these instructions.

⚠ CAUTION

CAUTION - Hazards or unsafe practices which could result in personal injury or property/product damage.

NOTE

NOTE - Important information to help assure a problem-free installation and operation.

⚠ WARNING

State of California Proposition 65 Warning:
This product contains one or more chemicals known to the State of California to cause birth defects or other reproductive harm.

⚠ WARNING

State of California Proposition 65 Warning:
This product contains one or more chemicals known to the State of California to cause cancer.

⚠ WARNING

WARNING - This unit contains R600a (isobutane) which is a flammable hydrocarbon. It is safe for regular use. Do not use sharp objects to expedite defrosting. Do not damage refrigerant circuit.

UNPACKING YOUR APPLIANCE

⚠ WARNING

EXCESSIVE WEIGHT HAZARD

Use two or more people to move product.
Failure to do so can result in personal injury.

Remove Interior Packaging

Your appliance has been packed for shipment with all parts that could be damaged by movement securely fastened. Remove internal packing materials and any tape holding internal components in place. The getting started guide is shipped inside the product in a plastic bag along with the warranty registration card and other accessory items.

Important

Keep your carton and packaging until your appliance has been thoroughly inspected and found to be in good condition. If there is any damage, the packaging will be needed as proof of damage in transit. Afterwards, please dispose of all items responsibly.

⚠ WARNING

WARNING - Dispose of the plastic bags which can be a suffocation hazard.

Note to Customer

This merchandise was carefully packed and thoroughly inspected before leaving out facility. Responsibility for its safe delivery was assumed by the retailer upon acceptance of the shipment. Claims for loss or damage sustained in transit must be made to the retailer.

NOTE

DO NOT RETURN DAMAGED MERCHANDISE TO THE MANUFACTURER - FILE THE CLAIM WITH THE RETAILER.

⚠ CAUTION

If the appliance was shipped, handled or stored in other than an upright position for any period of time, allow the appliance to sit upright for a period of at least 24 hours before plugging in. This will assure oil returns to the compressor. Plugging the appliance in immediately may cause damage to internal parts.

⚠ WARNING

WARNING - Help Prevent Tragedies

Child entrapment and suffocation are not problems of the past. Junked or abandoned refrigerators are still dangerous, even if they sit outside for “just a few hours”.

If you are getting rid of your old refrigerator, please follow the instructions below to help prevent accidents.

Before you throw away your old refrigerator or freezer:

- Take off the doors or remove the drawers.
- Leave the shelves in place so children may not easily climb inside.

ELECTRICAL

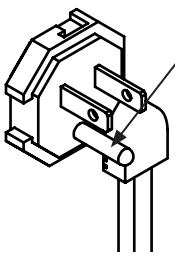

Electrical Connection

A grounded 115 volt, 15 amp dedicated circuit is required.

This product is factory equipped with a power supply cord that has a three-pronged, grounded plug. It must be plugged into a mating grounding type receptacle in accordance with the National Electrical Code and applicable local codes and ordinances. If the circuit does not have a grounding type receptacle, it is the responsibility and obligation of the customer to provide the proper power supply. The third-ground prong should not, under any circumstances, be cut or removed.

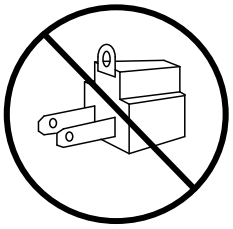

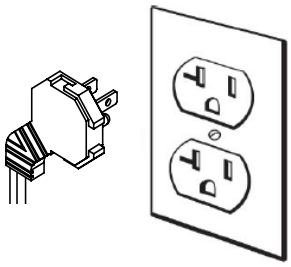

NOTE

Ground Fault Circuit Interrupters (GFCI) are prone to nuisance tripping which will cause the appliance to shut down. GFCI's are generally not used on circuits with power equipment that must run unattended for long periods of time, unles required to meet local building codes and ordinances.

⚠ WARNING

Shock Hazard
Electrical Grounding Required

Never attempt to repair or perform maintenance on the unit until the electricity has been disconnected.

Never remove the round grounding prong from the plug and never use a two-prong grounding adapter.

Altering, cutting or removing the power cord, removing the power plug, or direct wiring can cause serious injury, fire, loss of property and/or life, and will void the warranty.

Never use an extension cord to connect power to the unit.

Always keep your working area dry.

CUTOUT & PRODUCT DIMENSIONS

Prepare Site

Your Marvel product has been designed for either freestanding or built-in installation. When built-in, your unit does not require additional air space for top, sides, or rear. However, the front grille must NOT be obstructed, and clearance is required for an electrical connection in the rear.

CAUTION

Unit can NOT be installed behind a closed cabinet door. If you would like to align the face of the unit with other adjacent cabinet doors, you may need to alter the wall just behind the frain connection on the unit to accommodate the drain.

Cutout Dimensions

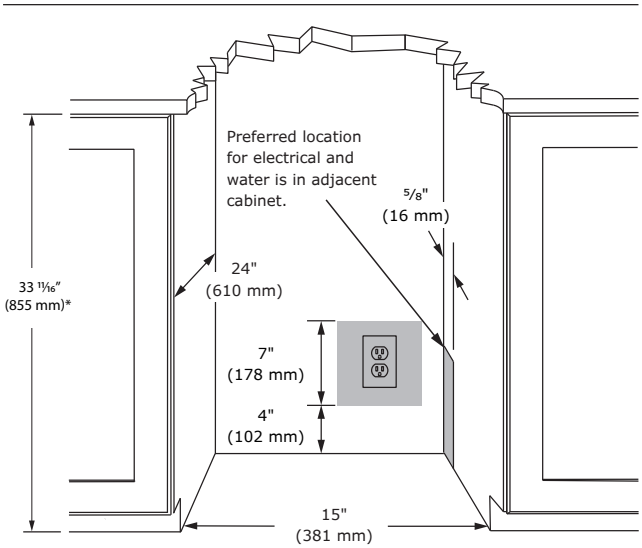

Product Dimensions

Rear

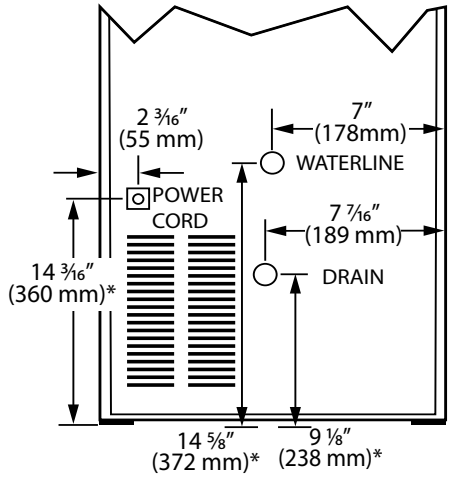

Front

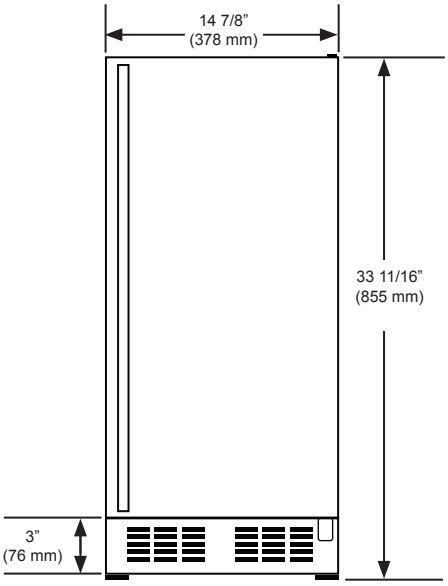

Top

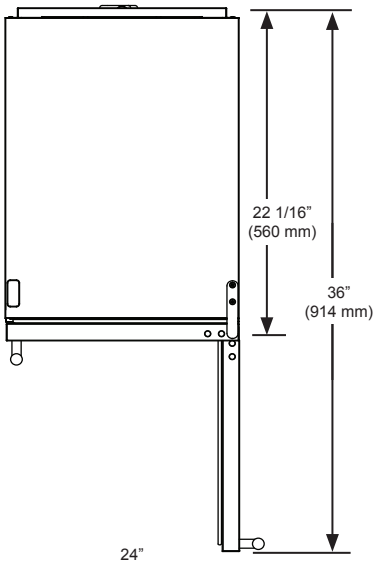

Side

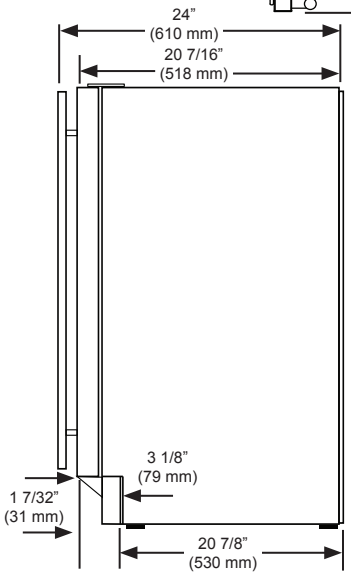

*All height dimensions are based upon default factory settings with legs set at minimum height. Maximum adjustment with factory-installed legs is + 1/2".

Leveling Information

1. Use a level to confirm if the unit is level. Level should be placed along top edge and side edge as shown.

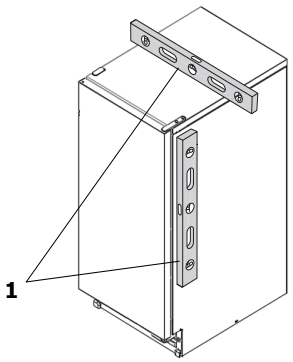

2. If the unit is not level, adjust the legs on the corners of the unit as necessary.

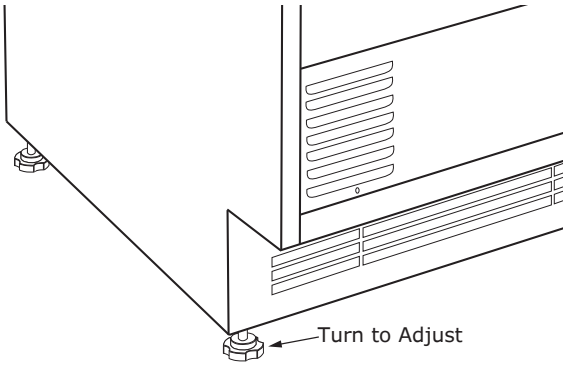

3. Confirm the unit is level after each adjustment and repeat the previous steps as needed.

Installation Tip

If the room floor is higher than the floor in the cutout opening, adjust the rear legs to achieve a total unit rear height of 1/8” (3 mm) less than opening’s rear height. Shorten the unit height in the front by adjusting the front legs. This allows the unit to be gently tipped into the opening. Readjust the front legs to level the unit after it is correctly positioned in the opening.

Installation

1. Plug in the power/electrical cord.
2. Gently push the unit into position. Be careful not to entangle the cord or water and drain lines, if applicable.
3. Re-check the leveling, from front to back and side to side. Make any necessary adjustments. The unit’s top surface should be approximately 1/8” (3 mm) below the countertop.
4. Install the anti-tip bracket.
5. Remove interior packing material and wipe out the inside of the unit with a clean, water-dampened cloth.

Install Optional Longer Legs

This machine comes with an additional set of 4 adjustable legs that allow you to adjust your machine another 1/2” higher than the maximum height of the factory-installed legs.

To install:

1. Carefully tip and block machine high enough to remove factory-installed legs. Remove legs simply by rotating them counter clockwise until completely out.
2. Install new legs to the desired height.

⚠ CAUTION

The longer legs are designed to raise your machine up to 1/2” higher than the factory-installed legs. DO NOT attempt to tighten the longer legs all the way in, or you will damage the bottom of the machine. The minimum height adjustment with the longer legs installed should never be less than 1/2”.

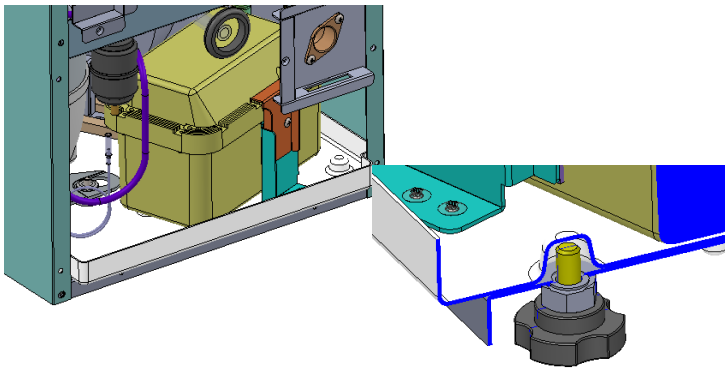

DOOR REVERSAL

Reverse Door Swing

The hinges are attached to the right-hand side of the door when the product is shipped from the factory. However, the ice maker is designed so that the hinges may be installed on either side. If the hinges are moved to the left-hand side, the door will open to the left.

To Reverse the Door Swing

1. Remove hinge hole cover and grille.

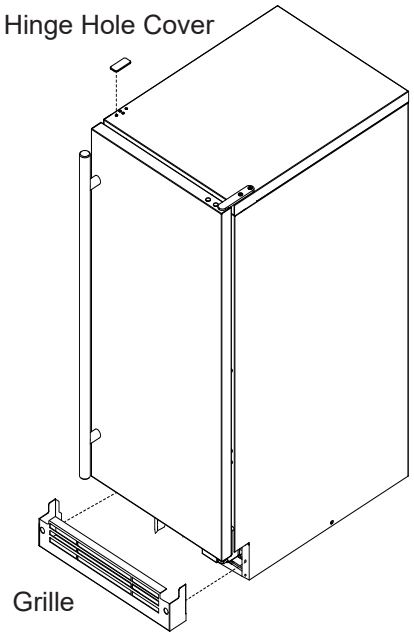

2. With one hand holding the door, remove the top hinge by taking out the 2 screws securing it to the top of the cabinet.

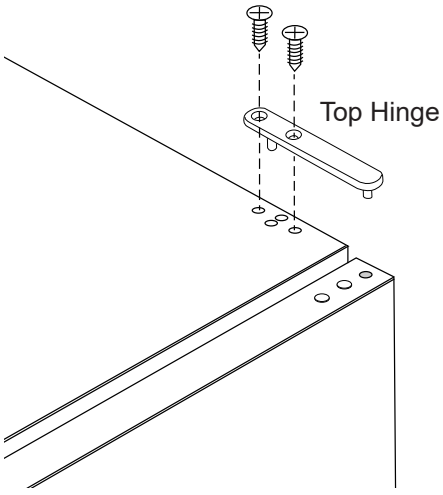

3. With both hands, tilt the top of the door out toward you while carefully lifting it from the bottom hinge pin. Set door aside.

4. Remove bottom hinge by taking out 3 screws.

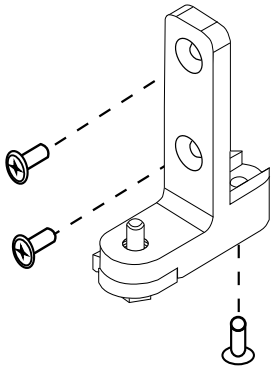

5. Prepare hinge for installation on the other side of unit, by removing the hinge pin, flipping the door stopper, and reinstalling the hinge pin and door stopper.

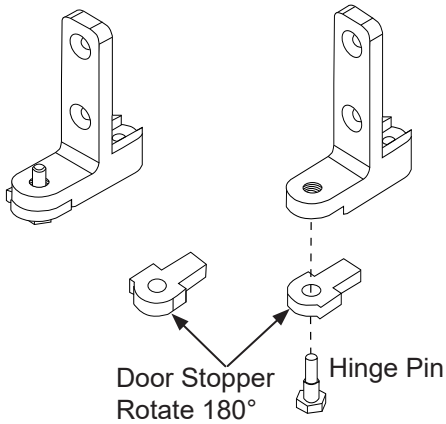

6. Install hinge assembly on opposite side of the machine (see step 4).

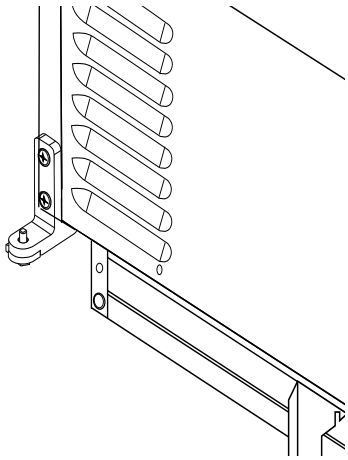

DOOR REVERSAL

7. Remove door stop from bottom of door by taking out 2 screws. Remove flange.

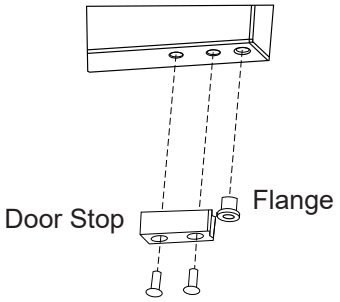

8. At the other end of the door, remove the stop hole caps.

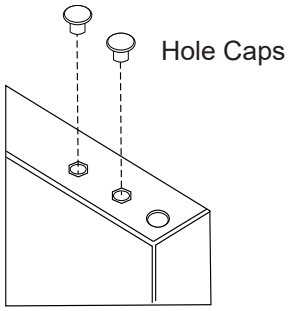

9. Install door stop and flange (see step 7).
10. Install door stop hole caps on the other end.
11. Rotate door 180°.

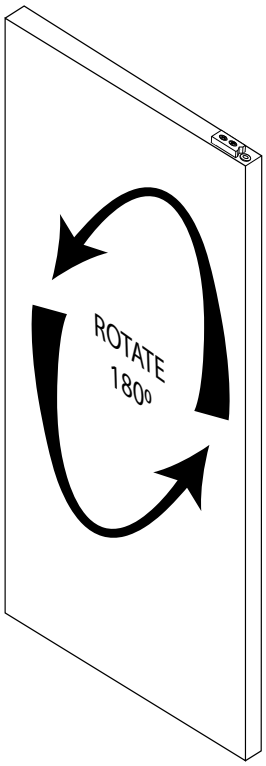

12. Remove door gasket from the inside of the door, rotate it 180°, and reinstall. For proper seal, the smaller “window” of the gasket must be at the top.

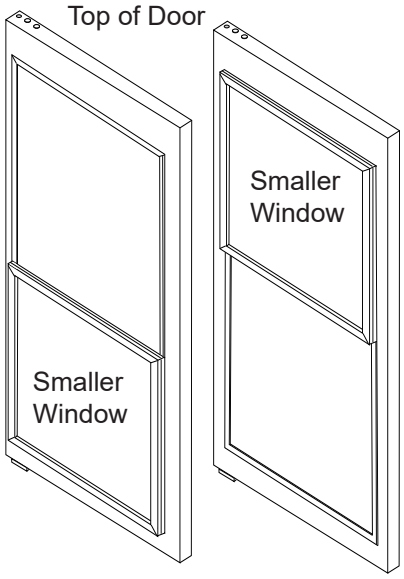

13. Lift door on to bottom hinge.
14. While holding the door, use 2 screws to secure top hinge.

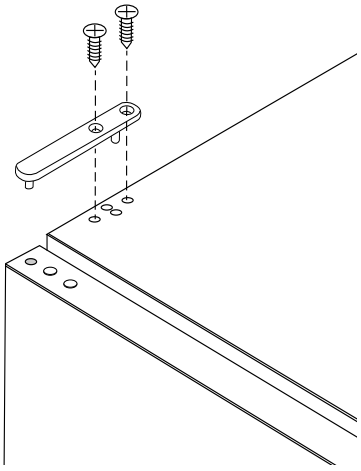

15. Install hinge hole cover.
16. Install grille.
17. Check door for proper swing.

USING YOUR ELECTRONIC CONTROL

Display Panel

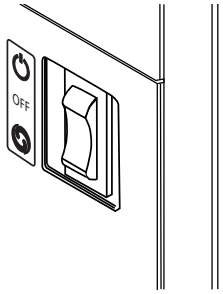

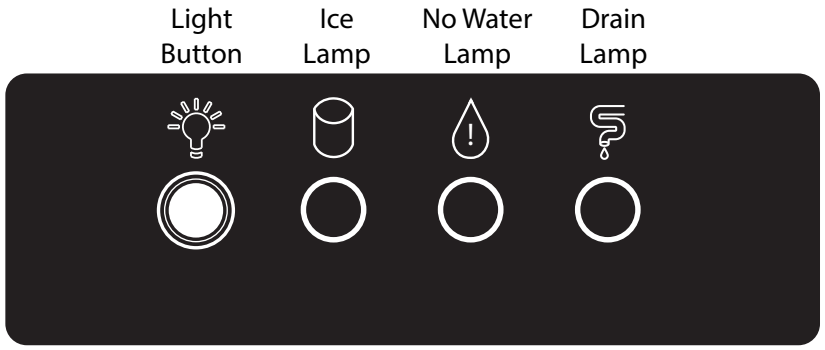

Control Function Guide

FUNCTION	COMMAND	NOTES
Light Button	Press and release	Light turns on or off
Ice Lamp	Lights up when operation switch is set to “ICE”	
No Water Lamp	Lights up to indicate low water supply	
Drain Lamp	Lights up to indicate activation of the drain valve.	

NOTE:

When door is closed, interior UV light comes on.

Sabbath Mode

- Enable the Sabbath Mode by pressing and holding the Light Button for 3 seconds.
- To return the machine to standard operation, press and hold the Light Button for 3 seconds.

What Happens During Sabbath Mode

- All display lights turn off.
- Interior UV lighting remains off.
- Ice contiues to be produced. The ice in the bin slowly melts. When the level of the ice reaches a certain point, the machine automatically begins making more ice.
- The drain pump continues to remove water from the machine. As water from the melting ice fills the drain pump reservoir, the pump automatically turns on and removes the waste water.

Cleaning Signal

- After cumulative 6 months of ice making, the machine will signal that is time to run a cleaning cycle. On the display, the ice, no water, and drain lamps each flicker twice sequentially. The flickering lights continue until the machine’s cleaning function is performed.
- Please see the Cleaning section of this manual for more information.

INSTALLING THE WATER SUPPLY

Water Hookup

Prepare Plumbing

Plan the arrangement of the water supply pipes.
Connect a ¼" diameter copper waterline to the tap water supply line. Install a shutoff valve between the tap water pipe and the product so that the user can operate the valve. Do not install the shutoff valve at the back of the product.
"Do not use a self-piercing valve. If the tap water has a high level of minerals, a pipeline filter will be required.
The pressure of the tap water should be maintained at a level between 20psi (1.4bar) and 80psi (5.5bar).

⚠ CAUTION

Plumbing installation must observe all state and local codes. All water and drain connections MUST BE made by a licensed/qualified plumbing contractor. Failure to follow recommendations and instructions may result in damage and/or harm.

Water Supply Connection

When connecting the water supply, please note the following:

- Before installing the unit and connecting to the cold water supply, review the local plumbing codes.
- **Softened water and water filtered through reverse osmosis is not recommended as it may result in softer ice than desired.**
- Connection to the water main is made with hose-set only.
- Hose-set must be new, not reused, and in compliance with IEC 61770.
- The water line MUST have a shut-off valve in the supply line.
- The water line should be looped into 2 coils. This will allow the unit to be removed for cleaning and servicing. Make certain that the tubing is not pinched or damaged during installation.

⚠ CAUTION

Do not use any plastic water supply line. The line is under pressure at all times. Plastic may crack or rupture with age and cause damage to your home.

Do not use tape or joint compound when attaching a braided flexible water supply line that includes a rubber gasket. The gasket provides an adequate seal – other materials could cause blockage of the valve.

Failure to follow recommendations and instructions may result in damage and/or harm, flooding or void the product warranty.

Use new hose set. Do not reuse old hose set.

⚠ CAUTION

Turn off water supply and disconnect electrical supply to unit prior to installation.

Use caution when handling back panel. The edges could be sharp.

Install Water Supply

1. Install the inlet pipe (1/4" diameter copper pipe) on the wall and connect the water supply valve.
2. Use the inlet pipe after cutting it to the required length.
3. Wash the inlet pipe.
4. Connect the inlet pipe with the copper pipe using the flare nut.
5. Connect the inlet pipe with the water-supply valve of the product using the flare nut.
6. Turn on the tap and check for any leakage.

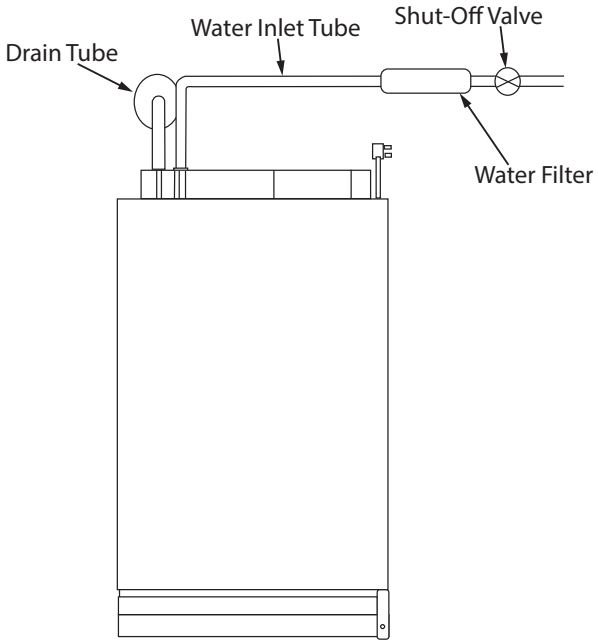

Procedure for Testing Drain System (both gravity and drain pump models)

Drain pump models have a safety feature that will interrupt power to the unit if a high-limit condition occurs to prevent flooding. This safety feature can be initiated by a restriction in the drain system and will continue until high-limit condition is corrected, at which time power will be restored to the unit. Power interruption can be detected when no icons are visible in the display area of the user interface. Once power is returned, a startup chime will sound followed by a self-test, and "OFF" should be visible in the display area.

1. Plug the ice machine into 115v power supply.
2. Place unit in the final installation location.
3. Turn the unit off via the user interface (display will indicate “OFF”). The drain pump will still be operational during off mode if the unit has one.
4. Slowly pour 3-qts of water into the ice storage bin. All water should drain completely.
5. If water drains fully and without power interruption, the drain system has been successfully tested and further installation of the ice machine can be continued.
6. If the water does not drain or a power interrupt occurs, check the following:
   a. There are no kinks or restrictions in the drain line. (Note: Drain line needs to be cut to the required length and any excess tubing should be removed to prevent possible restrictions).
   b. Drain line was run according to the guidelines for maximum allowable rise and run as shown in the table below:

Rise Above Floor Level	8 ft.	9 ft.	10 ft.
Maximum Allowable Drain Line Length	20 ft.	15 ft.	10 ft.

   c. Your drain line is plumbed into an open drain (Figure1).
   d. The vent tube on the back of the unit is open (Figure 2).

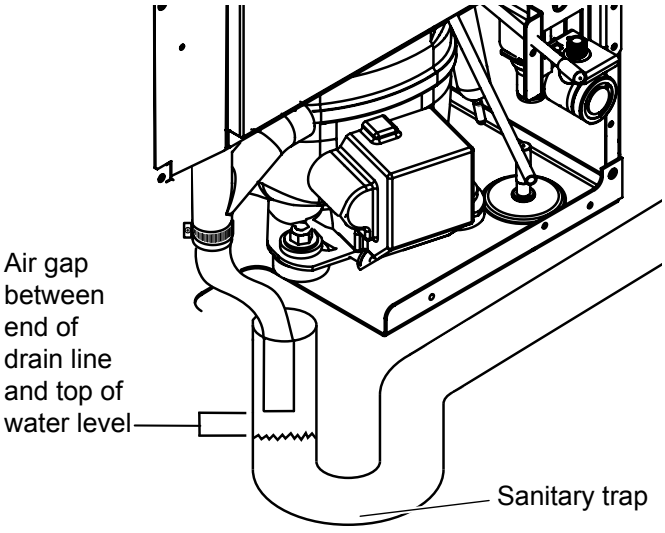

Figure 1: Example of an open drain.

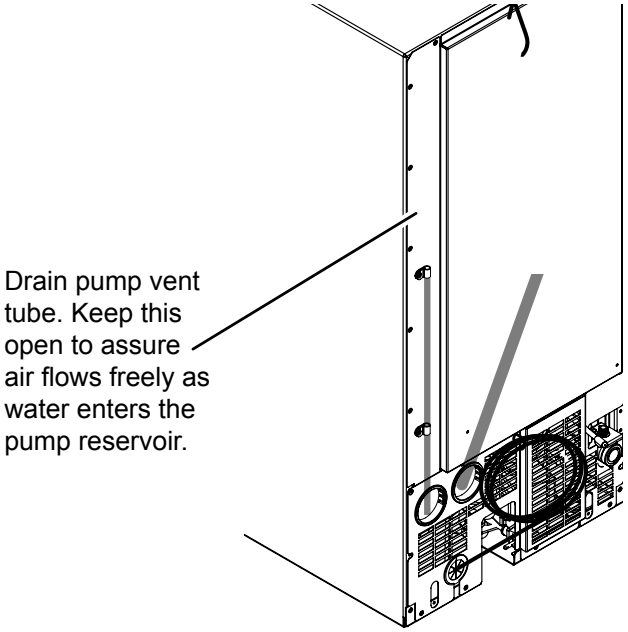

Figure 2: Location of vent tube.

7. After checking the above requirements, repeat step 4 and verify the water drains completely without power interruption. If problems persist call a qualified service technician and/or plumber.

INSTALLING THE DRAIN PLUMBING

Drain

Secure drain hose to back panel

CAUTION

Do not pull or bend the drain hose to avoid damage to the drain pump. Drain hose must be secured to the rear of the machine before connecting to drain.

1. Find hose clamp and screw in the literature package that came with your machine.
2. Secure hose using supplied clamp and screw.

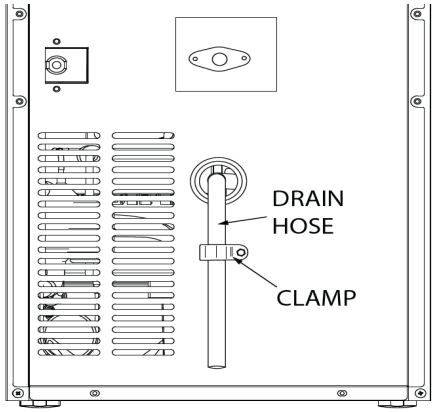

Drain Connection

CAUTION

Failure to connect water supply or drain line connections properly can result in personal injury and property damage. Do not pull the drain hose to avoid damage to drain pump.

CAUTION

The floor drain must be large enough to accommodate drainage from all attached drains. Follow these guidelines when installing drain lines to prevent water from flowing back into the ice maker storage bin and/or potentially flowing on to the floor, which may result in personal injury or property damage.

NOTE

Drain can NOT be located directly below the unit. Unit has a solid base that will not allow the unit to drain below itself.

There is a possibility that hose connections may have loosened during shipment. Verify all connections and fittings are free from leaks.

CAUTION

This equipment is to be installed with adequate backflow protection to comply with applicable federal, state and local codes.

Hookup Drain Pump

See below for typical installations

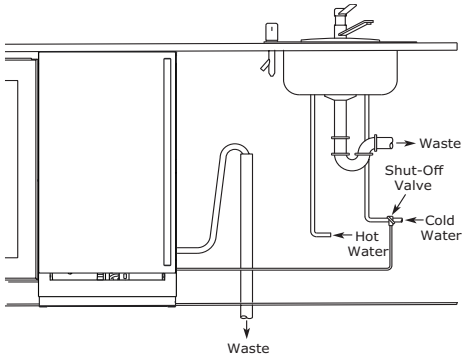

Disposal Assembly

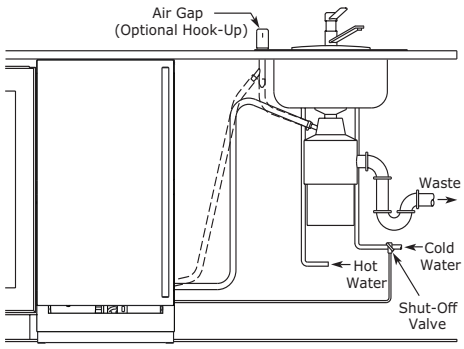

Y-Branch Tailpiece

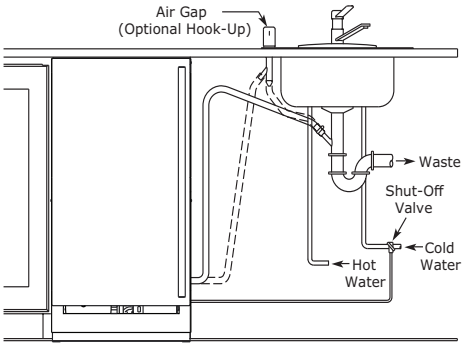

NOTE

The maximum lift for the drain pump is 10 feet. This must be done as close to the rear of the unit as possible.

ICE MAKER OPERATION

Ice

CAUTION

Do not put anything other than ice in the ice bin. Wine or beer bottles are unsanitary and a detached label may block the drain.

CAUTION

If the ice storage bin is full of water, turn off the ice maker and clean the mesh on the bottom of the ice bin.

Ice-Making Process

Water flows into the drum, and as the auger rotates, the water freezes and is ejected upward. Impurities in the water are periodically discharged by the drain valve to create clean ice.

Operation Time

The machine continues to operate until the ice bin is full, which takes about 10 hours (this time will vary slighly based upon ambient and water temperatures). The machine ceases ice production when the ice level reaches the temperature sensing tube located on the right side.

CAUTION

When the door is open, the ice maker cannot detect if the bin is full. Be sure to keep door closed during ice production.

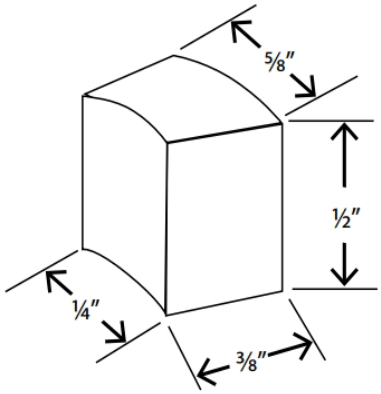

Approximate size and shape of a cube (image not to scale).

Cleaning

NOTE

Use only Marvel Ice Machine Cleaner (S41013789), available for purchase from marvelrefrigeration.com or your dealer. It is a violation of federal law to use this solution in a manner inconsistent with its labeling. Use of any other cleaner can cause damage to the ice machine and will void the warranty. Read and understand all labels printed on the package before use.

Marvel Ice Machine Cleaner is used to remove lime scale and other mineral deposits. Refer to the following steps to initiate the self-cleaning cycle.

Internal Cleaning

Cleaning Signal

- After cumulative 6 months of ice making, the machine will signal that is time to run a cleaning cycle. On the display, the ice, no water, and drain lamps each flicker twice sequentially. The flickering lights continue until the machine's cleaning function is performed.

1. Dilute 2 oz. of Ice Machine Cleaner into two quarts of water.
2. Toggle the lower front mode switch to

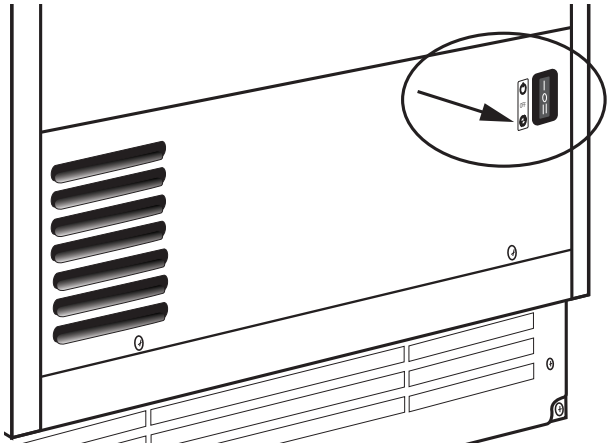

3. After 30 seconds, open the door and add about 1 quart (1 liter) of the cleaning solution into the ice spout.*

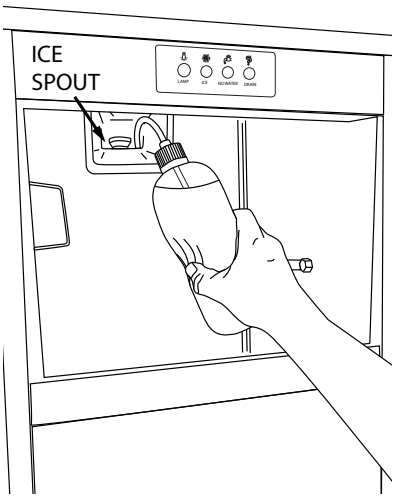

4. The ice maker automatically cleans, drains, and supplies water repeatedly, which takes about 10 minutes.
5. Use a sponge or cloth to clean the inside of the reservoir with the remaining cleaning solution.
6. After 10 minutes, rinse the inside of the reservoir with clean water, pouring some water into the ice spout.
7. Toggle the mode switch to again.
8. After about 10 minutes, the cleaning processes will be completed. Display lights stop flickering.

External Cleaning

If the surface of the door and lever become stained, clean immediately. If the door and/or gasket have spots on the surface, remove the spots using soap and warm water with a non-abrasive cloth or sponge. For stainless steel exterior, use a soft and non-abrasive stainless steel cleaner (such as the liquid variety of Barkeeper's Friend) and a soft lint free cloth.

Clean the Ice Bin

The ice bin should also be cleaned regularly. Combine 1 ounce of bleach with 2 gallons of warm water at 95°F - 115°F (35°C - 45°C) to use as a cleaning solution. Dampen a clean cloth with the cleaning solution and wash the inside of the ice bin. Pour a small quantity of the solution into the drain pipe, then dry the interior.

*Due to the low clearance at the top of the ice bin, a common squeeze bottle is recommended. Squeeze bottles can be found at most convenience stores or purchased online at www.marvelrefrigeration.com, part number 90-54206-08.

Cleaning the Condenser

WARNING

WARNING - Disconnect electric power to the unit before cleaningthe condenser. DO NOT use any type of cleaner onthe condenser unit. Condenser may be cleaned using a vacuum, soft brush, or compressed air.

The condenser should be cleaned 2-3 times a year to remove any lint that has penetrated the condenser. When cleaning the condenser, remove the front lower panel and the kick plate/grille using a screwdriver. Then, remove any dust and lint from the condenser using a soft bristle brush. For the position of the condenser, refer to the drawing.

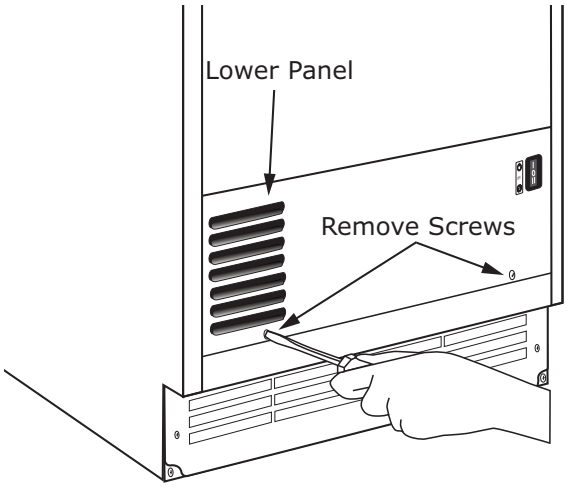

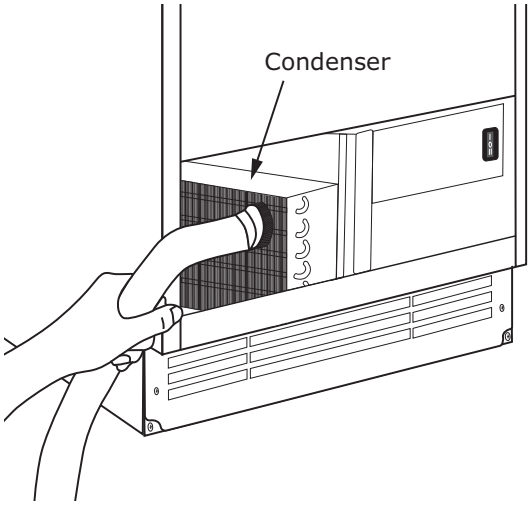

OBTAINING SERVICE

If Service is Required:

- If the product is within the first year warranty period, please go to marvelrefrigeration.com/request-product-service or call Marvel Customer Service at 616.754.5601 for directions on how to obtain warranty coverage in your area.
- If the product is outside the first year warranty period, Marvel Customer Service can provide recommendations of service centers in your area. A listing of authorized service centers is also available at www.marvelrefrigeration.com under the service and support section.
- In all correspondence regarding service, be sure to give the service number, serial number, and proof of purchase.
- Try to have information or description of nature of the problem, how long the appliance has been running, the room temperature, and any additional information that may be helpful in quickly solving the problem.
- The table below is provided for recording pertinent information regarding your product for future reference.

For Your Records	
Date of Purchase	
Dealer's name	
Dealer's Address	
Dealer's City	
Dealer's State	
Dealer's Zip Code	
Appliance Serial Number	
Appliance Service Number	
Date Warranty Card Sent (Must be within 10 days of purchase).	

Troubleshooting

CURRENT CONDITION	LAMP			CAUSES	ACTION
	● ICE	● NO WATER	● DRAIN		
Ice Making	L*			When the operation switch is switched to the ⏻ position	
Washing	B*			When the operation switch is changed to ⟳ the 'ICE' lamp blinks (every 1 second)	Drainage stops and goes out when the operation switch is switched to the 'off' position
Ice Full (Storage bin)	B			When the storage bin is full of ice (Ice Lamp on every 2 seconds, turns off for 1 second repeatedly)	When the ice full sensor detects the release temperature, the lamp turns off
Drain valve operating			L	When the drain valve opens	
Water supply error		B		When water level is not detected by the water level sensor due to no water supply for 2 minutes. (Er15)	Water supply pressure check Water level sensor check Start operation after action
Water drain error			B	If the lower limit water level sensor is not detected within 2 minutes as the drain valve operates (Er16)	Replacement of water level sensor Check drain valve operation Start operation after action
Evaporator temperature	B	B	B	When the Evaporator temperature is 32ºF or more after 30 minutes passed during the ice making (Er01)	Check refrigerant leakage Check sensor and attachment abnormality Resupply power after resolving cooling problem
Evaporator temperature error	B			When the Evaporator temperature is 32ºF or more after 10 minutes passed during the ice making (Er03)	
Ice full sensor error		B	B	When the ice full temperature sensor in the storage bin is disconnected or shorted	Check sensor and attachment abnormality Start operation after sensor part repair
Evaporator temperature sensor error	B	B		When the EVA temperature sensor at the evaporator outlet is disconnected or shorted	
Air temperature sensor	B		B	When the air temperature sensor in front of the condenser is disconnected or shorted	
Evaporator freezing	L	L	L	When the evaporator outlet temperature drops below the set temperature for 2 minutes while the ice maker is running (Er25)	Occurs when the ambient temperature is low Operate when the ambient temperature is over 50ºF

*L = Lamp On; B =Lamp Blinking

TROUBLESHOOTING

-The following maintenance schedule is guideline

-Maintenance and repair should be done more frequently according to water quality,
equipment usage environment and local hygiene regulations.

Maintenance Schedule		
Frequency	Area	Task
Daily	Scoop	Clean the scoop using a neutral cleaner. Rinse thoroughly after cleaning.
Monthly	External water filter	Make sure that the pressure is adequate and make changes if needed.
	Outside of the ice maker	Wipe down with clean, soft cloth. Use a damp cloth containing a neutral cleaner to wipe off oil or dirt build up. Clean any chlorine staining (rustcolored spots) using a non-abrasive cleanser.
	Storage Bin, Inner door, Ice outlet(Spout)	Wipe clean with clean cloth and warm water.
Every 6 Months	Icemaker andStorage Bin	Clean and disinfect according to the disinfection instructions given in the instruction manual.
	Evaporator Condensate Drain Pan and Gear Motor Drain Pan	Wipe down with clean cloth and warm water.
	Ice maker and reservoir	Always check that it is kept clean.
	Ice exit fixing seal bolt	Check for leaks around the seal bolt. Tighten if necessary and replace O-rings. Always replace the O-ring when loosening the seal bolt and tighten it again. If there isno O-ring, apply Loctite 243 or equivalent fixing agent so that it does not leak.
Yearly	Water supply valve and Drain valve	Close the shutoff valve to shut off the water supply line and drain the water. Close the shutoff valve to shut off the water supply line and drain the water.
	Water hose	Check the water hose and clean it if necessary.
	Condenser (air-cooled)	Inspect for cleaning. If necessary, clean with a brush or vacuum cleaner If the dust adhesion is severe, spray the pin cleaning agent, clean the dust, spray it with clean water, rinse and dry with air gun.
	Ice maker	Inspect for oil marks, loose components, tightening parts and wires.
	Upper bearing (Ice exit head)	Check that 0.02" round bar or pin gauge (or clearance gauge) is inserted into auger and bearing clearance, and replace all upper and lower bearings (ice exit head and lower housing)
	Mechanical seal	Check for leaks in the bottom housing, and if there is a leak, disassemble the auger to replace the mechanical seal. (Water with a lot of calcium will shorten the life of replacement parts.)
After 3 Years, then Yearly	Upper and lower bearings, Housing O-ring, Mechanical seals, Evaporator cylinder, Auger	Please chek. If the auger and bearing clearance exceeds the factory recommended value (0.02" or less), replace both the upper and lower bearings. If the contact surface of the mechanical seal is worn, cracked, or scratched, replace it.

WIRE DIAGRAM

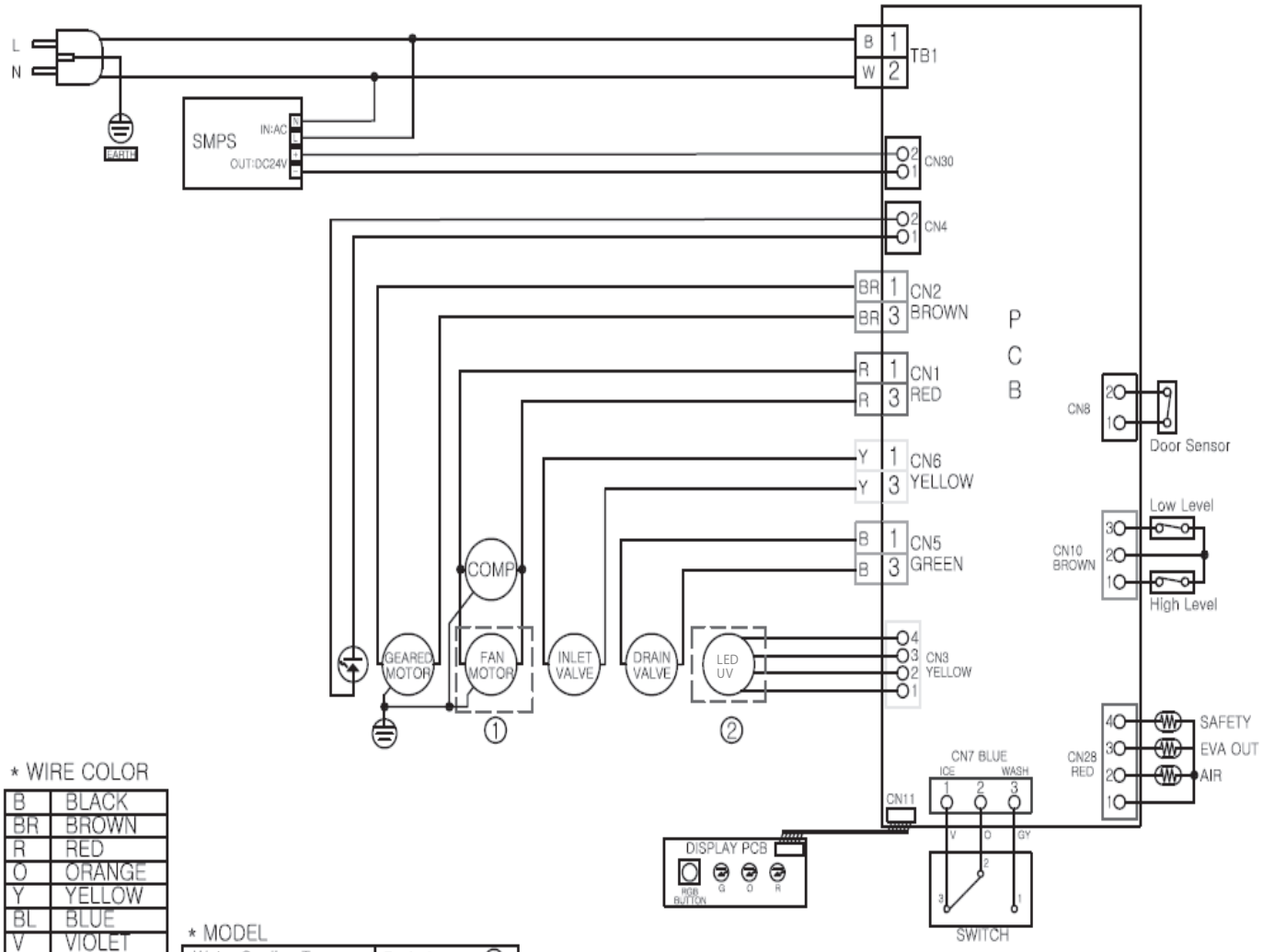

* WIRE COLOR

B	BLACK
BR	BROWN
R	RED
O	ORANGE
Y	YELLOW
BL	BLUE
V	VIOLET
GY	GRAY
W	WHITE
G	GREEN

* MODEL

Water Cooling Type	Exclude	①
Air Cooling Type	Include	①
Option		②

PRODUCT LIABILITY

Field service technicians are authorized to make an initial assessment in the event of reported damages. If there are any questions about the process involved, the technician should call Marvel for further explanation.

While inspecting for defects or installation issues, photos should be taken to document any damages or issues found.

During the assessment, if the service technician is able to find the source of the damage and it can be resolved by replacement of a part, the servicer is authorized to replace the part in question. The part that caused the damage must be returned to Marvel in its entirety. The part must be clearly labeled with the serial number of the unit it was removed from, the date, and the servicer who removed the part.

If the service technician determines the damage is the result of installation issues (water connection/drain, etc.), the consumer would be notified and the issues shall be resolved at the direction of the consumer.

If damage is evident and the service technician is unable to find the source, Marvel must be contacted at 616.754.5601 for further direction.

1260 E. Van Deinse St. • Greenville, MI 48838
T: 616.754.5601
Website: www.marvelrefrigeration.com

The original refrigeration experts since 1892.

PARTS LIST

MONP215-SS01A

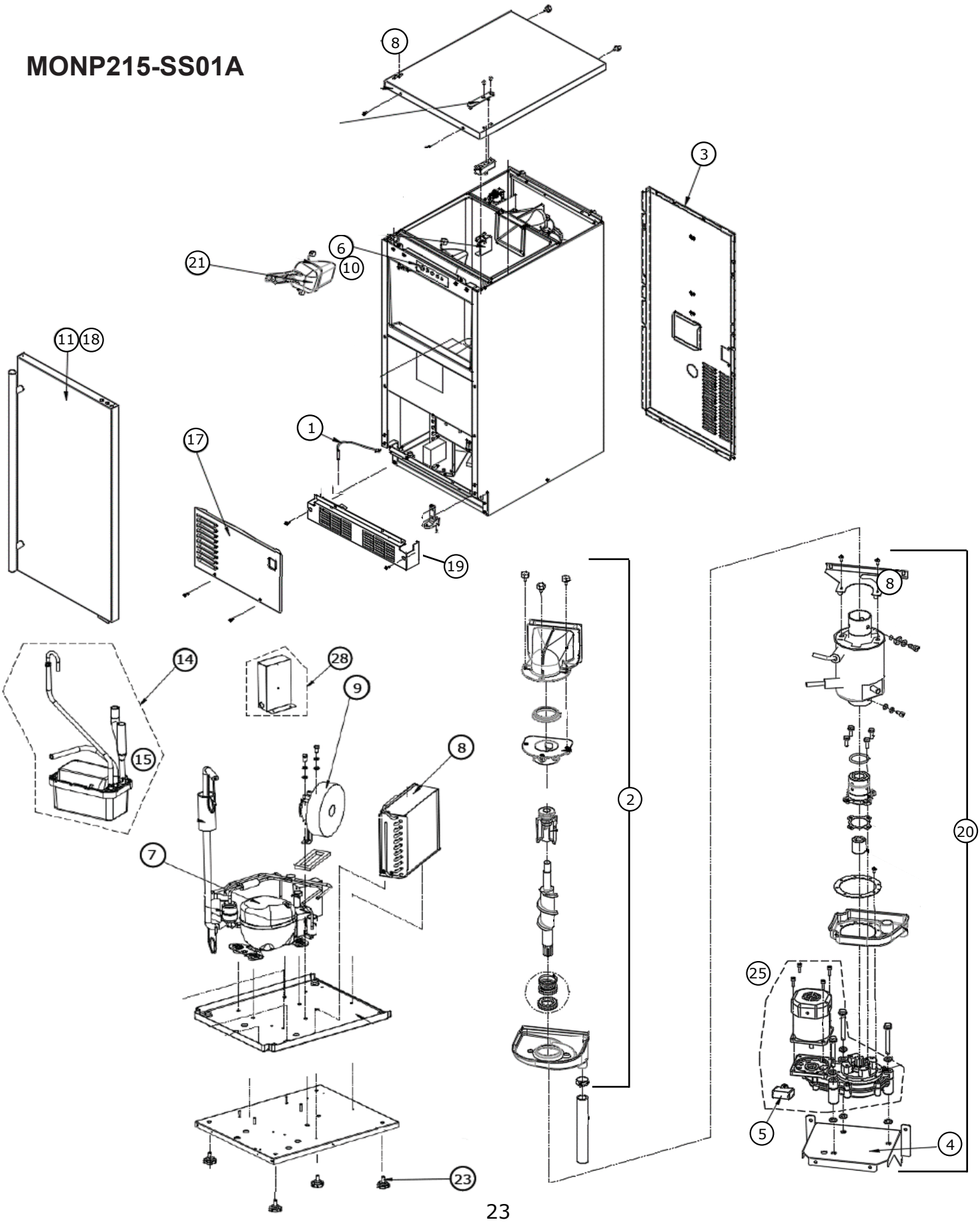

PARTS LIST

1	AIR SENSOR (BLUE)	80-55453-06
2	AUGER ASSEMBLY	80-55381-02
3	BACK PANEL (REAR COVER)	80-55342-09
4	BASE BRACKET(G-BOX)	80-55342-01
5	CAPACITOR KIT	80-55453-05
6	COMPLETE CONTROL KIT	80-55398-07
7	COMPRESSOR ASSEMBLY	80-55453-04
8	CONDENSER ASSEMBLY	80-55453-02
9	CONDENSER FAN ASSEMBLY	80-55453-03
10	DISPLAY ASSEMBLY	80-55398-06
11	DOOR ASSY, SOLID W/PIN HINGES	80-55453-10
12	DRAIN ASSEMBLY	80-55227-04
13	DRAIN KIT FOR PUMP	80-55227-07
14	DRAIN PUMP ASSEMBLY	80-55227-03
15	DRAIN PUMP ASSY(BLDC)	80-55227-01
16	EVAPORATOR ASSEMBLY	80-55381-01

17	FRONT LOW-COVER KIT	80-55453-12
18	GASKET, DOOR (SOLID)	80-55453-09
19	GRILLE ASSEMBLY (OUTDOOR)	80-55453-13
20	ICE MAKING UNIT (NUGGET)	80-55381-03
21	ICE SCOOP ASSEMBLY	80-55352-00
22	INLET SOCKET ASSEMBLY	80-55227-08
23	LEVELING LEGS	80-55342-02
24	MAGNET ASSEMBLY	80-55342-04
25	MAIN BOARD KIT	80-55398-09
26	MOTOR+GEAR BOX ASSY(1:200, 40W)	80-55381-04
27	POWER CORD ASSEMBLY*	80-55398-10
28	SMPS BOX KIT	80-55398-08
29	U-PIPE ASSEMBLY	80-55381-05
30	WATER INLET VALVE ASSEMBLY	80-55227-05
31	WATER RESERVOIR ASSEMBLY	80-55381-06
32	WATER VALVE ASSEMBLY	80-55227-06

* Not Pictured

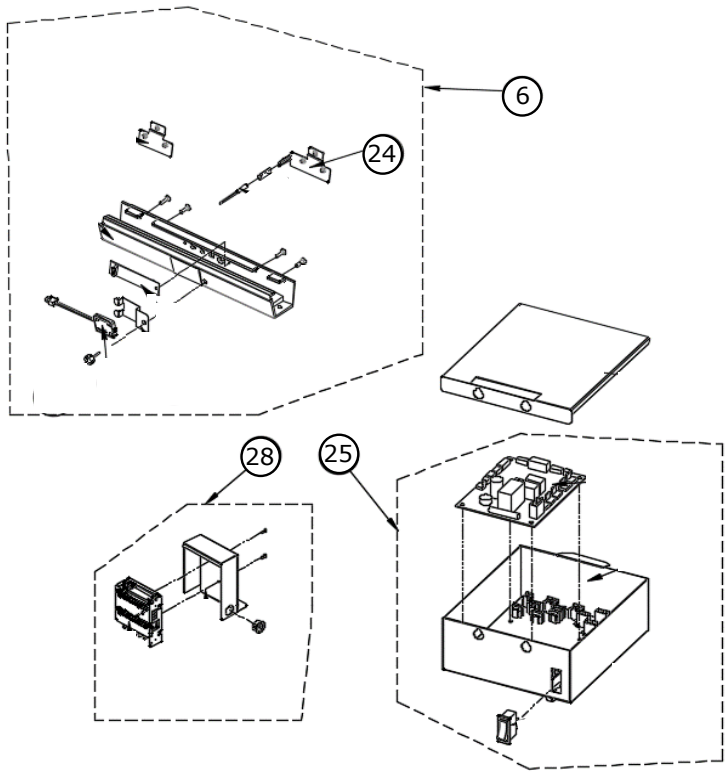

ORDERING REPLACEMENT PARTS

Parts may be ordered online at partsformarvel.com.

Or contact:

www.marvelrefrigeration.com (Servicers choose "Login" for service account).
Phone Number: (616) 754-5601

NOTE

Use only genuine Marvel replacement parts. The use of non-Marvel parts can reduce performance, damage the unit, and void the warranty.

Warranty parts will be shipped at no charge after Marvel confirms warranty status. Please provide the model, serial number, part number and part description. Some parts will require color or voltage information.

Marvel requires the return of original parts, we will inform you when the parts order is taken. This requirement will be noted on your packing list. A prepaid shipping label will be emailed to you. Please enclose a copy of the parts packing list and be sure the model and serial numbers are legible on the paperwork. Tag the part with the reported defect.

Customers and non-authorized servicers may order non-warranty parts at www.partsformarvel.com. Authorized servicers with a servicer login may order non-warranty parts at www.marvelrefrigeration.com.

R600A Specifications & Handling

⚠ WARNING

Flammability warnings for a pure-iso-butane refrigerant.







Gloves and Eye Protection must be used.



R-600a is considered non-toxic, but is flammable when mixed with air.

Keep a dry powder type fire extinguisher in the work area.



R-600a is heavier than air, do not allow any leakage/migration to low areas such as basements and stairs.

Never use a torch on a fully charged refrigeration system.

Never substitute Marvel OEM replacement parts or methods of construction.

R-600a must be stored and transported in approved containers.

R600A SPECIFICATIONS

⚠ WARNING

Only skilled and well trained service technicians permitted to service R-600a equipped products.

All tools and equipment must be approved for use with R-600a refrigerant.

Local, state and federal laws, standards must be observed along with proper certification and licensing.

Ventilation is required during servicing.

No conversions to R-600a from any other refrigerants. OEM R-600a equipped unit only.

Service area must be free of ignition sources.

No smoking is allowed in the service area.

All replacement electrical components must be OEM and installed properly (sealed and covered).

If the evaporator is cold prior to service, it must be thawed prior to service.

When using a vacuum pump, start pump before opening refrigeration system.

Vacuum pump and recovery equipment should be at least 10 feet from the work area.

It is recommended that a simple LPG gas detector is on site during service.

Ensure that all R-600a is removed from the system prior to brazing any part of the sealed system.

Only a clean, dry leak free system should be charged with R-600a.

R-600A Specifications/Labeling

R-600a equipped products are labeled (both the unit and the compressor).

R-600a is colorless and odorless.

R-600a is considered non-toxic, but is flammable when mixed with air.

Do not remove or alter any R-600a labeling on the product.

Use only a refrigerant grade R-600a from a properly labeled container.

Recovering/Reclaiming R-600A

(R-600a has been exempted from recovery/reclaiming requirements by the US EPA)

Recovery/Reclaiming equipment must be approved for use with R-600a.

Ensure the evaporator is at room temperature prior to recovery/reclaiming R-600a.

Use a common piercing pliers or piercing valve to remove R-600a from the compressor process tube. (Note: Piercing devices must not be left on the system and must be replaced with a Schrader type valve).

R600A SPECIFICATIONS

Evacuate/reclaim via the piecing pliers to ensure the system is empty of R-600a before any system work is performed.



The recovery cylinder must be evacuated (no air inside) prior to accepting R-600a.

The recovery cylinder must not be filled more than 45% safe fill level and refrigerants must not be mixed.

The recovery cylinder must be clearly marked with R600a and Flammable Warning labels.

Ensure proper ventilation during recovery/reclaiming of R600a.

Start vacuum pump/recovery pump prior to piercing the compressor process tube.

Follow recovery/reclaim OEM instructions for the specific equipment used.

System Repair

Ensure no residual R-600a refrigerant is left within the system prior to repair (simple venting is not sufficient).

Evacuate and charge with dry nitrogen for leak checks.

Repair leaks or replace system parts as required.

When re-brazing, the system must be purged with dry nitrogen and at least one access point open to the atmosphere.

When re-brazing, proper ventilation is required along with constant monitoring for the presence of R600a refrigerant.

The filter dryer must be replaced any time the sealed system is serviced.

No system should be open to the atmosphere for longer than 15 minutes to avoid moisture migration into the system components.

Leak Detection

After removal of the R-600a, the unit can be charged with dry nitrogen or helium.

Electronic leak detection or soap solution can be used tocheck for nitrogen/helium leaks.



Never use a halide torch or lighted match to check the system for leaks at any time.

The high side of the refrigeration system (compressor discharge to outlet of drier) must be leak tested with the compressor running.

The low side of the refrigeration system (evaporator, compressor and suction line) must be leak tested with the compressor off (equalized pressure).

Recharging

No air is ever to be allowed inside the refrigeration system (R-600a refrigerant or dry nitrogen only).

Never use a torch on a fully charged refrigeration system.

Install a Schrader Type access port on the compressor process stub.



Evacuate the system to 100 microns prior to charging.

Weigh in the R-600a charge using a refrigerant scale (run compressor an extra two minutes to clear the charging hoses).

Seal the Schrader Type access port, a proper cap and seal must be used to close the system.



Summary

Safely handling R-600a requires proper procedures and training.

R-600a approved service tools must be used.

R-600a labeling must not be removed or altered.

Proper ventilation during service is required.

Never apply a torch to a charged R-600a refrigeration system.

Use OEM replacement service parts and do not alter the construction of the unit.

COMPRESSOR SPECIFICATIONS

⚠ WARNING

Electrocution can cause death or serious injury. Burns from hot or cold surfaces can cause serious injury. Take precautions when servicing this unit.

Disconnect the power source.

Do not stand in standing water when working around electrical appliances.

Make sure the surfaces you touch are not hot or frozen.

Check Terminal Pins

To measure the start winding resistance, measure across the C and S pins.

To measure the run winding resistance, measure across the C and R pins.

Also check S to R and you should get the sum of the run and start windings.

To ensure the windings are not shorted, check the S and R to ground.

	HYS67MGU72a
Refrigerant	R600A
Voltage	115-127 VAC
Frequency	60 Hz
Run Cap	8μF/450 VAC
Start Winding	8 Ohm at 77°F
Run Winding	7.1 Ohm at 77°F
LRA	11 A
FLA	7.6 A
Starting Device	QP2-4R7
Overload	DRB26p61A1

*All resistance readings are ± 10%.

Marvel Refrigeration (Marvel) Limited Warranty

ONE YEAR LIMITED PARTS & LABOR WARRANTY

For one year from the date of original purchase, this warranty covers all parts and labor to repair or replace any part of the product that proves to be defective in materials or workmanship. For products installed and used for normal residential use, material cosmetic defects are included in this warranty, with coverage limited to 60 days from the date of original purchase. All service provided by Marvel under the above warranty must be performed by a Marvel factory authorized servicer, unless otherwise specified by Marvel. Service provided during normal business hours.

TWO YEAR LIMITED PARTS & LABOR WARRANTY (MARVEL PROFESSIONAL PRODUCTS)

For two years from the date of original purchase, this warranty covers all parts and labor to repair or replace any part of the product that proves to be defective in materials or workmanship. For products installed and used for normal residential use, material cosmetic defects are included in this warranty, with coverage limited to 60 days from the date of original purchase. All service provided by Marvel under the above warranty must be performed by a Marvel factory authorized servicer, unless otherwise specified by Marvel. Service provided during normal business hours.

AVAILABLE THIRD YEAR LIMITED WARRANTY (MARVEL PROFESSIONAL PRODUCTS)

For designated Marvel Professional product, Marvel offers a one year extension of the two year warranty coverage from the date of purchase, free of charge. To take advantage of this third year warranty, you must register your product with Marvel within 60 days from the date of purchase at marvelrefrigeration.com and provide proof of purchase.

LIMITED FIVE YEAR SEALED SYSTEM WARRANTY

For five years from the date of original purchase, Marvel will repair or replace the following parts, labor not included, that prove to be defective in materials or workmanship: compressor, condenser, evaporator, drier, and all connecting tubing. All service provided by Marvel under the above warranty must be performed by a Marvel factory authorized servicer, unless otherwise specified by Marvel. Service provided during normal business hours.

WARRANTY TERMS

These warranties apply only to products installed in any one of the fifty states of the United States, the District of Columbia, or the ten provinces of Canada. The warranties do not cover any parts or labor to correct any defect caused by negligence, accident or improper use, maintenance, instal-lation, service, repair, acts of God, fire, flood or other natural disasters. The product must be installed, operated, and maintained in accordance with the Marvel User Guide.

The remedies described above for each warranty are the only ones that Marvel will provide, either under these warranties or under any warranty arising by operation of law. Marvel will not be responsible for any consequential or incidental damages arising from the breach of these warranties or any other warranty, whether express, implied, or statutory. Some states do not allow the exclusion or limitation of incidental or consequential damages, so the above limitation or exclusion may not apply to you. These warranties give you specific legal rights, and you may also have other rights which vary from state to state.

Any warranty that may be implied in connection with your purchase or use of the product, including any warranty of merchantability or any warranty fit for a particular purpose is limited to the duration of these warranties, and only extends to five years in duration for the parts described in the section related to the five year limited warranty above. Some states do not allow limitations on how long an implied warranty lasts, so the above limitations may not apply to you.

- The warranties only apply to the original purchaser and are non-transferable.
- These warranties cover products installed and used for normal residential use only.
- The warranties apply to units operated outside only if designed for outdoor use by model and serial number.
- Replacement water filters, light bulbs, and other consumable parts are not covered by these warranties.
- The start of Marvel's obligation is limited to four years after the shipment date from Marvel.
- In-home instruction on how to use your product is not covered by these warranties.
- Food, beverage, and medicine loss are not covered by these warranties.
- If the product is located in an area where Marvel factory authorized service is not available, you may be responsible for a trip charge or you may be required to bring the product to a Marvel factory authorized service location at your own cost and expense.
- Units purchased after use as floor displays, and/or certified reconditioned units, are covered by the limited one year warranty only and no coverage is provided for cosmetic defects.
- Signal issues related to Wi-Fi connectivity are not covered by these warranties.

For parts and service assistance, or to find Marvel factory authorized service near you, contact Marvel Refrigeration:
marvelrefrigeration.com • techsupport@marvelrefrigeration.com • 616.754.5601
1260 E. Van Deinse St. Greenville, MI 48838



www.marvelrefrigeration.com

Marvel Refrigeration
1260 E. Van Deinse St.
Greenville MI 48838

616.754.5601

All specifications and product designs subject to change without notice. Such revisions do not entitle the buyer to corresponding changes, improvements, additions, replacements or compensation for previously purchased products.