



Register your new Bosch now:
www.bosch-home.com/welcome



Fridge-freezer
KDN..

BOSCH

en Instructions for installation and use

en Contents

Safety precautions 3
About these instructions 3
Risk of explosion 3
Fire risk 3
Risk of electric shock 3
Risk of skin injuries from freezing temperatures 3
Risk of injury 3
Dangers from refrigerants 3
Avoiding risks to children and other at-risk persons . . . 3
Risk of suffocation 4
Appliance damage 4
Weight 4

Intended use 4

Environmental protection 4
Packing 4
End-of-life appliances 4

Setting up and connecting the appliance 5
Specifications supplied 5
Technical data 5
Installing the appliance 5
Saving energy 6
Before using the appliance for the first time 7
Electrical connections 7

Getting to know the appliance 8
Appliance 8
Operating controls 9
Freezer compartment temperature control 9
Fittings 9

Operating the appliance 11
Switching on the appliance 11
Switching off and shutting down the appliance 11
Setting the temperature 11
Super cooling 11

Alarm 11
Door alarm 11

Fridge compartment 12
When placing food in the fridge, follow these guidelines 12
Pay attention to the temerature zones in the fridge compartment 12
Vegetable container with humidity regulator 12
Fruit container 12

Freezer compartment 13
Maximum freezing capacity 13
Fully utilising the freezing capacity 13
Purchasing frozen foods 13
When arranging the food, note the following 13
Freezing fresh food 13
Defrosting frozen food 14

Defrosting 14
Fridge compartment 14
Freezer compartment 14

Cleaning 14
Cleaning the fittings 14

Smells 14

Lightning 15

Noises 15
Normal noises 15
Preventing noises 15

What to do if there is a fault 16

After-sales Service 17
Repairs and advice on faults 17
Warranty 17

Safety precautions

This appliance corresponds to the relevant safety requirements for electrical appliances and is fitted with interference suppression circuits.

The refrigeration circuit has been checked for leak tightness.

About these instructions

- Carefully read through and follow the instructions for installation and use. They contain im-portant information on setting up, using and maintaining the appliance.
- The manufacturer is not liable for any damage caused by failure to follow the guidance and warnings contained in the instructions for installation and use.
- Retain all documents for later use and for subsequent owners.

Risk of explosion

- Never use electrical appliances inside the appliance (e.g. heaters, electric ice-makers).
- Do not store products with flammable propellant gases (e.g. spray cans) or explosive substances inside the appliance.
- High-proof alcohol must always be tightly sealed and stored in an upright position.

Fire risk

- Never place candles on top of or inside the appliance, e.g. during a power cut.
- Never place any other electrical appliance (e.g. TV, microwave oven, night lamp) on top of the appliance.
- Never connect the appliance to damaged socked or when power cord/plug got damaged.

Risk of electric shock

Incorrect installation or repairs may result in significant risks to the user.

- If the power cord is damaged: immediately disconnect the appliance from the mains.
- Only have repairs carried out by the manufacturer or after-sales service.
- Make sure for proper grounding. Electrical home installation shall comply with country specific legal requirements.
- Use only genuine replacement parts from the manufacturer.
  Only such parts are guaranteed by the manufacturer to meet the safety requirements.
- Any mains power lead extension may only be obtained from After-sales Service.
- When positioning the appliance, ensure the supply cord is not trapped or damaged.
- Do not locate multiple portable socket-outlets or portable power supplies at the rear of the appliance

Risk of skin injuries from freezing temperatures

- Never put frozen food in your mouth immediately after it has been taken out of the freezer compartment.
- Avoid prolonged skin contact with frozen food, ice or the piping in the freezer compartment.

Risk of injury

Containers (e.g. bottles or cans) holding carbonated drinks can burst.

- Do not keep any containers holding carbonated drinks in the freezer compartment.
- Do not keep glass bottles in the freezer for too long or they will freeze and burst.
- Do not keep any full filled bottle in the freezer compartment.

Dangers from refrigerants

The appliance's refrigeration system piping contains a small quantity of the environmentally-friendly but flammable refrigerant R600a. It is not harmful to the ozone layer and does not contribute to the greenhouse effect. If the refrigerant escapes, it can cause injury to the eyes or ignite.

- Do not damage the pipes.

If the pipes are damaged:

- Keep naked flames or sources of ignition away from the appliance.
- Ventilate the room.
- Switch off the appliance and unplug it from the mains.
- Call After-sales Service.

Avoiding risks to children and other at-risk persons

Persons at risk are:

- Children
- Persons whose powers of perception are physically or psychologically limited
- Persons who do not have sufficient knowledge about how to use the appliance safely

Action required:
- Make sure that children and other at-risk persons have understood the dangers.
- A person responsible for safety must supervise or instruct children and other at-risk persons when they are using the appliance.
- Do not allow children under 8 years old to use the appliance.
- Supervise children when cleaning and servicing.
- Never let children play with the appliance.

Risk of suffocation

- Appliances with a door lock: Keep the key out of the reach of children.
- Do not give packing or parts of it to children.

Appliance damage

To avoid damage to the appliance:
- Do not stand or support your weight on the base, drawers or doors.
- Keep plastic parts and door seals free of oil and grease.
- When unplugging the mains plug, always take hold of the plug itself, never pull on the connecting lead.
- Do not use any unauthorised plastic base stand below appliance.

Weight

When setting up and moving the appliance, bear in mind that it can be very heavy.
⟶ *"Installation site" on page 5*

Intended use

Only use this appliance
- for keeping food cool or freezing it or for making ice
- for domestic purposes in a private household
- in accordance with these instructions for installation and use

This appliance is intended for use up to a maximum height of 2000 metres above sea level.

Environmental protection

Packing

All the materials are environmentally friendly and can be recycled.

- Dispose of the packing in an environmentally responsible manner.
- Contact your appliance retailer or your local authority for information about the available disposal methods and sites.

End-of-life appliances

Valuable raw materials can be recovered by environmentally-friendly disposal.

⚠ Warning
Children can become trapped inside the appliance and suffocate!
- To make it more difficult for children to climb into the appliance, the shelves and containers should be left in place inside the appliance.
- Keep children away from the disused appliance.

Caution!
Risk of refrigerant and harmful gases escaping.
Do not damage the refrigeration circuit pipes or the insulation.

1. Unplug the mains plug.
2. Cut through the mains power cord.
3. Have the appliance properly disposed of.

Disposal of your old appliance (as per e-waste Rules)



1. When this crossed out wheeled bin symbol is depicted on the product and its operator's manual, it means the product is covered by the e-waste Management and Handling Rules 2016, and are meant to be recycled, dismantled, refurbished or disposed off by properly qualified personnel and technology.

2. Dos

a. The product is required to be handed over only to the authorized recycler for disposal:
www.bosch-home.com/in/about-bosch/responsibility.html
See also:
Contact No: 180042535287 (toll-free)
E-mail: recycle@ewasteindia.com
Online website: www.ewasteindia.com

b. Keep the product in isolated area, after it becomes non-functional/un-repairable so as to prevent its accidental breakage.

Don't

a. The product should not be opened by the user himself/herself, but only by authorized service personnel.

b. The product is not meant for re-sale to any unauthorized agencies/scrap dealer/kabariwalah.

c. The product is not meant for mixing into household waste stream.

d) Do not keep any replaced spare part(s) from the product in exposed area.

3. Any disposal through unauthorized agencies/person will attract action under Environment (Protection) Act 1986.

Note: This product doesn´t use any hazardous substances as specified in the E-waste (Management) Rules 2016.

Setting up and connecting the appliance

Specifications supplied

After unpacking the appliance, check all parts for transport damage.

If you find any defects, contact the retailer from whom you purchased the appliance or our After-sales Service
⟶ *"After-sales Service" on page 17*

The appliance supplied consists of the following components:

- Free-standing appliance
- Fittings (variable according to model)
- Bag of assembly materials
- Instructions for installation and use
- Service record
- Guarantee slip
- Information on energy consumption and noise

Technical data

Details of refrigerant, usable capacity and other technical specifications can be found on the rating plate.
⟶ *"Getting to know the appliance" on page 8*

Installing the appliance

Installation site

The more refrigerant an appliance contains, the larger the room must be in which it stands. If there is a leak and the room is too small, a flammable gas-air mixture may form.

The room must be at least 1 m³ in size for each 8 g of refrigerant. The quantity of refrigerant in your appliance is stated on the rating plate inside the appliance.
⟶ *"Getting to know the appliance" on page 8*

Set up the appliance with a minimum clearance of 35 mm from walls and adjacent appliances.

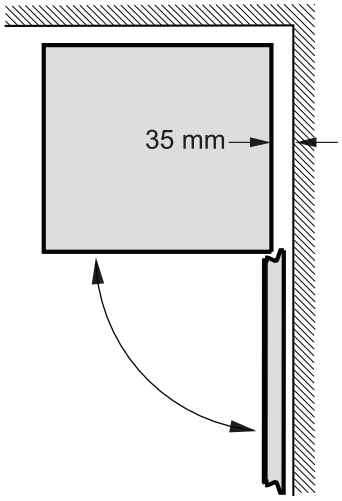

The appliance can weigh up to 80 kg depending on model.

Permissible room temperature

The permissible room temperature depends on the climate class of the appliance.

Details of the climate class can be found on the rating plate.
⟶ *"Getting to know the appliance" on page 8*

Climate class	Permissible room temperature
SN	+10 °C ... 32 °C
N	+16 °C ... 32 °C
ST	+16 °C ... 38 °C
T	+16 °C ... 43 °C

The appliance is fully functional within the room temperature limits of the specified climate class.

If an appliance rated as climate class SN is operated at lower temperatures, the appliance will not suffer damage at room temperatures down to +5 °C.

Levelling the appliance

1. Move the appliance into its intended position and level it. The appliance should stand firmly and be level.
2. Use the two adjustable feet at the front of the appliance to compensate for any unevenness of the floor.

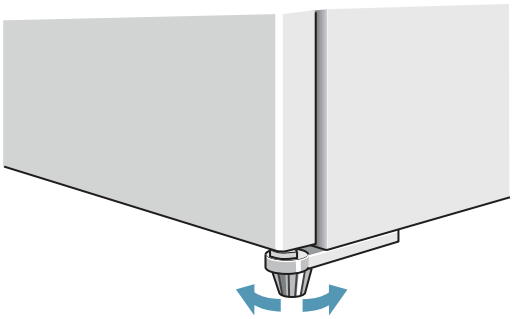

Note: The appliance should be exactly vertical. level the appliance with the aid of a spirit level.

Saving energy

Your appliance will use less electricity if you follow the guidance notes below.

Note: The arrangement of the fittings has no effect on the energy consumption of the appliance.

Installing the appliance	
Protect the appliance from direct sunlight.	In lower ambient temperatures, the refrigeration system has to cut in less often and so uses less electricity.
Position the appliance with as much clearance as possible from radiators, cookers and other sources of heat: At least 3 cm from electric or gas cookers At least 30 cm from oil or solid-fuel stoves **Note: .** If that is not possible, fit an insulation board between the appliance and the heat source.	
Select an installation site with a room temperature of approx. 20 °C.	
Caution! **Risk of skin burns.** Some parts of the appliance become hot when in operation. Touching those parts can cause skin burns.	The air at the back of the appliance does not heat up as much. The appliance uses less power if the warm air can dissipate.
Never cover over or block the air vents.	
Ventilate the room every day.	

Using the appliance	
Only keep the appliance door open for a short time.	The air inside the appliance does not heat up as much. The refrigeration system has to cut in less often and so uses less electricity.
Carry food that you buy in a coolbag and put it in the appliance as soon as possible.	
Allow hot food and drinks to cool before placing them in the appliance.	
Place frozen food in the fridge compartment to defrost and so utilise the low temperature of the frozen food.	
Always leave some space between the food and the rear panel of the appliance.	The air can then circulate and the air humidity remains constant. The refrigeration system has to cut in less often and so uses less electricity.
Pack food in air-tight containers.	
Vacuum-clean the back of the appliance once a year.	The air at the back of the appliance does not heat up as much. The appliance uses less power if the warm air can dissipate.
Never cover over or block the air vents.	

Before using the appliance for the first time

1. Take out the information material and remove the adhesive tape and protective foil.
2. Clean the appliance.
   ⟶ *"Cleaning" on page 14*

Electrical connections

Caution!
Do not connect the appliance to electronic energy-saving power sockets.

Note: You can connect the appliance to phase or sine-wave commutated power inverters.
Phase-commutated inverters are used with photovoltaic systems that have a direct connection to the mains power grid. With standalone set-ups, you must use sine-wave commutated power inverters. Standalone set-ups, e.g. on ships or in mountain huts, do not have a direct connection to the mains power grid.

1. After setting up the appliance wait at least 1 hour before connecting it in order to avoid damage to the compressor.
2. Connect the appliance to correctly installed power outlet socket.
   The power outlet socket must match the following specifications:

Power outlet socket with	220V ... 240 V
Protective earth	50 Hz
Fuse	10A ... 16 A

   Outside Europe: check whether the specified power rating of the appliance matches your power supply. Details of the appliance rating can be found on the rating plate.
   ⟶ *"Getting to know the appliance" on page 8*
3. Connect the appliance to a power socket close to the appliance.
   The power outlet socket must also remain easily accessible after the appliance has been installed.

Getting to know the appliance

Appliance

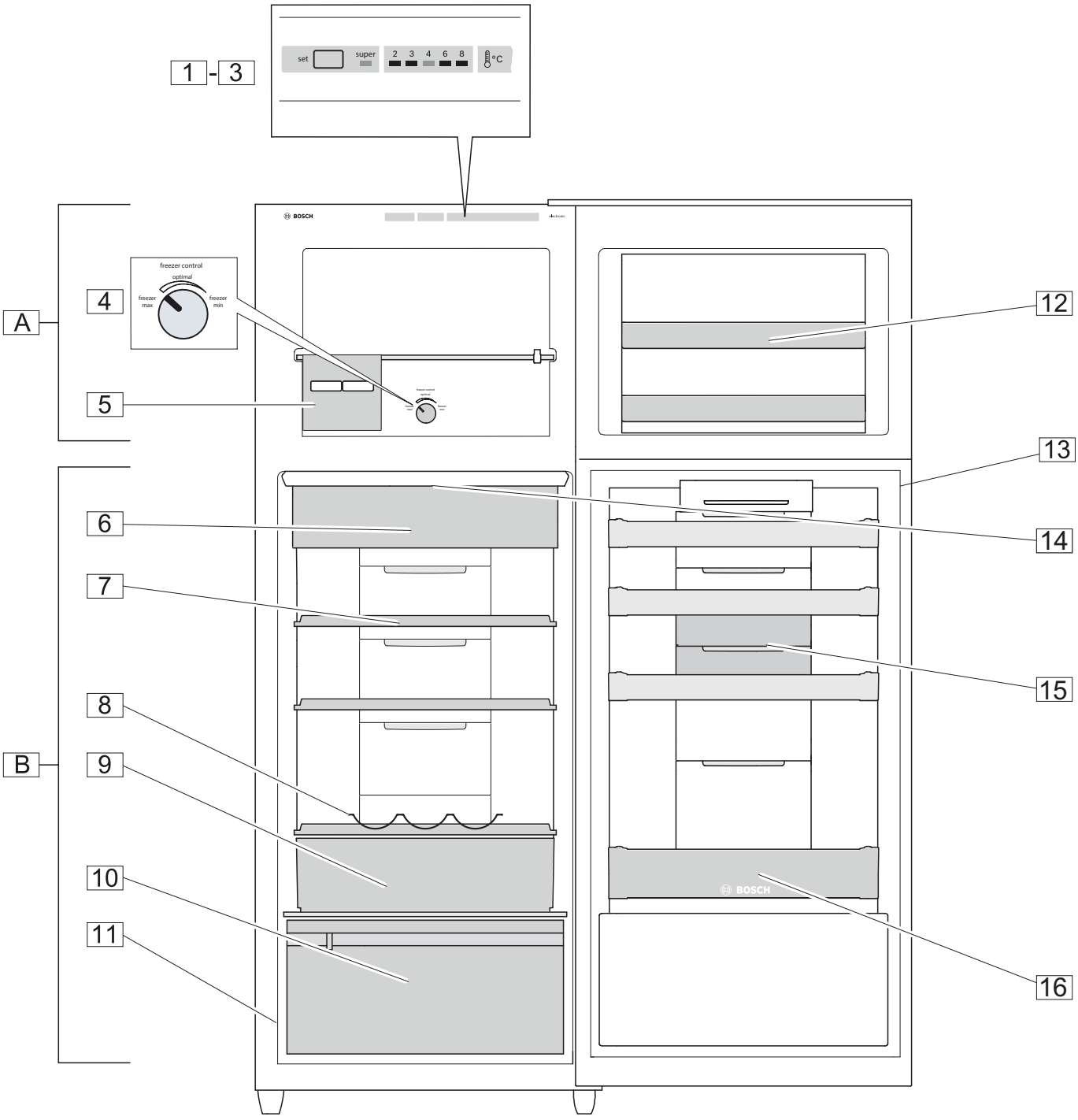

* Not available on all models.

A		Freezer compartment
B		Fridge compartment
1	3	Operating controls
4		Freezer compartment temperature control
5		Ice maker
6		Chiller box
7		Removable shelves
8		Bottle tray
9	*	Fruit container
10		Vegetable container with humidity regulator
11		Identification plate (rear of the appliance)
12		Freezer compartment shelves
13		Door lock
14		Lighting
15		Shelf
16		Tray for large bottles

Operating controls

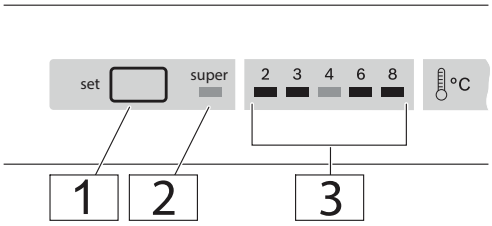

1 **Fridge compartment temperature setting button.**
Sets the temperature of the fridge compartment.

2 **Super cooling display.**
Shows whether super cooling is on or off.

3 **Fridge compartment temperature display.**
Shows the set temperature in °C.

Freezer compartment temperature control

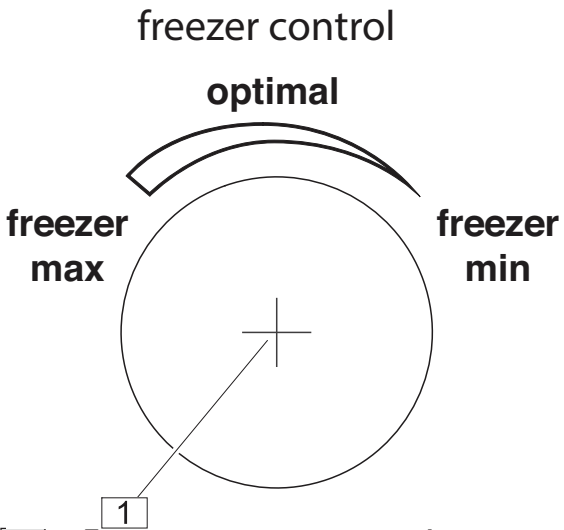

1 **Freezer compartment control.**
Sets the temperature of the freezer compartment (**freezer max** = coldest / **freezer min** = cold).

Fittings

(Not available on all models)

Door lock



To lock and unlock the door, push the key into the lock, then turn the key while keeping it held down.

Chiller box

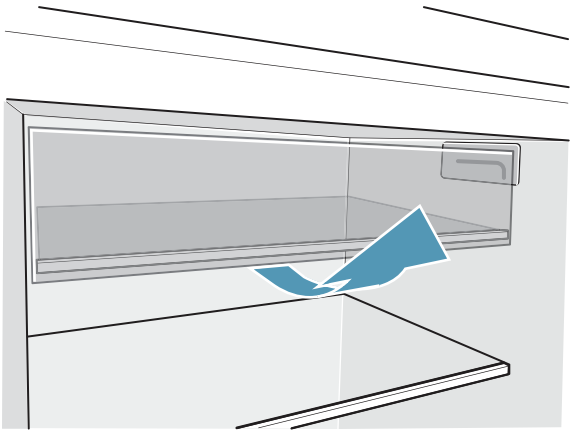

The temperature in the Chiller box can fall below 0 °C. Ideal for storing fish, meat and cold cuts.
Not suitable for salads, vegetables and foods sensitive to low temperatures.

Shelves



You can vary the position of the shelves:

- Pull the shelf outwards and remove it.

Containers

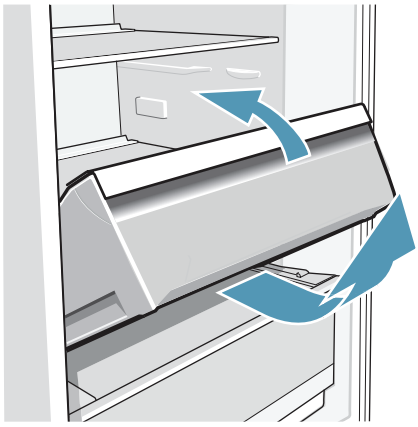

You can take the containers out:

- Pull the container out as far as the stop, lift it at the front and remove it.

Trays

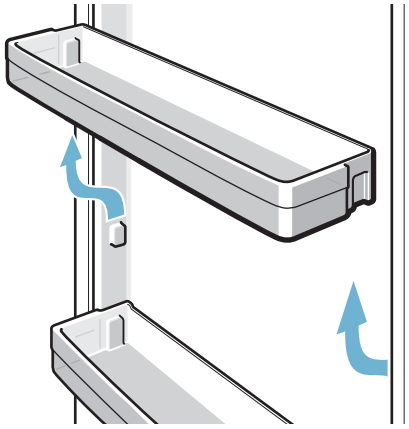

You can take the trays out:

- Lift the tray upwards and remove it.

Bottle holder

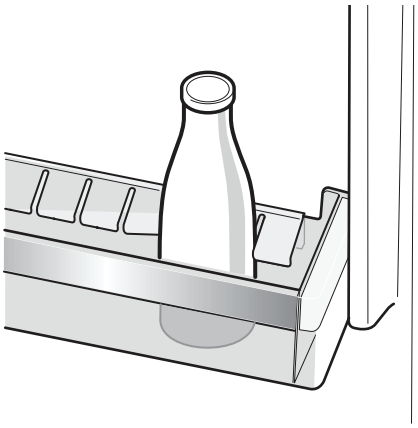

When you open and close the door:

- The bottle holder prevents bottles tipping over.

Ice maker

You can make ice cubes:

1. Take out the ice-cube tray, fill it 3/4 full with tap water and replace it.
2. When the ice cubes are frozen, turn the knobs on the ice-cube trays clockwise several turns then release them. The ice cubes will come out of the tray and fall into the ice-cube container.
3. Take the ice cubes out of the ice-cube container.

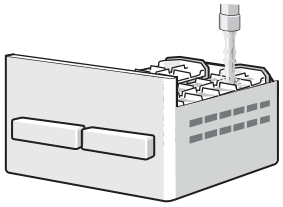

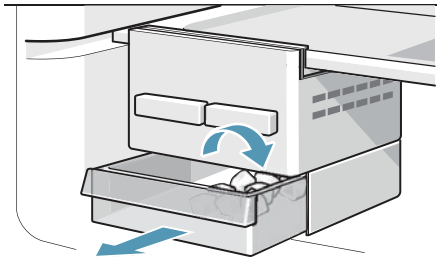

Ice block

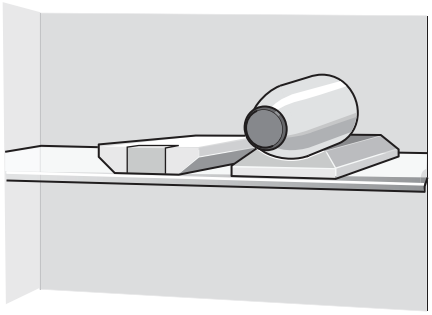

If there is a power failure or a fault:

- The ice block will slow down the rate at which the stored frozen food warms up.

Note: Placing the ice block on the food in the upper door tray or on the food in the freezer compartment will keep the food fresher for longer.

You can take out the ice block to temporarily keep food cool in a coolbag, for instance.

Operating the appliance

Switching on the appliance

1. Plug the appliance mains plug into the mains outlet socket.
   The appliance starts refrigerating and the light switches on when the door is opened.
2. Set the desired temperatures for the fridge and freezer compartments.
   ⟶ *"Setting the temperature" on page 11*

Notes on using the appliance

- After switching on the appliance, it may be several hours before the set temperatures are reached. Do not place any food in the appliance before it reaches the selected temperature.
- Thanks to the fully automatic NoFrost system, the freezer compartment remains free of ice. Defrosting is not required.
- The front side of the housing is slightly heated. This prevents condensation from forming around the door seal.
- If you cannot open the freezer compartment door again immediately after closing it, wait a moment for the low pressure created to equalise.

Switching off and shutting down the appliance

Switch off the appliance.

- Unplug the appliance from the mains or switch off the circuit-breaker.
  The refrigeration system and lights switch off.

Putting the appliance out of service

If you do not use the appliance for long periods:
1. Unplug the appliance from the mains or switch off the circuit-breaker.
   The refrigeration system and lights switch off.
2. Clean the appliance.
3. Leave the appliance doors open.

Setting the temperature

Recommended temperature

Fridge compartment: + 4 °C

Freezer compartment: We recommend a medium setting.

- Set the temperature in the freezer compartment lower if the room temperature drops.

Fridge compartment

The current fridge compartment temperature setting is indicated on the display.

- Press the fridge compartment temperature setting button to set the desired temperature.
  The LED of the selected temperature lights up.

Freezer compartment

- Turn the control knob until the desired setting is obtained.

OK sticker

(Not available on all models)

You can use the **OK** sticker to check whether the temperature in the fridge compartment has reached +4 °C or below.

If the sticker does not show **OK**, gradually reduce temperature a step at a time.

After the appliance is first switched on it can take up to 12 hours to reach the set temperature.

Setting the correct temperature



Super cooling

When super cooling is on, the fridge compartment cools to the lowest temperature possible.

Switch on super cooling, for example
- before putting a large amount of food in the fridge compartment.
- to cool drinks quickly.

Note: When super cooling is switched on, the appliance may make more noise.

Once the lowest possible temperature has been reached in the fridge compartment and the freezer compartment – but in any case after no more than 6 hours – the appliance switches back to the last selected setting temperature before super operation.

To switch super cooling on/off:
- Press and hold the fridge compartment temperature setting button until the super cooling display lights up.

Alarm

Door alarm

If one of the appliance doors is open for longer than two minutes, the door alarm switches on (continuous sound).
- Close the door or press the fridge compartment temperature setting button.
  The audible warning signal switches off.

Fridge compartment

The fridge compartment is the perfect place for keeping meat, cold cuts, fish, dairy products, eggs, ready meals, bread and pastries.

The temperature of the fridge compartment can be set between +2 °C and +8 °C.

By storing food in the fridge you can keep even highly perishable items for short to medium-length periods. The lower the set temperature, the more slowly enzymatic and chemical processes and decomposition by micro-organisms take place. A temperature of +4 °C or below ensures food is kept as fresh and safe to eat as possible.

When placing food in the fridge, follow these guidelines:

- Keep fresh, untouched food in the fridge. In that way it will keep longer and stay fresher.
- In the case of ready-made products and packaged foods and liquids, pay attention to the manufacturer's specified best-before or use-by date.
- In order to maintain flavour, colour and freshness, keep food well packed or covered over. That also prevents flavours from mixing and the plastic parts from becoming discoloured in the fridge compartment.
- Allow warm food and beverages to cool before putting them into the appliance.

Notes

- Keep food from coming into contact with the rear panel. Otherwise, the air circulation will be impaired.
- Food or packaging could also become frozen to the rear panel.

Pay attention to the temperature zones in the fridge compartment

The air circulation produces different temperature zones in the fridge compartment.

The coldest zone

The coldest zone is in the chiller box.

Note: Use the coldest zone to keep temperature-sensitive foods such as fish, cold cuts and fresh meat.

The warmest zone

The warmest zone is on the shelf under the chiller box.

Note: Keep items such as hard cheese and butter in the warmest zone. That will allow the cheese to continue developing its flavour and the butter will remain spreadable.

Vegetable container with humidity regulator

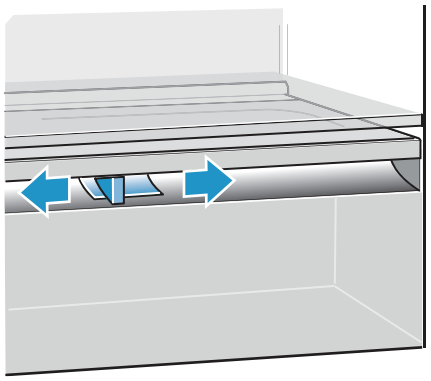

To create the ideal storage temperature for fruit and vegetables, you can adjust the air humidity in the vegetable container as follows according to the amount stored:

- Small quantities of fruit and vegetables – high air humidity
- Large quantities of fruit and vegetables – low air humidity

Fruit container

(Not available on all models)

Additional storage container for fruit.

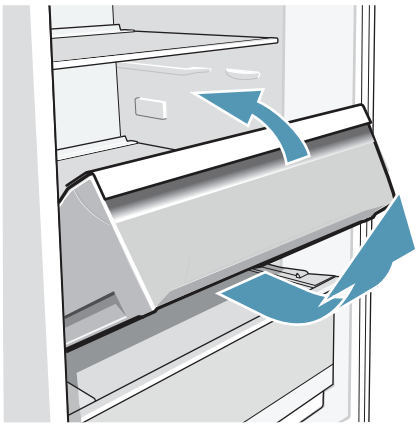

Note:
Condensation may form in the vegetable container depending on the quantity and type of vegetables stored. Wipe away the condensation using a dry cloth and adjust the air humidity accordingly by means of the humidity regulator.

Freezer compartment

The freezer compartment is suitable for:
- Storing frozen food
- Making ice cubes
- Freezing food

The temperature is dependent on how long the appliance has been in operation, the fridge compartment temperature and the ambient temperature.

By keeping food in the freezer you can store perishable foods for a long period with almost no noticeable loss in quality because the low temperatures considerably slow down or stop the process of decomposure. The appearance, aroma and all important nutrients are largely retained.

For long-term storage, food should be kept at -15 °C or below (coldest setting).

The time it takes for the food to be thoroughly frozen from when it is first placed in the freezer depends on the following factors:

- The set temperature
- The type of food
- How full the freezer compartment is
- The amount and type of food placed in the freezer

Maximum freezing capacity

The maximum freezing capacity indicates the quantity of food that can be thoroughly frozen in 24 hours.

Information on the max. freezing capacity can be found on the rating plate.
⟶ *"Getting to know the appliance" on page 8*

To utilise the maximum freezing capacity, select the coldest freezer temperature 24 hours before placing the fresh food in the freezer.

Requirements for utilising maximum freezing capacity

1. Before placing fresh food in the freezer: select the coldest freezer temperature
2. Take containers out of the freezer compartment and stack the food directly on the shelves and the bottom of the freezer compartment.
3. Place fresh food for freezing as close as possible to the sides.

Fully utilising the freezing capacity

To accommodate the maximum quantity of frozen food:
- Remove all freezer compartment fittings.
- Stack the food directly on the shelves and the bottom of the freezer compartment.

Purchasing frozen foods

- Check that the packaging is not damaged.
- Do not buy food that is past its use-by date.
- The temperature in the commercial chest freezer must be -18 °C or colder.
- Whenever possible, carry frozen food in an insulated bag and place it in the freezer compartment as soon as possible.

When arranging the food, note the following:

- Spread out food using all the space on shelves.
- Do not place food that is to be frozen in contact with food that has already been frozen.

Freezing fresh food

Only freeze food that is fresh and in perfect condition.

Food that is eaten boiled, roasted or baked is more suitable for freezing than food that is eaten raw.

In order to retain the nutritional value, aroma and colour of the food as much as possible, some foods require preparation before they are frozen:

- Vegetables: wash, chop and blanch.
- Fruit: wash, remove stones and peel if required; sugar or ascorbic acid may also be added.

More information can be found in the relevant literature.

Foods suitable for freezing

- Bread and pastries
- Fish and seafood
- Meat
- Game and poultry
- Vegetables, fruit and herbs
- Eggs without their shells
- Dairy products, e.g. cheese, butter and quark
- Prepared dishes and leftovers such as soups, stews, cooked meat and fish, potato dishes, baked casseroles and sweet foods.

Foods not suitable for freezing

- Types of vegetable that are usually eaten raw, such as lettuces or radishes
- Eggs in their shells or hard-boiled eggs
- Grapes
- Whole apples, pears and peaches
- Yoghurt, soured milk, sour cream, crème fraîche and mayonnaise

Packing frozen food

The correct packing method and choice of material definitively determine how well the food keeps its quality and prevents the development of freezer burn.

1. Store food in its packaging.
2. Press out any air.
3. Seal the packing so that it is airtight to prevent the food from losing its flavour or drying out.
4. Label packaging with its contents and date of freezing.

Suitable packing:
- Plastic film wrap
- Polyethylene (PE) freezer bags
- Aluminium foil
- Freezer tubs

Suitable seals:
- Rubber bands
- Plastic clips
- Cold-resistant adhesive tape

Unsuitable packing:
- Wrapping paper
- Greaseproof paper
- Cellophane
- Bin bags and used shopping bags

Frozen food storage times at -18 °C

Fish, sausages, prepared dishes, baked goods	Up to 6 months
Poultry, meat:	Up to 8 months
Vegetables, fruit	Up to 12 months

Defrosting frozen food

The defrosting method should be chosen to suit the food and purpose so as to retain the product quality as well as possible.

Defrosting methods:

- In the fridge compartment (especially suitable for animal products such as fish, meat, cheese and quark)
- At room temperature (bread)
- In a microwave (food to be eaten or cooked immediately)
- In an oven/cooker (food to be eaten or cooked immediately)

Caution!
Do not refreeze defrosted food. It can only be refrozen after it has been made into a ready-to-eat meal (cooked or roasted).
Do not then leave the frozen food in the freezer for the maximum storage period.

Defrosting

Fridge compartment

Defrosting is performed automatically. The water from defrosting drains through the condensation gutters and drain hole in the evaporation zone of the appliance.

Freezer compartment

Thanks to the fully automatic NoFrost system, the freezer compartment remains free of ice. There is no longer any need to defrost it.

Cleaning

Caution!
Avoid damaging the appliance and its fittings.
- Do not use gritty, acidic or chlorine-based cleaning agents or solvents.
- Do not use abrasive cleaning pads or sponges that may scratch surfaces.
  This may lead to corrosion of the metallic surfaces.
- Never clean the shelves or containers in the dishwasher.
  The parts may warp.

Proceed as follows:
1. Unplug the appliance from the mains or switch off the circuit-breaker.
2. Take out the food and store it in a cool place.
   If you have one, place an ice block on the food.
3. If there is layer of frost, wait until it has thawed out.
4. Wipe down the appliance with a soft cloth and warm water and a little pH-neutral washing-up liquid.
   Caution!
   The washing-up liquid solution must not be allowed to get into the lights or run into the evaporation tray through the drain hole.
5. Wipe down the door seal with clean water only and dry it thoroughly afterwards.
6. Reconnect the appliance to the power supply and put the food back in.

Cleaning the fittings

Take the variable fittings out of the appliance for cleaning.
⟶ *"Fittings" on page 9*

Smells

If you notice unpleasant smells:

1. Unplug the appliance from the mains or switch off the circuit-breaker.
2. Remove all food from the appliance.
3. Clean the inside of the appliance.
   ⟶ *"Cleaning" on page 14*
4. Clean all packaging.
5. Pack strongly smelling food in air-tight containers to prevent odours.
6. Plug in the mains plug again or switch on the circuit-breaker again.
7. Arrange the food.
8. After 24 hours, check again to see if the smells have reappeared.

Lighting

Your appliance is equipped with maintenance-free LED lights.

The lights may only be repaired by After-sales Service or an authorised technician.

Noises

Normal noises

Humming: there is a motor running, e.g. refrigeration unit or fan.

Note: Please note: if the appliance was not switched on beforehand, the motors may run more quickly at the beginning.

Bubbling, whishing or gurgling: refrigerant is flowing through the pipes.

Clicking: a motor, switch or solenoid valve is switching on or off.

Crackling: automatic defrosting in the NoFrost system.

Preventing noises

Appliance not level: level the appliance with the aid of a spirit level. If necessary put something underneath it.

Containers, shelves or trays loose or sticking: check removable fittings and re-insert them correctly as required.

Bottles or containers touching one another: move bottles or containers slightly apart from one another.

What to do if there is a fault

Before calling After-sales Service, first check the table below to see whether you can rectify the fault yourself.

The temperature differs considerably from the setting.	
	Switch the appliance off for 5 minutes. ⟶ *"Switching off and shutting down the appliance" on page 11* If the temperature is too high, re-check it after a couple of hours. If the temperature is too low, re-check it after a day.

No display lights up.	
The power plug is not properly plugged in.	Plug in the mains plug.
The circuit-breaker has tripped.	Check the circuit-breakers.
There is a power cut.	Check whether there is power to the appliance.

A warning signal sounds	
Appliance door is open.	Close the appliance door or press the fridge compartment temperature setting button.

After-sales Service

If you cannot manage to rectify the fault yourself, please contact our After-sales Service. We will always attempt to find the best possible solution and avoid unnecessary call-outs by service technicians.

You can find the contact details for your nearest After-sales Service centre below or in the attached After-sales Service directory.

When calling, please quote the product number (E no.) and production number (FD no.) of your appliance, which you will find on the rating plate.
→ *"Getting to know the appliance" on page 8*

Trust in the expertise of the manufacturer. By doing so you will ensure that the repairs are carried out by trained technicians who will use the genuine manufacturer's replacement parts for your domestic appliance.

Repairs and advice on faults

The After-sales Service contact details for all countries are listed in the attached After-sales Service directory.

Warranty

Precise details of the warranty period and terms in your country can be obtained from your nearest After-sales Service point, your specialist retailer or our website.

Bosch Home Appliance Group
P.O. Box 83 01 01
D-81701 Munich
Germany
www.bosch-home.com

9001013963 (9901) en