ARISTON

BCS 313 V

(GB) **Fridge/freezer combined** 1
Instructions for installation and use

(CSI) **Комбинированный холодильник-морозильник** 11
Инструкции по установке и использованию

To maintain the EFFICIENCY and SAFETY of this appliance, we recommend:
- call only the Service Centers authorized by the manufacturer
- always use original Spare Parts

Производитель оставляет за собой право без предупреждения вносить изменения в конструкцию, не ухудшающие эффективность работы оборудования.
- Некоторые параметры, приведенные в этой инструкции, являются приблизительными.
- Производитель не несет ответственности за незначительные отклонения от указанных величин.

Safety - a good habit to get into.

ATTENTION
Read your manual carefully since it contains instructions which will ensure safe installation, use and maintenance of your appliance.
Your Refrigerator is built to International safety standards (EN60) and has been awarded the European approval mark (IMQ) for compliance with UK electrical safety requirements. It also meets the EC standards on the prevention and elimination of radio interference (EC directive 87/308 - 02.06.89).

1. This appliance must not be installed outdoors - not even in an area protected by a roof. It is extremely dangerous to leave it exposed to rain or storms.
2. It must only be used by adults and exclusively to refrigerate and freeze foodstuffs, following the instructions for use contained in this manual.
3. Do not ever touch or handle the appliance with bare feet or with wet hands or feet.
4. It is highly recommended that you do not use extension cords or multiple socket adapters. If the refrigerator is installed between cabinets, make sure that the cord is not bent or dangerously pinched or compressed.
5. Never pull on the cord or the refrigerator to remove the plug from the wall socket - this is very dangerous.
6. Never touch the cooling components within the appliance, especially with wet hands because this could result in injury. Never put ice cubes just removed from the freezer into your mouth because they could stick to your mouth and cause burns.
7. Never clean or perform maintenance on the appliance without first removing the plug from the socket; in fact, turning the knob for adjusting the temperature to the "**0**" setting is not sufficient to eliminate all electrical contact with the mains.
8. Before having your old refrigerator picked up for disposal, remove or make inoperable any locking devices to prevent children who might play in or around the appliance from being locked inside.
9. Before calling for service/assistance in the case of malfunction, consult the chapter entitled "Is There a Problem? to determine whether it is possible to eliminate the problem. do not try to repair the problem by trying to access the internal components of the appliance.
10. If damaged, the power supply cord on this appliance must necessarily be replaced by our service centre because special tools are required for replacement.
11. Do not use electric appliances inside the compartment for food storage, if these are not those recommended by the manufacturer.
12. At the end of the functional life of your appliance – containing cyclopentane gas in the insulation foam and perhaps gas R600a (isobutane) in the refrigeration circuit – the latter should made safe before being sent to the dump.
For this operation, please contact your dealer or the Local Organisation in charge of waste disposal.

Installation

To ensure that the appliance operates properly and to reduce energy consumption, it is important that the appliance is installed correctly.

Ventilation

The compressor and condenser generate heat and, therefore, need to be ventilated properly. Rooms with less than perfect ventilation are not very suited for installation of the appliance. Therefore, it should be installed in a room with an opening (window or French window) that provide the appropriate amount of air re-circulation. It is also important that the room not be too humid.

Away from Heat

This appliance should not be positioned in a place where it is directly exposed to sunlight or directly next to an iven/hob.

Electrical Connection and Earthing

Before proceeding with the electrical connection, make sure that the voltage indicated on the rating plate, located at the bottom left near the vegetable crisper, corresponds to the mains voltage in your home and that the socket is fitted with a standard earthing wire in accordance with safety standards for 46/90 systems. If the socket is not fitted with an earthing wire, the manufacturer will not be held liability for any damages and or injuries arising out of the use of the appliance. Do not use multiple sockets or adapters.
Position the appliance in such a way that you can access the socket where it is plugged in.

Insufficient power?

The electrical socket must be able to handle the maximum power load of the appliance, which is indicated on the rating plate located at the bottom left next to the vegetable crisper.

Before making the electrical connection ...

After the appliance has been delivered, place it in the vertical upright position and wait at least 3 hours before inserting the plug into the socket in order to ensure that it functions properly.

Close-up view

A **Removable door shelves with lid, with egg tray and lidded butter dish**

B **Removable miscellaneous shelf**

C **Hinged shelf**

D **Compartment for a 2 litre bottle**

E **Removable door shelf for bottles**

F **Drain system for drawing off defrost water from freezer compartment**

G **Compartment for storing frozen foods**

H **Ice tray "ESY ICE"**

I **Compartment for freezing fresh foods and storing frozen foods**

J **Compartment for freezing fresh foods and storing frozen foods**

This knob is used to regulate the temperature in the two compartments with the following settings:

0 The refrigerator is off;
1 less cold;
5 colder

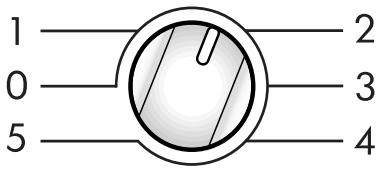

K **Fruit and Vegetable Crispers**

L **Meat/cheese storage box**

M **Removable/Adjustable Shelves**

N **Hinged bottle rack**

O **"A.I.R. System" (Ariston Integrated Refrigeration)**

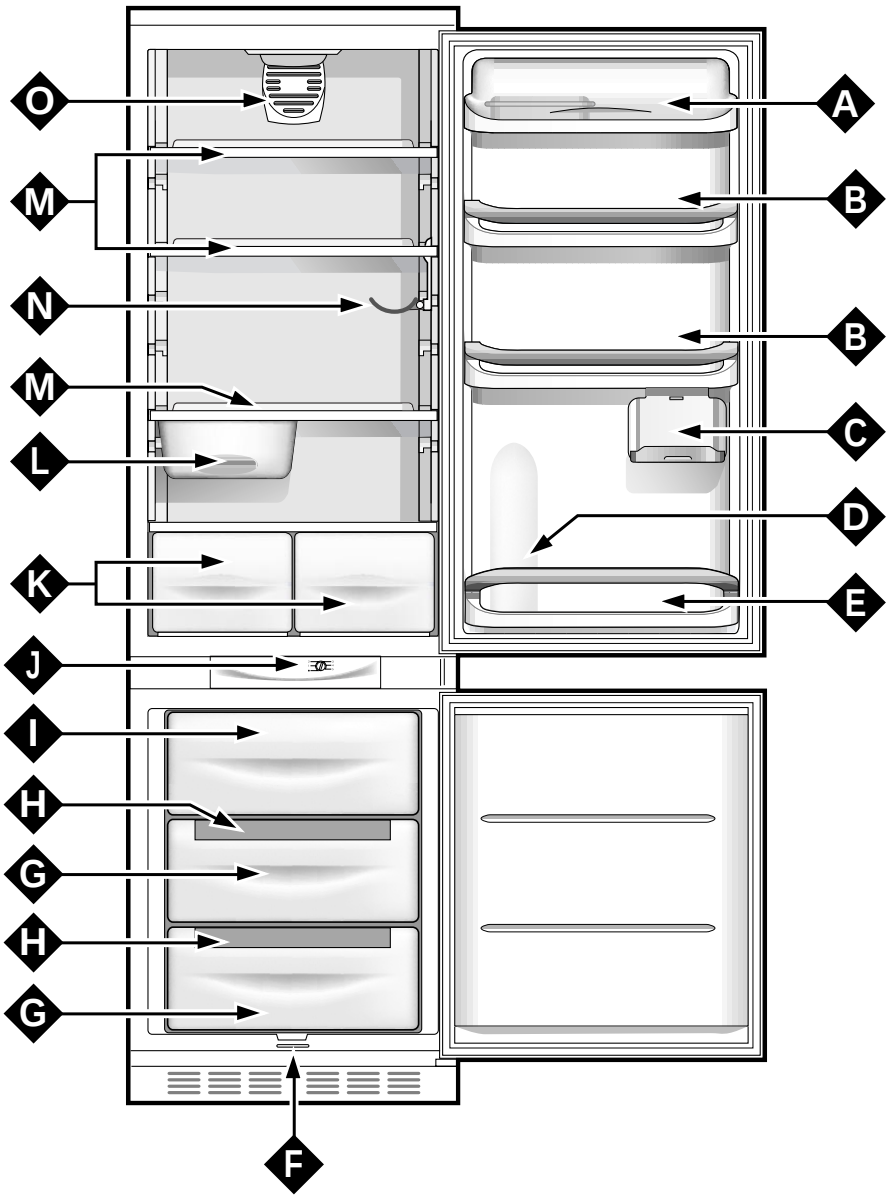

How to use the freezer compartment...

- For the preparation of food to be frozen, please consult a specialized manual.
- Food that has been thawed, even partially, must not be refrozen: you must cook it in order to consume it (within 24 hours) or to freeze it once again.
- Fresh foods that you intend to freeze must not be placed in contact with those that are already frozen or those that have been fast-frozen. Rather, they must be placed on the grid in the freezer compartment, in contact with the walls of the compartment (back or side) if possible. Please keep in mind that proper conservation of frozen foods depends on the speed with which they are frozen.
- During the freezing process, avoid opening the door of the freezer.
- The maximum daily quantity of food that can be frozen is indicated on the rating plate located to the left of the vegetable crisper.
- In order to freeze and then thaw foods optimally, it is recommended that you divide food into small portions so that they freeze quickly and uniformly. The packages should be clearly marked with the content and the date they were frozen.
- Do not open the freezer door in the event of a power failure or malfunction. This precaution will slow the rise in temperature within the compartment. If the door is not opened, frozen and fast-frozen foods will remain in their current state for approximately 9-14 hours.
- Do not place full bottles in the freezer: they could easily burst because all liquids increase in volume when they freeze.
- If the ambient temperature remains below 14°C for an extended period of time, the temperature needed for extended storage of food in the freezer will not be reached, resulting in reduced storage life of the food.

Ice trays

This new concept of ice trays is an exclusive Merloni patent. The fact that they are situated on the top part of the freezer drawers ensures greater ergonomics and cleanliness and leaves more room free inside the drawers : the ice no longer comes into contact with the food placed inside the freezer compartment; furthermore, the dripping of the water during filling is avoided (a lid to cover up the hole after filling with water is also provided).

Instructions for use (Fig. 5)
Fill up the tray with water via the special hole up to the level indicated (MAX WATER LEVEL), taking care not to exceed it: inserting more water than is necessary will lead to the formation of ice which could obstruct the exit of the ice cubes.
If you have used an excessive amount of water, you will have to wait until the ice has melted, empty out the tray and re-fill it with water.
Once you have filled the ice tray up with water through the hole indicated, turn it by 90 °. Thanks to the connected compartments, the water fills up the special shapes, after which you can cover the hole up with the special cap and place the ice tray in the inner door of the freezer compartment.
Once the ice has formed, all you need to do is to knock the tray against a hard surface so that the ice cubes come away from their housing and come out of the same hole used to fill the tray with water. To make it easier for the ice cubes to come out, wet the outside of the tray.
WARNING: every time you fill up the ice tray with water , make sure that the same is completely empty and that there are no traces of ice left inside it.
The minimum time required for ice to form well is approximately 8 hours.

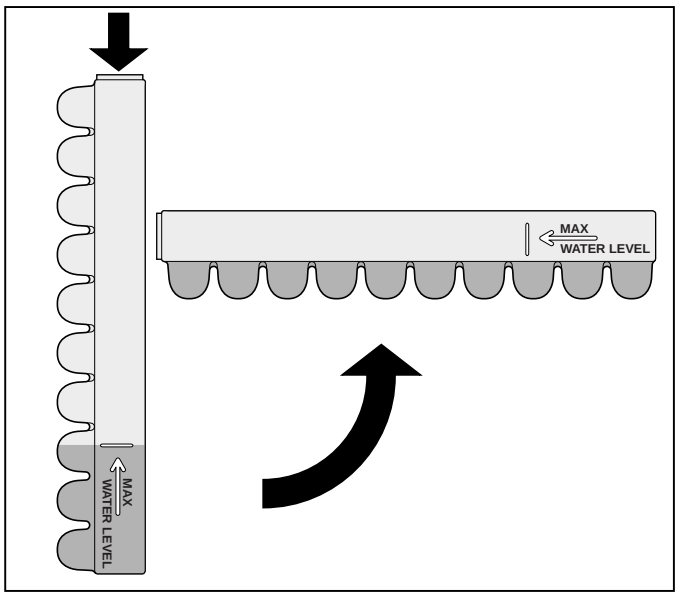

Fig. 5

Guide to Using the Freezer

Meat and Fish

Food	Wrapping	Tenderising (days)	Storage (months)	Thawing Time
Beef Roast	Tinfoil	2 / 3	9 / 10	Not required.
Lamb	Tinfoil	1 / 2	6	Not required.
Pork Roast	Tinfoil	1	6	Not required.
Veal Roast	Tinfoil	1	8	Not required.
Veal/Pork Chops	Each piece wrapped in cling wrap and then in tinfoil (4 to 6 slices)		6	Not required.
Veal/Lamb Cutlets	Each piece wrapped in cling wrap and then in tinfoil (4 to 6 slices)		6	Not required.
Minced Meat	In aluminium containers covered with cling wrap.	Freshly minced	2	Slowly in refrigerator.
Heart and Liver	Plastic Baggies		3	Not required.
Sausages	Cling Wrap or Tinfoil		2	As necessary.
Chicken and Turkey	Tinfoil	1 / 3	9	Very slowly in refrigerator.
Duck and Goose	Tinfoil	1 / 4	6	Very slowly in refrigerator.
Pheasant, Partrige and Wild Duck	Tinfoil	1 / 3	9	Very slowly in refrigerator.
Hare and Rabbit	Tinfoil	3 / 4	6	Very slowly in refrigerator.
Venison	Tinfoil or Cling Wrap	5 / 6	9	Very slowly in refrigerator.
Large Fish	Tinfoil or Cling Wrap		4 / 6	Very slowly in refrigerator.
Small Fish	Plastic Baggies		2 / 3	Not required.
Crustaceans	Plastic Baggies		3 / 6	Not required.
Shellfish	Store in salted water in aluminium containers or plastic containers.		3	Very slowly in refrigerator.
Boiled Fish	Tinfoil or Cling Wrap		12	In hot water.
Fried Fish	Plastic Baggies		4 / 6	Directly in pan.

Fruits and Vegetables

Food	Preparation	Blanching Time	Wrapping	Storage (months)	Thawing Time
Apples and Pears	Peel and cut into slices.	2'	In Containers (cover with syrup)	12	In refrigerator very slowly.
Apricots, Peaches, Cherries and Plums	Peel and pit.	1' / 2'	In Containers (cover with syrup)	12	In refrigerator very slowly.
Strawberries Blackberries and Raspberries	Rinse and fry.		In Containers (cover with sugar)	10 / 12	In refrigerator very slowly.
Cooked Fruit	Cut, cook and strain.		In Containers (add 10% sugar)	12	In refrigerator very slowly.
Fruit Juice	Wash, cut and crush.		In Containers (sugar to taste)	10 / 12	In refrigerator very slowly.
Cauliflower	Remove leaves, cut head into small pieces and blanch in water and a little lemon juice.	2'	Plastic Baggies	12	Not required.
Cabbage and Brussel Sprouts	Wash and cut into small pieces.	1' / 2'	Plastic Baggies	10 / 12	At room temperature.
Peas	Shell and wash.	2'	Plastic Baggies	12	Not required.
French Beans	Wash and slice if required.	2	Plastic Baggies	10 / 12	Not required.
Carrots, Peppers and Turnips	Peel, wash and slice if necessary.	3' / 4'	Plastic Baggies	12	Not required.
Mushrooms and Asparagus	Wash, peel and cut up.	3' / 4'	Plastic Baggies or Containers	6	At room temperature.
Spinach	Wash and mince.	2'	Plastic Baggies	12	At room temperature.
Vegetable for Soups	Wash and cut up in small pieces.	3'	Plastic Baggies or Containers	6 / 7	Not required.
Various Foods	**Preparation**	**Blanching Time**	**Wrapping**	**Storage (months)**	**Thawing time**
Bread			Plastic Baggies	4	At room temperature and in the oven.
Cakes			Plastic Baggies	6	About 10 minutes at room temperature, cook at 100/200°C.
Cream			Plastic Containers	6	At room temperature or in refrigerator.
Butter			In original wrapping or tinfoil	6	In refrigerator.
Boiled Food or Vegetable Soup			Plastic or Glass Containers	3 / 6	At room temperature or in hot water.
Eggs			Freeze without shells in small containers	10	At room temperature or in refrigerator.

Tips on Saving Energy

- Install the Appliance Properly
In other words, away from sources of heat and direct sunlight, in a well ventilated room complying with the minimum distances indicated in the paragraph entitled, " Installation/Ventilation.".

THE ACTUAL ENERGY CONSUMPTION OF THE APPLIANCE DEPENDS ON THE WAY THE SAME IS USED AND ON ITS LOCATION.
The consumption tests were performed in 560mm deep column units, the most common installation setting for this appliance.

- Use the Right Temperature Setting
A setting which is too cold increases energy consumption.

- Do not Overfill
To conserve food properly, the cold air must circulate freely within the refrigerator. If it is overfilled, this will prevent proper air circulation, forcing the compressor to work continuously.

- Close the Doors
Open your refrigerator as little as possible because each time you do so you loose much of the cold air. To raise the temperature to the proper level again, the motor must work for a long time, consuming energy.

- Keep an Eye on the Seals
Keep the seals clean and make sure that they adhere well to the door. This alone will ensure that no cold air escapes.

- No Hot Foods
A hot pot or pan placed in the refrigerator immediately raises the temperature several degrees. Let hot cookware and food cool to ambient temperature before placing them in the refrigerator.

- Defrost the Freezer
Check the thickness of the frost on the walls of the freezer and immediately defrost it if the layer of frost is too thick. (see the section entitled, "Keeping your Appliance in Shape").

Keeping Your Appliance in Shape

Before doing any cleaning, disconnect the appliance from the electricity (by pulling out the plug or turning off the general switch in your home).

Defrosting

WARNING: do not damage the refrigeration circuit. Do not use mechanical devices or other tools to speed up the defrosting process, unless they have been recommended by the manufacturer.

How to Defrost the Refrigerator
This appliance defrosts automatically and the water is channeled to the back toward the drain installed for this purpose (fig. 6). Here, the heat produced by the compressor will make it evaporate. The only thing you must do is to periodically check and clean the hole of the drain, which is located behind the vegetable crispers, so that the water drains properly.

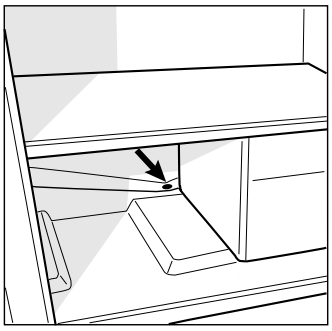

Fig. 6

How to Defrost the Freezer
- Every so often, remove the frost with the scraper provided with the appliance (do not use knives or metal objects).
- If the frost is more than 15 mm thick, the freezer must be defrosted.
Proceed as follows: turn the thermostat knob (**H**) to the · setting **"0"** (Fig. 7). Then wrap all the frozen and fast-frozen food in newspaper, placing it either in the refrigerator or in a cool place. Leave the freezer door open so that the frost thaws completely. You can speed this process by placing containers of warm water in the compartment.
The unit is provided with a system which allows the defrost water to be collected in a container to be placed beneath the unit (proceed as illustrated in fig 8).

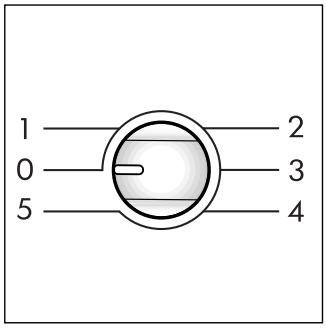

Fig. 7

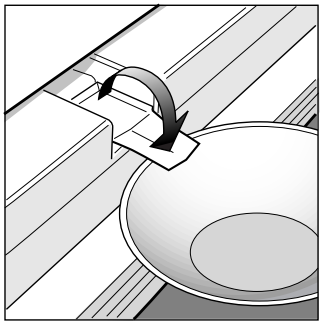

Fig. 8

Cleaning and Special Maintenance

Before cleaning the refrigerator, disconnect it from the electrical mains (by removing the plug from the socket or by turning off the main electricity switch for the apartment or house).

- The materials used to build your appliance are hygienic and do not transmit odors. However, to preserve this quality of your appliance, the food stored in it must be well closed and covered to prevent spills which could stain it and cause unpleasant odors.
- Only water and baking soda. To clean both the interior and exterior, use a sponge with warm water and baking soda, which is, among other things, a good disinfectant. If you do not have any in the house, you can use a neutral soap.
- What not to use. Never use abrasives, bleach or ammonia. Solvents and similar products are strictly prohibited.
- All the removable part should be taken out and allowed to soak in hot water and dishwashing soap. Rinse and dry them well before putting them back in the refrigerator.
- When the appliance is not used for a long time. If you decide not to use the appliance (during the summer), it must cleaned and the doors left open to prevent the formation of mold and unpleasant odors.
- Replacing the light bulb.

When replacing the light of the refrigerator compartment unplug the unit from the power supply and chang the used lamp with another one of not more than 15 W.
For access ti lamp "**A**", remove the centre screw "**B**" at the back of the lamp cover, as indicated in fig. 9.

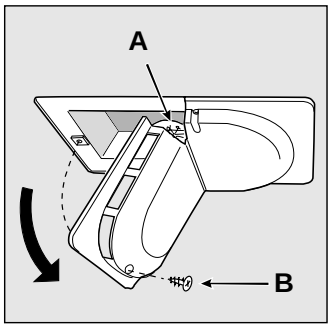

Fig. 9

Is There a Problem?

The refrigerator does not function.

Have you checked whether:
• The main switch for the electricity to the apartment or home has been turned off;
• The plug is properly inserted in the outlet;
• The outlet is adequate; try inserting the plug into another outlet in the room.

The refrigerator and the freezer do not cool properly.

Have you checked whether:
• The doors do not close well or the seals are faulty;
• The doors are left open too long;
• The thermostat knob is not on the proper setting;
• The refrigerator or freezer is overfilled.

The food in the refrigerator becomes too cold.

Have you checked whether:
• The thermostat knob is on the proper setting;
• The food is in contact with the back wall - which is the coldest part.

The motor runs continuously.

Have you checked whether
• The doors are not closed well or have remained open too long;
• The ambient temperature is too high;
• The thermostat knob is not on the proper setting.

The appliance makes too much noise.

The gas refrigerant produces a slight noise even when the compressor is not running (this is not a defect).

Have you checked whether:
• The refrigerator is level.
• The appliance was installed between cabinets or objects that vibrate and make noise.

There is water on the bottom of the refrigerator.

Have you checked whether:
• The hole for draining the water from the frost is clogged (see fig. 6).

If after all the checks, the appliance still does not operate or the problem persists, call the nearest Service Centre and inform them of: the type of problem, the abbreviation of the model name (Mod.) and the relative numbers (S/N) written on the rating plate located at the bottom left next to the vegetable crisper (see examples in the figures below).

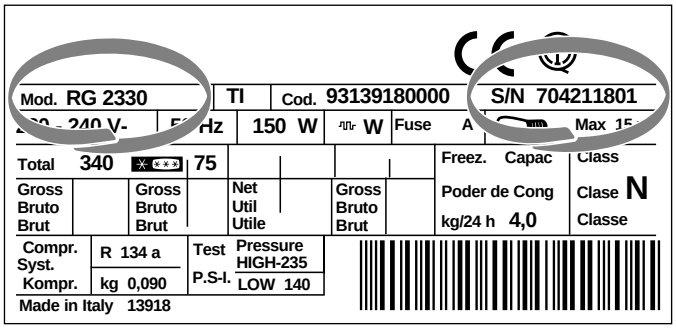

Never call on unauthorized technicians and always refuse spare parts which are not originals.

Безопасность — хорошая привычка

´íŁìàòåºüíîïðî÷ŁòàØòå äàíîå ðóŒîâîäæòâî: îíî ïîìîæåò´àì îçíàŒîìŁòüæ æâîçìîæíîæòüŁ ıîºîäŁºüíŁŒà, ïðàâŁºàìŁåªî ìîíòàæà, ŁæïîºüçîâàíŁÿ Ł ÎÆæºóæŁâàíŁÿ.

´à‡ ıîºîäŁºüíŁŒ Łçªîòîâºåí â æîòàåòæòâŁŁ æ ìåæäóíàðîäíîßìŁ æòàíäàðòàìŁ ÆåçîïàæíæòŁ (EN 60). ˙à óäîâºåòâîðåíŁå òðåÆîâàíŁØ ýºåŒòðîÆçîïàæíæòŁ ´åºŁŒîÆðŁòàíŁŁ ıîºîäŁºüíŁŒ Æßº îòìå÷åí ìàðŒîØ æîòâåòæòâŁÿ (IMQ). ¸ÆîðóäîâàíŁå îòâå÷àåò òðåÆîâàíŁÿì ¯Ñ (äŁðåŒòŁâà ¯Ñ 87/308 îò 02.06.89) î ïðåäîòâðàøåíŁŁ Ł óæòðàíåíŁŁ ðàäîïîìåı.

1. ÕîºîäŁºüíŁŒ ðàçðàÆîòàí äºÿŁæïîºüçîâàíŁÿ âíóòðŁ ïîìåøåíØ. ˝Ł ïðŁ ŒàŒŁı ÎÆæòîÿòåºüæòâàı íå ŁæïîºüçØòåå ÎÆðóäîâàíŁå íà óºŁòåå.

2. ÕîºîäŁºüíŁŒ äîºæåí Łæïîºüçîâàòüæÿ â äîìàł íŁı óæºîâŁÿı äºÿ çàìîðàæŁâàíŁÿ æâåæŁ. ïðîäóŒòîâ Ł ıðàíåíŁÿ çàìîðîæåííßı ïðîäóŒòîâ â æîòâåòæòâŁŁ æ ŁíæòðóŒöŁÿì äàíîªîðŒîâîäæòâà.

3. ˝åŒàæàØòåæü îÆîðóäîâàíŁÿ ìîŒðßìŁ Ł ºŁ æßðßìŁ ðóŒàìŁ. ˝å ïîºüçóØòåæü ıîºîäŁºüíŁŒîì ÆîæŁŒîì.

4. ˝åŁæïîºüçóØòå äºÿ ïîäŒºþ÷åíŁÿ ıîºîäŁºüíŁŒà óäºŁíŁòåºŁ Ł òðîØíŁŒŁ. ¯æºŁ ıîºîäŁºüíŁŒ óæòàíîâåí ìåæäó ïðåäìåòàìŁ ìåÆåºŁ, óÆääŁòåæü, ÷òî ïðîâîä íå ïððåŒðó÷åí Ł íå ïðŁæàò.

5. ˝ŁŒîªäà íåòÿíŁòå çà ïðîâîäŁºŁ çà æàì ıîºîäŁºüíŁŒ, ÷òîÆß îœîåäŁíŁòüì åªî îò ðîçåòŒŁ. Ýòî î÷åíü îïàæíî.

6. ˝å ŒàæàØòåæü âíóòðåííŁı îıºàæäàþ øŁı ýºåìåíòîâ ıîºîäŁºüíŁŒà, îœîÆåííî âºàæíßìŁ ðóŒàìŁ, ÷òîÆß íå ïîºó÷Łòü ìåæòíîå îÆìîðîæåíŁå. ˝å ÆåðŁòå æðàçó â ðîò ŒóÆŁŒŁ ºüäà, âßíóòßå Łç ìîðîçŁºüíîªî îòäåºåíŁÿ ´ß ìîæåòå îÆæå÷üæÿ.

7. ˇåðåä âßïîºíåíŁì ºþÆı ðàÆîò ïî ìîØå Ł ºŁ îÆæºóæŁâàíŁþ îœîåäŁíŁòåå ıîºîäŁºüíŁŒ îò æåòŁ, âßíóâ âŁºŒó Łç ðîçåòŒŁ. ¨ ìåØòå â âŁäó, ÷òî óæòàíîâŒŁ òåðìîæòàòà â ïîºîæåíŁå "0" íåäîæòàòî÷íî äºÿ ïîºíîªî îòŒº÷åíŁÿ ýºåŒòðîïŁòàíŁÿ ıîºîäŁºüíŁŒà.

8. ˇðåæäå ÷åì ŁçÆàâŁòüæÿ îò æòàðîªî ıîºîäŁºüíŁŒà íåÎıîäŁì æºîìàòü Ł ºŁ æíÿòü æ íåªî çàïŁðàþøŁå ïðŁæïîæÆºåíŁÿ, ÷òîÆß îÆçîïàæŁòü äåòåØ, Œîòîðßå ìîªóò çàŒßòü æåÆÿ âíóòðŁ âî âðåìÿ Łªðß.

9. ˇðŁ âîçíŁŒíîâåíŁŁ íåæòàíäàðòíØ æŁòóäöŁŁ îòŒº÷Łòå ıîºîäŁºüíŁŒ îò æåòŁ ïîçâîíŁòå â æåðâŁæíßØ öåíòð, òåºôîí Œîòîðîªî íàïå÷àòàí â ªàðàíòŁØíîì äîŒóìåíòå (æåðâŁæíîì æåðòŁôŁŒàòå, æåðâŁæíîØ ŒíŁæŒå). ˇåðåä çâîíŒî â æåðâŁæíßØ öåíòð ïðî÷ŁòàØòå ðàçäåº «ÓæòðàíåíŁå íåŁæïðàâíîæòåØ». ´îçìîæíî ´ß æàìŁ ðå‡Łòå âîçíŁŒ‡óþ ïðîÆºåìó. ˝å ïßòàØòåæü æàì îæòîÿòåºüíî ÷ŁíŁòü ıîºîäŁºüíŁŒ, åæºŁ òðåÆóåòæÿ â ìå‡àòåºüæòâî â åªî âíóòðåííŁå Œîì ïîíåíòß.

10. ¯æºŁ íåÎıîäŁì îçàìåíŁòü ïŁòàþøŁØ ŒàÆåºü, îÆðàòŁòåæü â æåðâŁæíßØ öåíòð (â ºþÆî æó÷åå ïðŁ ïîäæîåäŁíåíŁŁ ŒàÆåºÿ äîºæíß Łæïîºüçîâàòüæÿ æïåöŁàºüíßå ŒîíòàŒòß Ł Łíæòðóìåíòß).

˙àïðåøåòæÿ ŁçìåíåíŁå ŒîíæòðóŒöŁŁ ıîºîäŁºüíŁŒà Ł âìå‡àòåºüæòâî ºŁö, íå óïîºíîì÷åíß ïðîŁçâîäŁòåºåì íà ªàðàíòŁØíßØ ðåìîíò.

11. ˝å ŁæïîºüçóØòå ýºåŒòðîïðŁÆîðß, ïðåäíàçíà÷åííßå äºÿ ïðŁªîòîâºåíŁÿ ïŁøŁ, äºÿ åå ıðàíåíŁÿ â ıîºîäŁºüíŁŒå, åæºŁ ýòî íå ðåŒîìåíäîâàíî ïðîŁçâîäŁòåºåì.

12. ¯æºŁ ´ß ðå‡ŁºŁ Æîºü‡å íå Łæïîºüçîâàòü ´à‡ ıîºîäŁºüíŁŒ, ïåðåä òåì ŒàŒ âßÆðîæŁòü, ïîçàÆîòüòåæü ÎÆ åªî óòŁºŁçàöŁŁ. ´à‡ ıîºîäŁºüíŁŒæîåðæŁò öŁŒºîïåíòàíîâßØªàç â ŁçîºÿöŁîíííØ ïåíå Ł, âîçìîæíî, ŁçÎóòàí (R600) â îıºàæäàþøåì ŒîíóðåÂ ïîæºåäíåì æó÷àå ´à‡ íåÎıîäŁºüíŁŒ æâÿçàòüæ æ ìåòíîØ îªàíŁçàöŁåØ, îòâåòæòâåíííØ çà óòŁºŁçàöŁþ.

Установка

Правильная установка необходима для обеспечения надежной и наиболее эффективной работы холодильника.

Вентиляция

˚îì ïðåææîð Ł ŒîíäåíæàòîðıîºîäŁºüíŁŒà â ïðîöåææå ðàÆîòß íà¤ðåâàþòæÿ, ïîýòìó íåÎıîäŁì îÆåæïå÷Łòü äîæòàòî÷íóþ âåíòŁºÿöŁþ. ÕîºîäŁºüíŁŒ äîºæåí Æßòü óæòàíîâºåí â ıîðîłî ïðîâåòðŁâàåìîì ïîìåøåíŁŁ æ íîðìàºüíîØ âºàæíîæòüþ. ˙àïðåøåíî óæòàíàâŁâàòü ıîºîäŁºüíŁŒŁ â ïîìåøåíŁÿı æ ïîßł‡ííîØ âºàæíîæòüþ, íàïðŁìåð, âàííßı Œîìíàòàıı, ïîäâàºàı.

Не располагайте вблизи источников тепла

˝å æºääóåò óæòàíàâºŁâàòü ıîºîäŁºüíŁŒ òàŒ, ÷òîÆß îí íàıîäŁºæÿ ïîä âîçäåØæòâŁòåì ïðÿæåíŁå æåòŁ æîîòâåòæòâóåò ääííßì, óŒàçàííßì â òàÆºŁöå, Œîòîðàÿ íàıîäŁòæÿ íà ºâåîØ æòîðîíå ıîºîäŁºüíîªî îòäåºåíŁÿ ðÿäîì æ ÿøŁŒàìŁ äºÿ ıðàíåíŁÿ îâîøåØŁ ôðóŒòîâ; ðîçåòŒà çàçåìºåíà â æîòâåòæòâŁŁ æ íîðìàìŁ ÆåçîïàæíæòŁ.

˙àïðåøåíî ŁæïîºüçîâàíŁå ïåðåıîäíŁŒîâŁ óäºŁíŁòåºåØ, òàŒ ŒàŒ îíŁ æîçäàþò îïàæíæòü âîçªîðàíŁÿ.

¸ÆîðóäîâàíŁå, ïîäŒºþ÷åííåæ íàðó‡åíŁåìì òðÆîâàíŁØ ÆåçîïàæíæòŁ Æßòîâßı ïðŁÆîðîâÆîºü îØ ì øíîæòŁ, Łçºîæåííßı â äàííîØ ŁíæòðóŒöŁŁ, ÿâºÿåòæÿ ïîòåíöŁàºüíîîïàæíßì. ˇðîŁçâîäŁòåºü íå íåæåò îòâåòæòâåíííæòŁ çà óøåðÆ çäîðîâüþ Ł æîÆæòâåíííæòŁ, åæºŁ îí âßçâàí íåæîÆºþäåíŁåì óŒàçàííßı íîðì óæòàíîâŒŁ.

Холодильник должен быть установлен таким образом, чтобы Вы всегда имели доступ к розетке.

Розетка

–îçåòŒà äîºæíà âßäåðæŁâàòü ïîºíóþ ýºåŒòðŁ÷åæóþ íàªðóçŒó ıîºîäŁºüíŁŒà, Œîòîðàÿ óŒàçàíà â òàÆºŁ÷Œå ıàðàŒòåðŁæòŁŒ îÆîðóäîâàíŁÿ.

Перед подключением к электросети

ÓæòàíîâŁòå ıîºîäŁºüíŁŒ ååðòŁŒàºüíî Ł ïîäîæäŁòå ïðŁìåðíî 3 ÷àæà ïåðåä ïîäŒºþ÷åíŁåì åªî Œ ýºåŒòðîæòàòŁ ýòî íåÎıîäŁì îª äºÿ ïðàâŁºüíØ ðàÆîòß ıîºîäŁºüíŁŒà.

Описание

A **Съемная полка с лотком для яиц и масленкой**

B **Съемная полка для разных продуктов**

C **Полка с крышкой**

D **Гнездо для одной бутылки ёмкостью 2 литра**

E **Съемная дверная полка для бутылок**

F **Дренажная система для отвода оттаявшей воды**

G **Отделение для хранения замороженных продуктов**

H **Лоток для льда "EASW ICE"**

I **Отделение для замораживания свежих продуктов и хранения замороженных продуктов**

J **Рукоятка термостата**

ıîºîäŁºüíîªî îòääºåíŁÿ —óŒîÿòŒà òåðìîæòàòà ïîçâîºÿåò ðåªóºŁðîâàòü òåìïåðàòóðó â ıîºîäŁºüíîì Ł ìîðîçŁºüíîì îòääºåíŁÿı. ´îçìîæíß æºääóþøŁå óæòàíîâŒŁ:

0 ıîºîäŁºüíŁŒ âßŒºþ÷åí;
1 ìŁíŁìàºüíîå îıºàæääåíŁå;
5 ìàŒæŁìàºüíîå îıºàæääåíŁå.

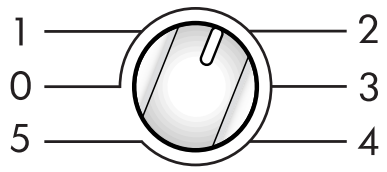

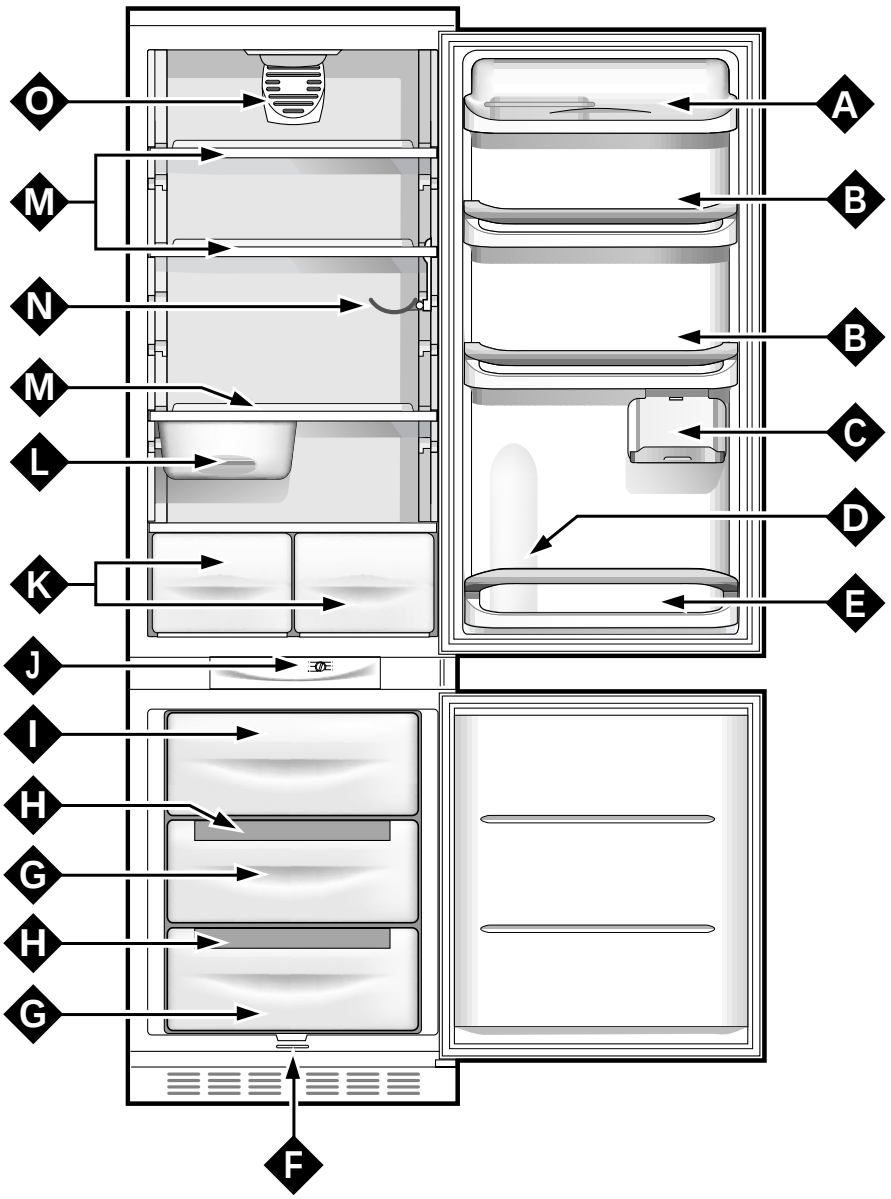

Включение холодильника

ВНИМАНИЕ
После установки подождите примерно три часа перед тем, как подключить холодильник к электросети, чтобы быть уверенными, что хладагент после транспортировки распределился должным образом – это необходимо для правильной работы холодильника.

˜î ïî ìåøåíŁÿ ïðîäóŒòîâ â ıîºîäŁºüíŁŒ íåîÆıîäŁìî âßìßòüâíóòðåííèå ïîâåðıíîæòŁ ıîºîäŁºüíîØŁ ìîðîçŁºíîØ ìàøèíêè. ˘îæºåòîªî Œ ïîŒºþ÷ŁºŁ ıîºîäŁºüíŁŒ ýºåŒòðŁ÷åæŒîØ ºàáåŁû, óÆåäŁòåæü, ÷òî ºàì ïî÷Œà â ıîºîäŁºüíîì îòñåºàåü, óæòàíîâŁòå ðóŒîÿòŒóòåðìîæòàòà. Ì ïîäîæäèòå íåñêîëüêî ìèíóò ïîºîæåíŁ (**3**), ÷ådåç íåæŒîºüêî ìîìåòîâ ïîìåòŁòü ïðîäóŒòß â ıîºîäŁºüíîì îòſåíŁ.

Использование холодильного отделения

Òåì ïðèòàóòðà âíóòðŁ ıîºîäŁºüíîªî îòäåºåíŁÿ àâòîìàòŁ÷åæŒ ðåªóºŁðóåòæÿ â æî îòâåòæòâŁŁ æ ïîçŁöŁåØ, óæòàíîâºåíîØ ðóŒîÿòŒîØ òåðìîæòàòà.

1 íàŁìåíåå ıîºîäíßØ ðåæŁì

5 – íàŁÆîºåå ıîºîäíßØ ðåæŁì

Ìß ðåŒîìåíäóåì óæòàíàºŁâàòü òåðìîæòàò íà æðåäíþþ ïîçŁöŁþ.

˜ºÿ òîªî, ÷òîÆß óâåºŁ÷Łòü ïðîæòðàíæòâî, îïòŁìŁçŁðîâàòü ðàæïîºîæåíŁå ïðîäóŒòîâ Łóºó÷ŁŁòü âŁäŁìîæòü âíóòðŁ îòäåºåíŁÿ, ŁæïàðŁòåºü ðàæïîºîæåí íà çàäíåØ ïàíåºŁ ıîºîäŁºüíîªî îòäåºåíŁÿ. ´î âðåìÿ ðàÆîòß ıîºîäŁºüíŁŒà ïàíåºü ìîæåò ïîŒßââòüæÿ Łíåå ìŁºŁ ŒàïºÿìŁ âîäß â çàâŁæŁìîæòŁ îò òîªî, ðàÆîòàåò Œîìïðåæîð â äàííßØ ìîìåíòŁºŁ íåò. ´åÆåæïîŒîØòåæü, ýòî æîâðåæíîíîðìàºüíî.

¯æºŁ òåðìîæòàò óæòàíîâºåí íà ìàŒæŁìàºüíóþ ïîçŁöŁþ (íàïðŁìåð, ıîºîäŁºüíŁŒ æŁºüíî çàïîºíåí ïðîäóŒòàìŁ ŁºŁ òåì ïåðàòóðà â ïîìåøåíŁŁ î÷åíü âßæŒàÿ), òî Œîì ïðææîð ìîæåò ðàÆîòàòü Æåæïðåðßâî, â ðåçóºüòàòå ÷ªî íà ïàíåºŁ ŁæïàðŁòåºÿ ÎÆðàçóåòæÿ æºîØ Łíåÿ. Ýòî ïðŁâîäŁò Œ ïîâßŁåíîìó ïîðåÆºåíŁþ ýºåŒòðîýíåðªŁŁ. ´î ŁçÆåæàíŁå ïîäîÆíîØ æŁóòàöŁŁ ïðîæò óæòàíîâŁòå ðóŒîÿòŒó òåðìîæòàòà **A** íà ìåíüłóþ ïîçŁöŁþ, òàŒ ÷òîÆß ıîºîäŁºüíŁŒ ðàçìîðîçŁºæÿ àâòîìàòŁ÷åæŒŁ.

ÕîºîäŁºüíîå îòäåºåíŁå ´àŁåªî ıîºîäŁºüíŁŒà îæíàøåíî æŁæòåìîØ îıºàæäåíŁÿ âíçâóıà **"A.I.R. System"**, Œîòðàÿ ïîçâîºÿåò äâæòŁªàòü îïòŁìàºüíîªî ðåæŁìà ıðàíåíŁÿ ïðîäóŒòîâ, âòî æå âðåìÿ, óïðîøåò ïðîöåææ ŁæïºüçîâàíŁÿ ıîºîäŁºüíŁŒà Æºàîäðÿ æºåäóþ øŁì ôóíŒöŁÿì:

- *Быстрое восстановление температуры:* ïîæºå îòŒßðâàíŁÿ äâåðöß âíóòðåííÿÿ òåìïåðàòóðà âîçâðàøåòæÿ Œ îïòŁìàºüíîìó çíà÷åíŁþ Æßæòðåå, óºó÷Łàÿ ðåæŁì ıðàíåíŁÿ ïðîäóŒòîâ.
- *Ровное распределение температуры:* ïîçâîºÿåò ïîìåøàòü ºþÆßå ïðîäóŒòß íà ºþÆßå ïîºŒŁ.
- *Высокий уровень влажности:* óâåºŁ÷ŁâååòæðîŒ ıðàíåíŁÿ ïðîäóŒòîâ.

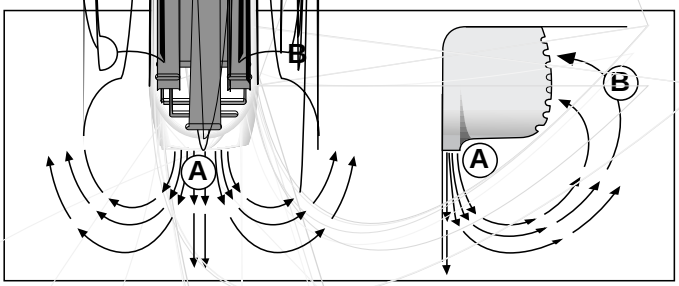

A - âßäóâàåìßØ âîçäóı, îıºàæäàþ øŁØæÿ ïðŁ æîïðŁŒîæíîâåíŁæ ıîºîäíîØ ïàíåºüþ;

B - âòÿªŁâàåìßØ íàªðåòßØ âîçäóı.

ÑºåäóØòå ŁíæòðóŒöëŁ ïî ıðàíåíŁÞ: ïðŁ íåïðäâŁºüíîì ıðàíåíŁŁ äàæå æàìßå æâåæŁå ïðîäóŒòß Æßæòðî Łæïðòÿòæÿ.

´îïðåŒŁ ÎÆøåŁçâåæòíîìó ìíåíŁÞ ïîìíŁòå, ÷òî ïðŁªîòîªíîíßå ïðîäóŒòß ìîæíî ıðàíŁòü ìåíüłåå âðåìÿ, ÷åì æâåæŁå.

ÕîºîäŁºüíîå îòäåºåíŁå îÆîðóäîâàíî ïðàŒòŁ÷íßìŁ æœåìíßìŁ ïîºŒàìŁ (—Łæ. 1), âßæîòàŒîòðß ìîæåò ðåªóºŁðîâàòüæÿ, ýòî ïîçâîºÿåò ðàçìåøàòü Œðóïíßå óïàŒîâŒŁ Łæîüłå åìŒîæòŁ. ˘îŒŁ ìîªóò Æßòü íàŒºîíåíß äºÿ ıðàíåíŁÿ îŒðßòòı Æóòß°îŒ.

˜àØòå ïŁøå îæòßòü, ïåðåä òåì ŒàŒ ïîìåøàòü åå â ıîºîäŁºüíŁŒ. Ýòî ïîçâîºŁòŁçÆæàòü ïîâßłåíŁÿ òåìïåðàòóðß â ıîºîäŁºüíŁŒå, à æºåäîâàòåºüíî, äîïîºíŁòåºüíîØ íàªðóçŒŁ íà Œîìïðåæîð Ł äîïîºíŁòåºüíîªî ðæıîäà ýºåŒòðîýíåðªŁŁ.

˝åæòàâüòå â ıîºîäŁºüíŁŒ æŁäŒîæòŁ â îŒðßòòı åìŒîæòı, ýòî óâåºŁ÷ŁòŁ âºàæíîæòü ïðŁåâäåòŒ ôîðìŁðîâàíŁÞ Łíåÿ íà æòåíŒàı.

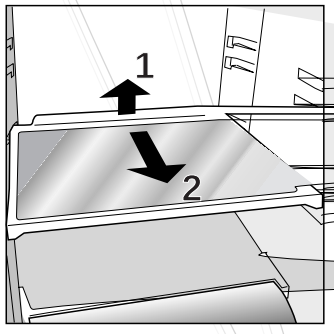

—Łæ. 1

˚îíòåØíåð äºÿ ıðàíåíŁÿ æßðà/ìÿæà (**L**) - æœåìíßØ. ˜ºÿ îïòŁìŁçàöŁŁ æâÎæîäíîªî ìåæòà ŒîíòåØíåð ìîæíî æäâŁíóòü ïîïåðåŒ (–Łæ. 2).

`îŒîâàÿ îòŒŁäíàÿ ïîºŒà äºÿ Æóòßº îŒ (**N**) ìîæåò Łæïîºüçîâàòüæÿ äºÿ ªîðŁçîíòàºüíîªî ıðàíåíŁÿ ºþÆîØ Æóòßº ŒŁ (–Łæ. 3) Ł ºŁ íåæŒîºüŒŁı (2-4-ı) Œîíæåðâíßı ÆàíîŒ (–Łæ. 4). ¯æºŁ ïîºŒà íåŁæïîºüçóåòæÿ, åå ìîæíî çàŒðßòü, îæâîÆîäŁâ ìåæòî â ıîºîäŁºüíŁŒå.

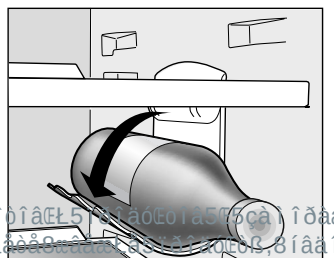

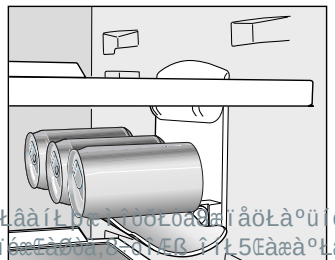

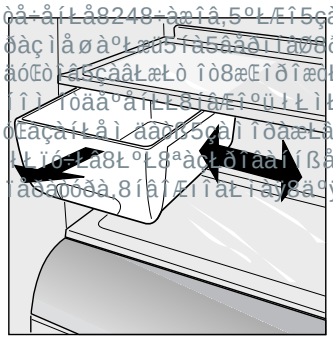

—Łæ4 2—Łæ4 3—Łæ4 4˜ºÿ5ïîäªîòîâŒŁ5ïîäóŒòîâ5Œçàìîðæ ŁâàíŁ ìæ<ıöŁöåŒæïåöŁàºüíóþ5Łı
òå÷åíŁå8248÷àæîâ,5ºŁÆî5çàìîðîçŁòü.2.˚îªäà5çàìîðæŁâàåòâ8æâŁâ5ïîðöŁßı,8íâàîïæŒàöå,8˜ñíÆß îŁ5Œàæàº Łæü5ðà
ðàçìåøàºŁæü5íàŠââòıâððåŁåòŒâ8ìîðîçŁºüíîØŒàìåðß,8ïî5âîçìîæíîæòŁ8æîðŁŒàæàÿæü5æ5çàäíâ/ßŁÆîŒîªßìŁ8æòåíŒàì
åóŒòâûçââŁæŁò îò8æŒîðîæŒŁ8çàìîðæŁâàíŁÿ.3. Ì àŒæŁìàºüíîâ8Œî°Ł÷åæòàîßıðîäŒòâ,8Œîòîðîâ8âß8ìî-ªåòå8çàìîðîçŁòüŒ
îìî îòåå°åñîŁâßíâÆî°üŁŁìŁ8ïîðöŁÿìŁ;8ýòîæïîæÆæòâóåò5Æî°åâ5Æßæóðîîò Ł8îäââæîîìòçâîîðæŁâàíŁþ. –âŒîîâîäóåì â
òŁâçàíŁåì äàñ5ıâìîðæŁâàíŁÿ.6.´8æºó÷àå8æÆîåâ5â5ý°åŒòðîïŁòàíŁŁ8íâ îòŒðßâàØòâ8äâåðöóıî°îäŁ°üíî ªî îòåå°åíŁÿ. Ýò
Łïó÷Łâ8Ł°Ł8ªàòŁòîäàìîßå5íàïŁòŒŁ. ´îäà,ðàæŁðÿÿæü,8ìîæåò5âçîðâàòü5Æóòß°Œó.¨æïî°üçîâàíŁå5ìîðîçŁ°üíî ªî îòåå°åí
îâðåòåà,8íâ˜Æîîâ Łîäâ8ä°ÿ5ıðàíåíŁÿ5ïðîäŒòîâ,8íâÆóäåò5äîæòŁªíóòà,8÷òî8æîŒðàòŁò âðåìÿ5ıðàíåíŁïðîäŒòîâ.

Лотки для льда

Ýòîò íîâßØ òŁï ôîðìî÷åŒ äºÿ ºåäÿíßı ŒóÆŁŒîâ çàïàòåíòîâàí ôŁðìîØ Merloni. ¨ı ðàæïîºîæåíŁå â âåðıíåØ ÷àæòŁ ÿøŁŒîâ ìîðîçŁºüíîØ Œàìåðß îÆåæïå÷Łâàåò Æîºüłóþ ýðªîíîìŁŒó Ł ÷Łæòîòó: ºåä íå æîïðŁŒàæàåòæÿ æ ïðîäóŒòàìŁ, ïîìåøåííßìŁ â ìîðîçŁºüíîå îòäåºåíŁå. `îºåå òîªî, ŁæŒºþ÷àåòæÿ ïðîºŁâ âîäß âî âðåìÿ çàïîºíåíŁÿ (ïîæºå çàïîºíåíŁÿ çàŒðîØòå ïðŁºàªàåìîØ Œðß łŒîØ).

Инструкции по использованию (–Łæ. 5)

˙àïîºíŁòå ºîòîŒ âîäîØ ÷åðåç æïåöŁàºüíîå îòâåðæòŁå äî óŒàçàííîªî óðîâíÿ (ÌÀÕ WATER LEVEL ìàŒæŁìàºüíßØ óðîâåíü âîäß), ïðåâßłåíŁå óðîâíÿ ìîæåò ïðŁâåæòŁ Œ òîìó, ÷òî Łçâºå÷åíŁå ºüäà Łç ôîðìß Æóäåò çàòðóäíåíî. ¯æºŁ ´ß âæå-òàŒŁ ïðåâßæŁºŁ ìàŒæŁìàºüíî äîïóæòŁìßØ óðîâåíü, ïîäîæäŁòå ïîŒà ºåä ðàæòàåò, îïîðîæíŁòå ôîðìó Ł çàïîºíŁòå åøå ðàç.

˘îæºå òîªî, ŒàŒ ´ß çàïîºíŁºŁ ôîðìó äî óŒàçàííîªî óðîâíÿ, ïîâåðíŁòå åå íà 90 ªðàäóæîâ. ˘î ïðŁíöŁïó æîîÆøàþøŁıæÿ æîæóäîâ âîäà çàïîºíÿåò ôîðìî÷ŒŁ, ïîæºå ÷åªî îòâåðæòŁå çàŒðßâàåòæÿ ïðîÆŒîØ, Ł ôîðìî÷ŒŁ ïîìåøàþòæÿ â æïåöŁàºüíîå ªíåçäî â ÿøŁŒå.

˚îªäà ºåä Æóäåò ªîòîâ, ïîæòó÷Łòå ôîðìîØ î òâåðäóþ ïîâåðıíîæòü, ÷òîÆß ŒóÆŁŒŁ ºüäà âßłºŁ Łç ôîðìîâî÷íßı ªíåçä, çàòåì âßòðÿæŁòå Łı ÷åðåç çàºŁâíîå îòâåðæòŁå. ˆîòîâßå ŒóÆŁŒŁ ºüäà Æóäåò ºåª÷å âßòðÿıíóòü, åæºŁ âß íàìî÷Łòå âíåłíþþ ïîâåðıíîæòü ôîðìß.

˘–¯˜Ó˘–¯˘ ˜¯˝¨¯: ŒàæäßØ ðàç ïåðåä ŁæïîºüçîâàíŁåì ôîðìß óÆåäŁòåæü, ÷òî îíà æîâåðłåííî ïóæòà Ł â íåØ íå îæòàºŁæü Œóæî÷ŒŁ ºüäà.

ÌŁíŁìàºüíîå âðåìÿ, íåîÆıîäŁìîå äºÿ ïðŁªîòîâºåíŁÿ ºüäà ïðŁìåðíî 8 ÷àæîâ.

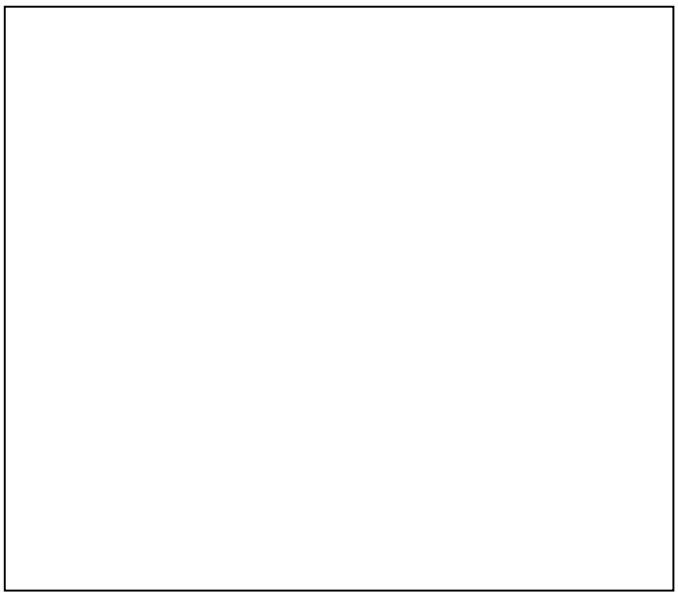

–Łæ. 5

МЯСО и РЫБА

Продукты	Упаковка	Время хранения до заморозки (дни)	Время хранения в морозильнике (месяцы)	Время и условия размораживания
Жареная говядина	алюминиевая фольга	2-3	9-10	не требуется
Баранина	алюминиевая фольга	1-2	6	не требуется
Жареная свинина	алюминиевая фольга	1	6	не требуется
Жареная телятина	алюминиевая фольга	1	8	не требуется
Телячьи / свиные отбивные	каждый кусок в полиэтилене, затем по 4-6 кусков в алюминиевой фольге		6	не требуется
Телячьи / бараньи котлеты	каждый кусок в полиэтилене, затем по 4-6 кусков в алюминиевой фольге		6	не требуется
Мясной фарш	алюминиевые поддоны, закрываемые пленкой	Свежепро-молотый	2	медленно в холодильнике
Сердце, потроха	полиэтиленовые пакеты		3	не требуется
Колбасы, сосиски	пищевая пленка или алюминиевая фольга		2	по необходимости
Курица и индейка	алюминиевая фольга	1-3	9	очень медленно в холодильнике
Гусь и утка	алюминиевая фольга	1-4	6	очень медленно в холодильнике
Фазан, куропатка и дикая утка	алюминиевая фольга	1-3	9	очень медленно в холодильнике
Зайчатина и крольчатина	алюминиевая фольга	3-4	6	очень медленно в холодильнике
Оленина	алюминиевая фольга или пищевая пленка	5-6	9	очень медленно в холодильнике
Крупная рыба	алюминиевая фольга или пищевая пленка		4-6	очень медленно в холодильнике
Мелкая рыба	полиэтиленовые пакеты		2-3	не требуется
Крабы, раки	полиэтиленовые пакеты		3-6	не требуется
Устрицы, молюски	залитые соленой водой в алюминиевых поддонах или пластиковых контейнерах		3	очень медленно в холодильнике
Вареная рыба	алюминиевая фольга или пищевая пленка		12	в горячей воде
Жареная рыба	полиэтиленовые пакеты		4-6	прямо на сковороде

ФРУКТЫ и ОВОЩИ

Продукты	Приготовление	Время бланши-ровки (мин)	Упаковка	Время хранения (месяцы)	Время и условия размораживания
Яблоки и груши	почистить и порезать кусочками	2	в контейнерах (залить сиропом)	12	в холодильнике очень медленно
Абрикосы, персики, вишня и сливы	промыть и вынуть косточки	1 -2	в контейнерах (засыпать сахаром)	12	в холодильнике очень медленно
Клубника, ежевика, малина	промыть и высушить		в контейнерах (засыпать сахаром)	10-12	в холодильнике очень медленно)
Печеные фрукты	порезать и приготовить		в контейнерах добавить 10% сахара	12	в холодильнике очень медленно)
Фруктовые соки	помыть, порезать и выжать сок		в контейнерах сахар по вкусу	10-12	в холодильнике очень медленно)
Цветная капуста	снять листья, порезать на мелкие кусочки и бланшировать в воде с небольши				

Обслуживание и уход

Перед выполнением любых операций по мойке и обслуживанию отсоедините холодильник от электросети.

Размораживание

Внимание: íåŁæïîºüçóØòåäºÿ óæŒîðåíŁÿ ïðîöåææà ðàçìîðæŁâàíŁÿ ïðåäìåòß, Œîòîðßå ìîªóò ïîöàðàïàòü æòåíŒ ıîºîäŁºüíŁŒà ŁºŁ íàðółŁòü ªåðìåòŁ÷íîæòü ıîºîäŁºüíîØŒàìåßð.

Размораживание холодильного отделения

ÕîºîäŁºüíîå îòäåºåíŁå ðàçìîðàæŁâàåòæÿ àâòîìàòŁ÷åæŒŁ; îÆðàçóþøàÿæÿ âîäà ïîæòïàåò â äðåíàæíóþ æŁæòåìó (*рис.6*), çàòåì Łæïàðÿåòæÿ òåïºî ì Œîìïðåææîðà. ¯äŁíæòâåíîíå, ÷òî ´àì íåîÆıîäŁìîäåºàòü äºÿ îÆæóæŁâàíŁÿ ıîºîäŁºüíîªî îòåºåíŁÿ æºåäŁòü, ÷òîÆß äðåíàæíîå îòâåðæòŁå, Œîòîðîå íàıîäŁòæÿ çàÿøŁŒîì äºÿ îâîøåØŁ ôðóŒòîâ, íå Æßºî çàæîðåíî.

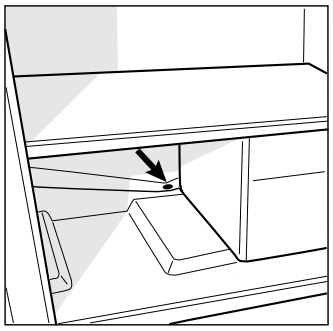

Рис. 7

Размораживание морозильного отделения

Ñî âðåìåíåì íà âíóòðåíıŁı æòåŒàı ìîðîçŁºüíîªî îòäåºåíŁÿ íàðàæòâåòŁíåØ, ŒîòîðßØ æºåäóåò óäàºÿòü æïåòŁàºüíßì ïºàæòìàæîâßì æŒðåŒîì, ïîæòâºÿåíßì âìåæîæıîºîäŁºüíŁŒîì. ˇðŁòîºøŁíåŁíåÿ Æîºåå 5 ìì æºåäóåò ðàçìîðîçŁòü ìîðîçŁºüíîå îòäåºåíŁå. ˇîæòàüòå ðóŒîÿòŒóòåðìîæòàòà **J** â ïîºîæåíŁå «**0**» (*рис.7*).

´à âðåìÿ ðàçìîðàæŁâàíŁÿ çàâðíŁòå çàìîðîæåííßå ïðîäóŒòß â íæŒîºüŒî æºîâà ªàçåòŁ ïîìæòŁåå, ïî âîçìîæíîæòŁ, â ıîºîäíîå ìæòè. ¸æòàâüòå äâåðü îŒßòîØ äºÿ òîªî, ÷òîÆß ŁíåØ ðàæòàÿº Æßæòðåå, äºÿ óæŒîðåíŁÿ ðàçìîðàæŁâàíŁÿ ïîìæòŁåå â ìîðîçŁºüíŁŒàæòðºþ æòåïºîâîâØ. ÕîºîäŁºüíŁŒ Łìåò äðåíàæíóþ æŁæòåìó, ïîæòàâüòå ïîäıîäÿøóþ àìŒîæòü, ŒàŒ ïîŒàçàíî íà *рис. 8*.

´ßìîØåŁ òøàòåºüíî âßæółŁòå Œàìåß ïåðåä ïîâòîðíßì âŒº÷åíŁåì.

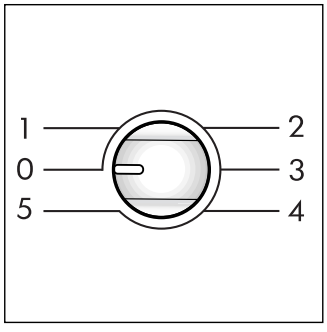

Рис. 7

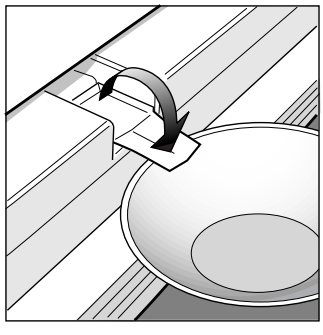

Рис. 8

Обслуживание и уход

• ´àł ıîºîäŁºüíŁŒ Łçªîòîâºåí Łç íå ïàıíóøŁı ªŁªŁåíŁ÷åæŒŁı ìàòåðŁàºîâ. ˜ºÿ æîıðàíåíŁÿ ýòŁı ıàðàŒòåðŁæòŁŒ, âæåªäà ıðàíŁòå æŁºüíî ïàıíóøŁå ïðîäŒòßß â ïºîòíî çàŒßßâàþøŁıæÿ ŒîíòåØíåðàı ÷òîÆß ŁçÆåæàòü ÎÆðàçîâàíŁÿ çàïàıîâ, Œîòîðßå ïîòî Æóäåò æºîæíî óäàŁòü.

• ´íóòðåííŁå Łâíåł íŁå ïîâåðıíîæòŁ ıîºîäŁºüíŁŒà ìîØòå ªóÆŒîØ ŁºŁ ìÿªŒîØ òŒàíüþ, æì î÷ííîØ â ðàæòâîðå ïŁøåâîØ æîäß â òåïºîØ âîää (æîäà òàŒæå ÿâºÿåòæÿ ıîðł ì äåçŁíôåŒòîðî ì). ˇðŁ îòæóòæòâŁŁ ïŁøåâîØ æîäß Łæïî ºüçóØòå íåØòðàºüíîå ì îþøåå æðåäæòâî.

• ˝ŁŒîªää íå Łæïî ºüçóØòå îðªàíŁ÷åæŒŁå ðàæòâîðŁòºŁ, àÆðàçŁâíßå, ıºîðï- Ł àì ìŁàŒîæıäåðæøŁå âåøåæòâà.

• ´æå æŒåì íßå÷àæòŁ ì îæíî ì ßòü â ðàæòâîðî ì ßºà ŁºŁ ì îþøåªî æðåäæòâà â âîäå. ÒàŒæå Łı ì îæíî ì ßòü â ïîæóäî ì îå÷íîØ ìà łŁíå. ˇî ì íŁòå, ÷òî âæå æŒåì íßå ÷àæòŁ íåîÆıîäŁì î øàòåºüíî âßæółŁòü ïðåä òåì, ŒàŒ ïîæòàâŁòü Łı îÆðàòíî â ıîºîäŁºüíŁŒ.

• ˇßºü ì îæåò æŒàïºŁâàòüæÿ íà çàäíåØ ïàíåºŁ ıîºîäŁºüíŁŒàŁ ïðåïÿòæòâîâàòü åªî íîðìàºüíîØ ðàÆîòå. ˇðîïßºåæîæüòå çàäíþþ æòåíŒó ıîºîäŁºüíŁŒà îæòîðîæíî, Łæïî ºüçóÿ ïîäıîäÿøŁå íàæàäŒŁ.

• ¯æºŁ âß íåæÍŁðàåòåæü Łæïî ºüçîâàòü ıîºîäŁºüíŁŒ ïðîäîºòåºüíîå âðåìÿ, âßìîØòå åªî Łçíóòð, âßæółŁòå Ł îæòàâüòå äåðü ïðŁòŒßòîØ, ÷òîÆß ŁçÆåæàòü îÆðàçîâàíŁÿ íåïðŁòíîªî çàïàıà Ł ïºåæåíŁ.

Замена лампы освещения

(данная процедура не является гарантийным ремонтом).

¸òŒºþ÷Łòå ıîºîäŁºüíŁŒ îò æåòŁ, âßíóâ âŁºŒóŁz ðîçåòŒŁ. ´ßåðíŁòå ºàì ïó Ł çàìåíŁòå åå àíàºîªŁ÷íîØ (ìîøíîæòüþ íå Æîºåå 15 ´ò). ˜ºÿ äîæòóïàŒºàì "**A**", îòâåðíŁòå öåíòðàºüíßØ âŁíò "**B**" íà çääíåØ ÷àæòŁ ïºâîíà, ŒàŒ ïîŒàçàíî íà –Łæ. 9.

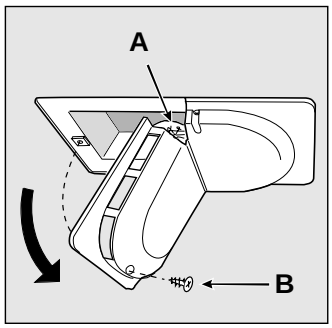

–Łæ. 9

Устранение неисправностей

´ æºó÷àå íåóäîâºåòâîðŁòåºüíîØ ðàÆîòß ıîºîäŁºüíŁŒà ŁºŁ âîçíŁŒíîâåíŁÿ íåŁæïðàâíîæòåØ ïðî÷ŁòàØòå ýòîò ðàçäåº, ïðåæäå ÷åì âßçßâàòü òåıíŁŒîâ. ´ Æîºü ł Łíæòâå æºó÷àå ´ß ì îæåòå ðå ł Łòü âîçíŁŒ ł Łå ïðîÆºåìß æàìŁ.

Холодильник не работает

Проверьте:

- â äîìå íå îòŒºþ÷åíî ýºåŒòðŁ÷åæòâî;
- âŁºŒà íàäåæíî âæòàâºåíà â ðîçåòŒó;
- ðîçåòŒà Łæïðàâíà; äºÿ ïðîâåðŒŁ ïîäŒºþ÷Łòå óæòðîØæòâî, â ŁæïðàâíîæòŁ Œîòîðîªî ´ß óâåðåíß;
- ïîïðîÆóØòå ïîäŒºþ÷Łòüæÿ Œ äðóªîØ ðîçåòŒå.

Температура в отделениях холодильника слишком высокая

Проверьте:

- äâåðöß îòäåºåíŁØ çàŒðßòß ïºîòíî, óïºîòíåíŁÿ íà äâåðöàı íå ïîâðåæäåíß;
- òåðìîæòàò íàıîäŁòæÿ â ïðàâŁºüíîì ïîºîæåíŁŁ;
- îòäåºåíŁÿ íå ïåðåïîºíåíß ïðîäóŒòàìŁ;
- äâåðü îòäåºåíŁÿ íå îòŒðßâàºŁ ÷àæòî.

Продукты в холодильном отделении переохлаждаются

Проверьте:

- òåðìîæòàò íàıîäŁòæÿ â ïðàâŁºüíîì ïîºîæåíŁŁ;
- ïðîäóŒòß íå Œàæàþòæÿ çàäíåØ ÷àæòŁ ıîºîäŁºüíŁŒà îíà î÷åíü ıîºîäíàÿ.

Постоянно работает компрессор

Проверьте:

- äâåðöß ıîºîäŁºüíŁŒà ïºîòíî çàŒðßâàþòæÿ Ł îòŒðßâàþòæÿ íå æºŁ ł Œîì ÷àæòî;
- òåìïåðàòóðà â ïîìåøåíŁŁ íå æºŁ ł Œîì âßæîŒàÿ;
- òåðìîæòàò íàıîäŁòæÿ â ïðàâŁºüíîì ïîºîæåíŁŁ.

Холодильник слишком шумит при работе

Проверьте:

Õºàäàªåíò, öŁðŒóºŁðóþøŁØ âíóòðŁ æŁæòåìß îıºàæäåíŁÿ, ìîæåò íåªðîìŒî ÆóºüŒàòü, äàæå åæºŁ Œîìïðåææîð íå ðàÆîòàåò. ˝å ÆåæïîŒîØòåæü, ýòî æîâåðłåííî íîðìàºüíî.

- ÕîºîäŁºüíŁŒ âßðîâíåí.
- ÕîºîäŁºüíŁŒ íå Œàæàåòæÿ ïîæòîÿííî âŁÆðŁðóþøŁı ïîæòîðîííŁı ïðåäìåòîâ (íàïðŁìåð, îŒðóæàþøåØ ìåÆåºŁ).

В холодильном отделении скапливается вода

Проверьте

- ˜ðåíàæíîå îòâåðæòŁå íå çàæîðåíî (æì. *рис. 6*.

¯æºŁ ïîæºå ïðîâåðŒŁ ıîºîäŁºüíŁŒ íå ðàÆîòàåò, ŁºŁ ïðîÆºåìß îæòàþòæÿ, æâÿæŁòåæü æ æåðâŁæíßì öåíòðîì Ł ïðŁ çâîíŒå æîîÆøŁòå æºåäóþøóþ ŁíôîðìàöŁþ: íîìåð ªàðàíòŁØíîªî äîŒóìåíòà (æåðâŁæíîØ ŒíŁæŒŁ, æåðâŁæíîªî æåðòŁôŁŒàòà Ł ò.ï.), íåŁæïðàâíîæòü, ìîäåºü (Mod.), æåðŁØíßØ íîìåð (S/N), îÆîçíà÷åííßå íà ŁíôîðìàöŁîííîØ òàÆºŁ÷Œå, ðàæïîºîæåííîØ æºåâà çà ÿøŁŒîì äºÿ îâîøåØ Ł ôðóŒòîâ (æì. ïðŁìåðß íà *рис.* íŁæå).

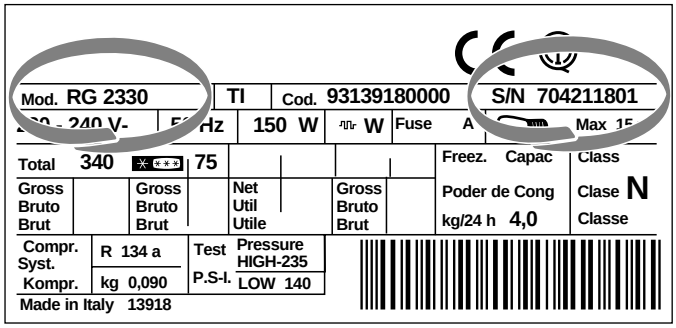

- **Не пользуйтесь услугами лиц, не уполномоченных производителем.**
- **При ремонте требуйте использования оригинальных запасных частей.**

Merloni Elettrodomestici spa

Срок службы

10 лет

со дня изготовления

ARISTON INDESIT

Производитель оставляет за собой право без предупреждения вносить изменения в конструкцию и комплектацию, не ухудшающие эффективность работы оборудования. Некоторые параметры, приведенные в этой инструкции, являются приблизительными. Производитель не несет ответственности за незначительные отклонения от указанных величин.

Merloni Elettrodomestici spa

Via Aristide Merloni, 47
60044 Fabriano (AN) Italj
tel. +39 0732 6611
www.merloni,com

05/2003 - 195038733.00 - Xerox Business Services DocuTech