fridgemaster

How to use your new Fridge Freezer

Model MBC55224FE

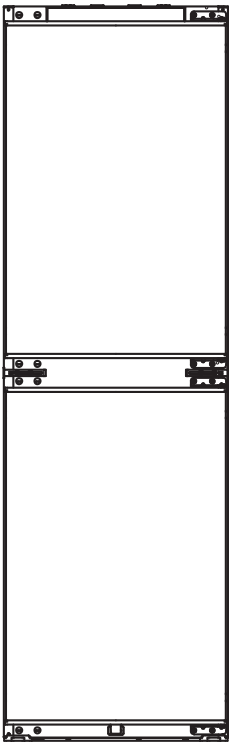

Contents

Safety and warning information_ _ _ _ _ _ 2
Description of the appliance _ _ _ _ _ _ _ _ 9
Electronic control_ _ _ _ _ _ _ _ _ _ _ _ _ 9
First use and installation_ _ _ _ _ _ _ _ _ 11
Daily use _ _ _ _ _ _ _ _ _ _ _ _ _ _ _ _ _ 13
Helpful hints and tips _ _ _ _ _ _ _ _ _ _ _ 14
Cleaning and care _ _ _ _ _ _ _ _ _ _ _ _ _ 15
Troubleshooting_ _ _ _ _ _ _ _ _ _ _ _ _ _ 16
Reverse the door_ _ _ _ _ _ _ _ _ _ _ _ _ 18
Disposal of the appliance_ _ _ _ _ _ _ _ _ 19

Safety and warning information

For your safety and correct usage, before installing and first using the appliance, read this user manual carefully, including its hints and warnings. To avoid unnecessary mistakes and accidents, it is important to make sure that all people using the appliance are thoroughly familiar with its operation and safety features. Save these instructions and be sure that they remain with the appliance if it is moved or sold, so that anyone using it throughout its life, will be properly informed on its usage and safety notices.
For the safety of life and property, keep the precautions of these user's instructions as the manufacturer is not responsible for damages caused by omission.

Safety for children and otherswho are vulnerable people

- According to EN standard
  This appliance can be used by children aged from 8 years and above and persons with reduced physical, sensory or mental capabilities or lack of experience and knowledge if they have been given supervision or instruction concerning use of the appliance in a safe way and understand the hazards involved. Children shall not play with the appliance. Cleaning and user maintenance shall not be made by children without supervision.
  According to IEC standard
  This appliance is not intended for use by persons (including children) with reduced physical, sensory or mental capabilities, or lack of experience and knowledge, unless they have been given supervision or instruction concerning use of the appliance by a person responsible for their safety.

- Keep all packaging away from children as there is risk of suffocation.
- If you are discarding the appliance, pull the plug out of the socket, cut the connection cable (as close to the appliance as you can) and remove the door to prevent children playing from suffering an electric shock or from closing themselves inside it.
- If this appliance, featuring a magnetic door seals, is to replace an older appliance having a spring lock (latch) on the door or lid, be sure to make the spring lock unusable before you discard the old appliance. This will prevent it from becoming a death trap for a child.

General safety



- WARNING —This appliance is intended to be used in household and similar applications such as
  -staff kitchen areas in shops, offices and other working environments;
  -farm houses and by clients in hotels, motels and other residential type environments;
  -bed and breakfast type environments;
  -catering and similar non-retail applications.
- WARNING — Do not store explosive substances such as aerosol cans with a flammable propellant in this appliance.
- WARNING — If the supply cord is damaged, it must be replaced by the manufacturer, its service agent or similarly qualified persons in order to avoid a hazard.
- WARNING — Keep ventilation openings, in the appliance enclosure or in the built-in structure, clear of obstruction.
- WARNING — Do not use mechanical devices or other means to accelerate the defrosting process, other than those recommended by the manufacturer.
- WARNING — Do not damage the refrigerant circuit.
- WARNING — Do not use electrical appliances inside the food storage compartments of the appliance, unless they are of the type recommended by the manufacturer.

- WARNING — The refrigerant and insulation blowing gas are flammable. When disposing of the appliance, do so only at an authorized waste disposal centre. Do not expose to flame.
- WARNING —When positioning the appliance, ensure the supply cord is not trapped or damaged.
- WARNING —Do not locate multiple portable socket-outlets or portable power supplies at the rear of the appliance.
- WARNING — To avoid a hazard due to instability of the appliance, it must be fixed in accordance with the instructions.

Replacing the illuminating lamps

- WARNING—The illuminating lamps must not be replaced by the user! If the illuminating lamps is damaged, contact the customer helpline for assistance.

This warning is only for refrigerators that contain illuminating lamps.

Refrigerant

The refrigerant isobutene (R600a) is contained within the refrigerant circuit of the appliance, a natural gas with a high level of environmental compatibility, which is nevertheless flammable. During transportation and installation of the appliance, ensure that none of the components of the refrigerant circuit becomes damaged.
The refrigerant (R600a) is flammable.

- WARNING — Refrigerators contain refrigerant andgases in the insulation. Refrigerant and gases must be disposed of professionally as they may cause eye injuries or ignition. Ensure that tubing of the refrigerant circuit is not damage prior to proper disposal.



WARNING:Risk of fire / flammable materials

If the refrigerant circuit should be damaged:
-Avoid opening flames and sources of ignition.
-Thoroughly ventilate the room in which the appliance is situated.

It is dangerous to alter the specifications or modify this product in any way.
Any damage to the cord may cause a shortcircuit, fire, and/or electric shock.

Electrical safety

1.The power cord must not be lengthened.
2. Make sure that the power plug is not crushed or damaged. A crushed or damaged power plug may overheat and cause a fire.
3. Make sure that you can access the main plug of the appliance.
4. Do not pull the main cable.
5. If the power plug socket is loose, do not insert the power plug. There is a risk of electric shock or fire.
6.You must not operate the appliance without the interior lighting lamp cover.
7.The fridge is only applied with power supply of single phase alternating current of 220~240V/50Hz. If fluctuation of voltage in the district of user is so large that the voltage exceeds the above scope, for safety sake, be sure to apply A.C. Automatic voltage regulator of more than 350W to the fridge. The fridge must employ a special power socket instead of common one with other electric appliances. Its plug must match the socket with ground wire.

Daily use

- Do not store flammable gass or liquids in the appliance, There is a risk of an explosion.
- Do not operate any electrical appliances in the appliance (e.g.electric ice cream makers,mixers etc.).
- When unplugging always pull the plug from the mains socket,do not pull on the cable.
- Do not place hot items near the plastic components of this appliance.

- Do not place food products directly against the air outlet on the rear wall.
- Store pre-packed frozen food in accordance with the frozen food manufacture's instructions.
- The appliances manufactures storage recommendations should be strictly adhered to.Refer to relrelevant instructions for storage.
- Do not place carbonated or fizzy drinks in the freeze compartment as it creates pressure on the container,which may cause it to explode,resulting in damage to the appliance.
- Frozen food can cause frost burns if consumed straight from the freezer compartment.
- Do not place the appliance in direct sunlight.
- Keep buring candles,lamps and other items with naked flames away from the appliance so that do not set the appliance on fire.
- The appliance is intended for keeping food stuff and/or beverages in normal household as explained in this instruction booklet The appliance is heavy.Care should be taken when moving it.
- Do not remove nor touch items from the freezer compartment if your hands are damp/wet,as this could cause skin abrasions or frost/freezer burns.
- Never use the base,drawers, doors etc. to stand on or as supports.
- Frozen food must not be refrozen once it has been thawed out.
- Do not consume ice popsicles or ice cubes straight from the freezer as this can cause freezer burn to the mouth and lips.
- To avoid items falling and causing injury or damage to the appliance, do not overload the door racks or put too much food in the crisper drawers.
- Never cover or obstruct the ventilation slats on the appliance.

caution!
Care and cleaning

- Before maintenance, switch off the appliance and disconnect the mains plug from the mains socket.
- Do not clean the appliance with metal objects, steam cleaner, ethereal oils, organic solvents or abrasive cleansers.
- Do not use sharp objects to remove frost from the appliance. Use a plastic scraper.

Installation Important!

- For electrical connection carefully, follow the instructions given in this manual.
  Unpack the appliance and check if there are damages on it.
- Do not connect the appliance if it is damaged. Report possible damages immediately to the place you bought it. In this case retain packing.
- It is advisable to wait at least four hours before connecting the appliance to allow the oil to flow back in the compressor.
- Adequate air circulation should be around the appliance, lacking this leads to overheating. To achieve sufficient ventilation, follow the instructions relevant to installation.
- Wherever possible the back of the product should not be too close to a wall to avoid touching or catching warm parts (compressor, condenser) to prevent the risk of a fire, follow the instructions relevant to installation.
- The appliance must not be locate close to radiators or cookers.
- Make sure that the mains plug is accessible after the installation of the appliance.

Service

- Any electrical work required to do the servicing of the appliance should be carried out by qualified electrician or competent person.
- This product must be serviced by an authorized Service Center, and only genuine spare parts must be used.
  1)If the appliance is Frost Free.
  2)If the appliance contains freezer compartment.

In case of malfunction

If a malfunction occurs on the appliance, please look first in the “Trouble shooting” section of these instructions. If the information given there does not help, please do not perform any further repairs yourself.
Under no circumstance should you attempt to repair the appliance yourself. Repairs carried out by inexperienced persons may cause injury or serious malfunctioning.

Remove transport packaging

The appliance and the interior fittings are protected for transportation. Pull off the adhesive tape on the left and right side of the door. You can remove any remnants of adhesive using white spirit. Remove all adhesive tape and packing pieces from the interior of the appliance.

Note: Children aged from 3 to 8 years are allowed to load and unload refrigerating appliances.(This clause applies only to the EU region.)

Description of the appliance

View of the appliance

1. Electronic control
2. Storage shelves
3. Bottle rack
4. Vegetable drawer cover
5. Vegetable drawer
6. Freezer drawers
7. Freezer glass
8. Upper rack
9. Middle rack
10. Lower rack

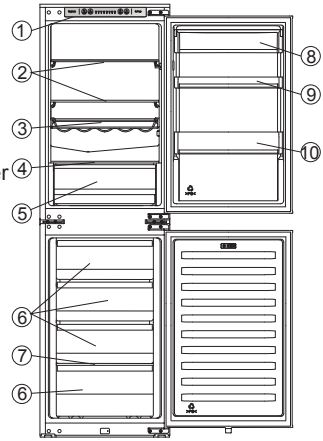

Note: Due to constant modification of our products, your refrigerator may be slightly different from this Instruction Manual, but its functions and using methods remain the same.

Note: To get the best energy efficiency of this product, please place all shelves, drawers and baskets on their original position as the illustration above.

Electronic Control

All functions and controls of the unit are accessible from a control panel conveniently located on the roof of the cabinet. A display circuit board allows easy configuration of features and settings in a simple and intuitive manner.

Important!

When the refrigerator is energized, all the pilot lights will turn on for 3 sec and you will also heard a long sound of “beep”. The display board consists of four buttons and eight pilot lights. You will heard a short sound of “beep” when you press the buttons.

Controlling the temperature

To ensure the normal operation of the refrigerator, we recommend that when you start your refrigerator for the first time, the temperature for the refrigerator is set to 5℃.

However, the exact setting should be chosen keeping in mind that the temperature inside the appliance depends on:

- room temperature
- how often the door is opened
- quantity of food stored
- appliance location



Electronic Control (located at the top of appliance)

1. Temp

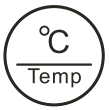

Press “Temp” button to set fridge temperature between 8℃ and 2℃ as needed, and the light of the comparable temperature will be lighten corresponding values according to the following sequence.



Note!

Settings may be made from 2 to 8. You will obtain a colder fridge temperature and a lower freezer temperature by adjusting “Temp” towards 2 position:

Coldest setting: 2℃.

Warmest setting: 8℃.

● For optimum food preservation, a medium setting is generally the most suitable.

Note:High temperature setting will accelerate food waste.

2. Super Cool



To freeze fresh food activate the Super Cool function at least 24 hours before placing the food to complete prefreezing.

● The Super Cool is used to perform perfreezing and fast freezing in sequence of Fresh food and Freezer compartments. This function accelerates the freezing of freshfood and, at the same time, protects foodstuffs already stored from undesirable warming.

● Press “Super Cool” button to activate the super cool function. The Super icon will light up and the fridge temperature indicator will display 2℃.

Super cool automatically switches off after 52 hours.

● When super cool function is on, you can switch off super cool function by pressing “Super Cool” or “Temp” button, then the fridge temperature setting or function mode will revert back to the previous setting.

3. Alarm



In case of alarm, “Alarm” icon will light up and a buzzing sound will start.

Press “Alarm” button to stop alarm and buzzing then “Alarm” icon will turn off.

Door Alarm

The alarm light on and a buzzing sound indicate abnormal conditions, such as accidentally a door left open.

● Leaving the door of refrigerator open for over 2 minutes will activate a door alarm and buzzer. The buzzer will beep 3 times per minute for 10 minutes. Closing the door cancels the door alarm and buzzer.

● To save energy, please avoid keeping the door open for a long time when using refrigerator.

4. Power



If you want to stop using it, you can turn the appliance off by pressing “Power” button.

● When the refrigerator is working, you can switch the appliance off by pressing “Power” button for above 3 seconds, meanwhile the display panel will be turned off.

Important !Do not store any food in the fridge during this time. If you will not use the refrigerator for a long time, please pull the plug.

● When the appliance is power off, you can switch the appliance on by pressing “Power” button for 1 second, and the refrigerator returns to previous temperature setting.

First use and installation

Built-In Fridge Freezer

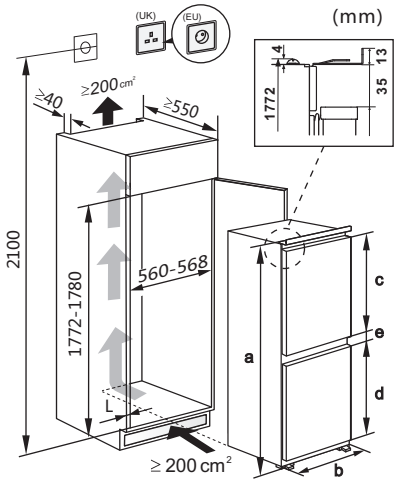

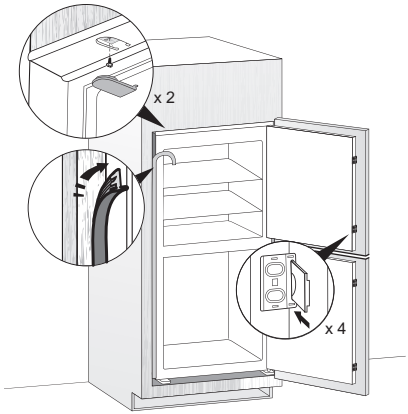

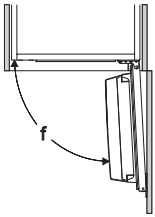

	Technical characteristics
a	Height
b	Width
c	Refrigerator door height
d	Freezer door height
e	Profundity
f	Door-opening angle

Parameters of appliance	a	b	c	d	e	f
RIB291	1772	540	811	811	71	≦95°

Note: Your product is designed and built for domestic household use only. The product must be correctly installed, located and operated in accordance with the instructions contained in the User Instructions provided.

Note: Parameters provided in table are design parameters. Because of the various reasons, there will be a slight deviation between actual dimension and design parameter. The data listed are only for reference.

Cleaning before use

- Before using the appliance for the first time, wash the interior and all internal accessories with lukewarm water and neutral soap in order to remove the typical smell of a brand new product, then dry thoroughly.

Installation Positioning

Warning! Before installing, read the instructions carefully for your safety and the correct operation of the appliance.

- Position the appliance away from sources of heat such as stoves, radiators, direct sunlight, etc.
- Maximum performance and safety are guaranteed by maintaining the correct indoor temperature for the class of unit concerned, as specified on the rating plate.
- The appliance performs well within the climate class from N to ST showed in the tale below.
  It may not work properly if left at a temperature above or below the indicated range for a long period.

Important! It is necessary to have good ventilation around the refrigerator to allow for the dissipation of heat, high efficiency, and low power consumption. For this reason, sufficiently cleared space should be available around the refrigerator.

Climate class	Ambient temperature
SN	+10°C to +32°C
N	+16°C to +32°C
ST	+16°C to +38°C
T	+16°C to +43°C

Leveling

- The appliance should be level in order to eliminate vibration. To make the appliance level, it should be upright and adjusters should be in stable contact with the floor. Also adjust the level by unscrewing the appropriate level adjustment in the front (use your fingers or a suitable spanner).

Electrical connection

Caution! Any electrical work required to install the appliance should be carried out by a qualified or authorized person.

W arning!This appliance must be grounded. The manufacturer declines any liability should these safety measures not be observed.

Daily use

Accessories 1)

Movable shelves/trays

- Various glass, plastic storage shelves or wire trays are included with your appliance. Different models have different combinations and different models have different features.
- The walls of the refrigerator are equipped with a series of runners so that the shelves can be positioned as desired.

Positioning the door racks

- To permit the storage of food packages of various sizes, the door racks can be placed at different heights.
- To adjust, gradually pull the rack in the direction of the arrows until it comes free, then reposition as required.

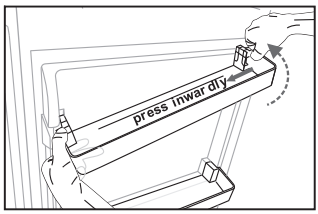

Remove the door rack

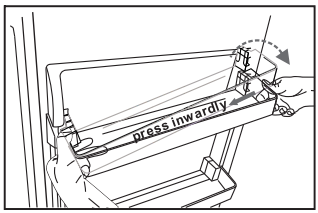

Install the door rack

Vegetable Drawer

- For storing fruit and vegetables.

Freezer Drawer

- For storing frozen food.

Ice-cube tray

- For making ice and storing ice-cubes.

Refrigerator compartment 2)

- For storing food that does not need to be frozen and different sections suitable for different kinds of food.

Freezer food compartment 2)

- For freezing fresh food and storing frozen and deep-frozen food for long periods of time.

Thawing food 2)

- In the refrigerator compartment.
- At room temperature.
- In a microwave oven.
- In a conventional or convection oven.
- Food once thawed should be re-frozen with the exception of special cases.

1) If the appliance contains related accessories and functions.
2) If the appliance contains a freezer compartment.

Helpful hints and tips

Noises during operation

Clicks- Whenever the compressor switches on or off, a click can be heard.
Humming- As soon as the compressor is in operation, you can hear it humming.
Bubbling- When refrigerant flows into thin tubes, you can hear bubbling or splashing noises.
Splashing- Even after the compressor has been switched off, this noise can be heard for a short time.

Energy saving tips

- Do not install the appliance near stoves, radiators or other sources of warmth.
- Keep the time the appliance is open to a minimum.
- Do not set the temperature colder than necessary.
- Make sure the side plates and back plate of the appliance are at some distance from the wall, and follow the instructions relevant to installation.
- If the diagram shows the correct combination for the drawers, crisper and shelves, do not adjust the combination as it would produce an effect on energy consumption.

Hints for fresh food refrigeration

- Do not store warm foods or evaporating liquids in the appliance.
- Do cover or wrap the food, particularly if it has a strong flavor or odor.
- Position food so that air can circulate freely around it.

Hints for refrigeration

- Meat (all types): wrap in polyethylene (plastic) bags and place on the glass shelf above the vegetable drawer. For safety, store in this way only one or two days at the most.
- Cooked foods, cold dishes, etc…: these should be covered and may be placed on any shelf.
- Fruit and vegetables: these should be thoroughly cleaned and placed in the special drawer provided.
- Butter and cheese:these should be placed in aluminum foil or polyethylene (plastic) bags while removing as much air as possible.
- Milk bottles: these should have a cap and should be stored in the bottle rack on the door.

Hints for freezing

- When first starting-up or after a period out of use. Before putting the food in the compartment, let the appliance run at 2 hours on the higher settings.
- Prepare food in small portions to enable it to be rapidly and completely frozen and to make it possible to subsequently thaw only the quantity required.
- Wrap up the food in aluminum foil or polyethylene (plastic) and make sure that the packages are airtight.
- Do not allow fresh, unfrozen food to touch food that is already frozen, thus avoiding a rise in the temperature of the latter.
- Iced products, if consumed immediately after removal from the freezer compartment, can possibly cause skin to become freezer burnt.
- It is recommended to label and date each frozen package in order to keep track of the storage time.

Hints for the storage of frozen food

- Ensure that frozen food has been stored correctly by the food retailer.
- Once defrosted, foods deteriorate rapidly and can not be re-frozen.
- Do not exceed the storage period indicated by the food manufacturer.

  Note: If the appliance contains related accessories and functions.

Switching off your appliance

- Empty the appliance.
- Pull out the power plug.
- Clean and dry the interior thoroughly.
- Ensure that all doors are wedged open slightly to allow air to circulate.

5.This product contains a light source of energy efficiency class <G>

Cleaning and Care

Cleaning and care

For hygienic reasons, the appliance (the including exterior and interior accessories) should be cleaned regularly at least every two months.

Warning! Danger of electrical shock!

- The appliance must not be connected to the main power supply during cleaning. Before cleaning, switch the appliance off and remove the plug from the main power supply, or shut off the circuit breaker or fuse.

Exterior cleaning

To maintain good appearance of your appliance, you should clean it regularly.

- Wipe the digital panel and display panel with a clean, soft cloth.
- Spray water onto the cleaning cloth instead of spraying directly on the surface of the appliance. This helps ensure an even distribution of moisture to the surface.
- Clean the doors and cabinet surfaces with a mild detergent and then wiped dry with a soft cloth.

Caution!

- Don't use sharp objects as they are likely to scratch the surface.
- Don't use Thinner, Car detergent, Clorox, ethereal oil, abrasive cleansers or organic solvent such as Benzene for cleaning. They may damage the surface of the appliance and may cause fire.

Interior cleaning

- You should clean the appliance interior regularly. It will be easier to clean when food stocks are low. Wipe the inside of the fridge freezer with a weak solution of bicarbonate of soda, and then rinse with warm water using a wrung-out sponge or cloth. Wipe completely dry before replacing the shelves and baskets.
  Thoroughly dry all surface and removable parts
- Although this appliance automatically defrosts, a layer of frost may occur on the freezer compartment's interior walls if the freezer door is opened frequently or kept open too long. If the frost is too thick, choose a time when the supply of food stocks are low and proceed as follows:
- Remove existing food and accessories baskets, unplug the appliance from the mains power and leave the doors open Ventilate the room thoroughly to accelerate the thawing process.
- When defrosting is completed, clean your freezer as described above.

Caution!

Don't use sharp objects to remove frost from the freezer compartment. Only after the interior is completely dry should the appliance be switched back on and plug. back into the mains socket.

Defrosting

A) Fridge compartment

- This compartment defrosts automatically. The defrosting water runs to the drain tube via a collection container at the back of the appliance.

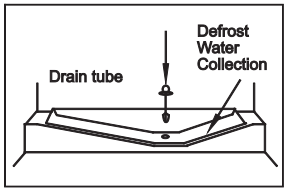

B) Freezer compartment

- This compartment defrosts automatically.

Door seals cleaning

- Take care to keep door seals clean. Sticky food and drinks can cause seals to the cabinet and tear when you open the door. Wash seal with a mild detergent and warm water. Rinse and dry it thoroughly after cleaning.

Caution!

Only after the door seals are completely dry should the appliance be powered on.

Replacing the LED light

- Warning: The LED light must not be replaced by the user! If damaged, contact the customer helpline for assistance. To replace the LED light, the below steps can be followed:

1. Unplug your appliance.
2. Remove light cover by pushing up and out.
3. Hold the LED cover with one hand and pull it with the other hand while pressing the connector latch.
4. Replace LED light and snap it correctly in place.
5.This product contains a light source of energy efficiency class G.

Troubleshooting

If you experience a problem with your appliance or are concerned that the appliance is not functioning correctly, you can carry out some easy checks before calling for service, please see below.

Warning! Don't try to repair the appliance yourself. If the problem persists after you have made the checks mentioned below, contact a qualified electrician, authorized service engineer or the shop where you purchased the product.

Problem	Possible cause & Solution
Appliance is not working correctly	Check whether the power cord is plugged into the power outlet properly.
	Check the fuse or circuit of your power supply, replace if necessary.
	The ambient temperature is too low. Try setting the chamber temperature to a colder level to solve this problem.
	It is normal that the freezer is not operating during the automatic defrost cycle, or for a short time after the appliance is switched on to protect the compressor.
Odours from the compartments	The interior may need to be cleaned
	Some food, containers or wrapping cause odours.
Noise from the appliance	The sounds below are quite normal: •Compressor running noises. •Air movement noise from the small fan motor in the freezer compartment or other compartments. •Gurgling sound similar to water boiling. •Popping noise during automatic defrosting. •Clicking noise before the compressor starts.
	Other unusual noises are due to the reasons below and may need you to check and take action: The cabinet is not level. The back of appliance touches the wall. Bottles or containers fallen or rolling.
The motor runs continuously	It is normal to frequently hear the sound of the motor, it will need to run more when in following circumstances: • Temperature setting is set colder than necessary • Large quantity of warm food has recently been stored within the appliance. •The temperature outside the appliance is too high. •Doors are kept open too long or too often. •After your installing the appliance or it has been switched off for a long time.
A layer of frost occurs in the compartment	Check that the air outlets are not blocked by food and ensure food is placed within the appliance to allow sufficient ventilation. Ensure that door is fully closed. To remove the frost, please refer to cleaning and care chapter.

Temperature inside is too warm	You may have left the doors open too long or too frequently; or the doors are kept open by some obstacle; or the appliance is located with insufficient clearance at the sides, back and top
Temperature inside is too cold	Increase the temperature by following the “Display controls” chapter.
Doors can’t be closed easily	Check whether the top of the refrigerator is tilted back by 10-15mm to allow the doors to self close, or if something inside is preventing the doors from closing.
Water drips on the floor	The water pan (located at the rear bottom of the cabinet) may not be properly leveled, or the draining spout （located underneath the top of the compressor depot） may not be properly positioned to direct water into this pan, or the water spout is blocked. You may need to pull the refrigerator away from the wall to check the pan and spout.
The light is not working	•The LED light may be damaged. Refer to replace LED lights in cleaning and care chapter. •The control system has disabled the lights due to the door being kept open too long, close and reopens the door to reactivate the lights.

Reverse the door

The side in which the door opens can be changed from the right side (as supplied) to the left side, if the installation site allows for it.

Warning! When reversing the door, the appliance must not be connected to the mains. Ensure that the plug is removed from the mains socket.

Tools you will need:

1. 8mm socket driver



2. Cross-shaped screwdriver



3. Putty knife or thin-blade screwdriver



Note: When required, tilt the refrigerator side in order to gain access to the base, you should rest the appliance on soft foam packaging or similar material to avoid damage.

1. Stand the refrigerator upright. Open the upper door to take out all door racks (to avoid racks damaged) and then close the door.

2. Unscrew the upper door hinge and remove it. Remove the upper door from the middle hinge by carefully lifting the door straight up. Then place it on a smooth surface with its upper cover upwards.

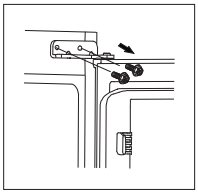

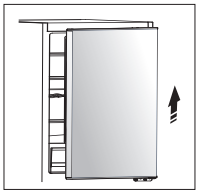

3. Loose screws used to fix the middle door hinges and remove them. Then remove the lower door. And unscrew the lower door hinge.

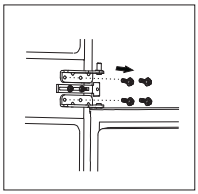

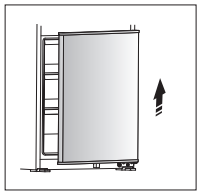

4. Change screw hole covers from left to right, and change the door hinges to opposite side (as shown in figure below).

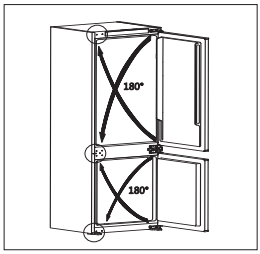

5. Fix the lower hinge with screws, and slot the lower door onto the bottom hinge pin and hold in position. Adjust the middle hinges to to the appliance position and then install it ensuring the lower door in secured in place.
6. Install the upper door and the upper hinge as the same way.

Note: When reversing the door, the cabinet installation can refer to Built-In Fridge Freezer installation instructions.

1) If doors squeak when opened,the sliders are mounted correctly, sliders should be checked that it is fitted level.

2) To ensure the doors are fully closed/sealed, conduct a test on both doors following the installation of decor door,such as using a sheet of papaer in-between the unit door and its seal and closing the decor door and seeing if there is any tension observed when pulling the sheet of paper - the sheet s hould hold in place and not fall out.

3) For reversing the door,the hole covers need to be removed from the current location and refitted to cover the new holes. If these break when removing and can be replaced by accessory bag.

Disposal of the appliance

It is prohibited to dispose of this appliance in domestic household waste.

Packaging materials

Packaging materials with the recycle symbol are recyclable. Dispose of the packaging in a suitable waste collection container to recycle it.

Before disposal of the appliance.

1. Disconnect the main plug from the main socket.
2. Cut off the main cable and discard it.

	Correct disposal of this product
	This marking indicates that this product should not be disposed with other household wastes throughout the EU. To prevent possible harm to the environment or human health from uncontrolled waste disposal, recycle it responsibly to promote the sustainable reuse of material resources. To return your used device, please use the return and collection systems or contact the retailer where the product was purchased.They can take this product for environmental safe recycling.

To avoid contamination of food, please respect the following instructions
- Opening the door for long periods can cause a significant increase of the temperature in the compartments of the appliance.
- Clean regularly surfaces that can come in contact with food and accessible drainage systems.
- Store raw meat and fish in suitable containers in the refrigerator, so that it is not in contact with or drip onto other food.
- Two-star frozen-food compartments are suitable for storing pre-frozen food, storing or making icecream and making ice cubes.
- One-, two- and three-star compartments are not suitable for the freezing of fresh food.

Order	Compartments TYPE	Target storage temp.[℃]	Appropriate food
1	Fridge	+2～+8	Eggs, cooked food, packaged food, fruits and vegetables, dairy products, cakes, Drinks and other foods which are not suitable for freezing.
2	(***)*-Freezer	≤-18	Seafood (fish, shrimp, shellfish), freshwater aquatic products and meat products (recommended time is 3 months – nutrition values and taste decrease with time), suitable for frozen fresh food.
3	***-Freezer	≤-18	Seafood (fish, shrimp, shellfish), freshwater aquatic products and meat products (recommended time is 3 months – nutrition values and taste decrease with time). Not suitable for freeing fresh food.
4	**-Freezer	≤-12	Seafood (fish, shrimp, shellfish), freshwater aquatic products and meat products (recommended time is 2 months – nutrition values and taste decrease with time). Not suitable for freeing fresh food.
5	*-Freezer	≤-6	Seafood (fish, shrimp, shellfish), freshwater aquatic products and meat products (recommended time is 1 month – nutrition values and taste decrease with time). Not suitable for freeing fresh food.
6	0-star	-6～0	Fresh pork, beef, fish, chicken, some packaged processed foods, etc. (Recommended to eat within the same day, preferably not later than 3 days) . Partially packed/wrapped up encapsulated processed foods (non-freezable foods)
7	Chill	-2～+3	Fresh/frozen pork, beef, chicken, freshwater aquatic products, etc.(7 days below 0 ℃ and above 0 ℃ is recommended for consumption within that day, preferably no more than 2 days). Seafood (less than 0 for 15 days, it is not recommended to store above 0 ℃)

8	Fresh Food	0～+4	Fresh pork, beef, fish, chicken, cooked food, etc. (Recommended to eat within the same day, preferably no more than 3 days)
9	Wine	+5～+20	red wine,white wine,sparkling wine etc.

Note: please store different foods according to the compartments or target storage temperature of your purchased products.

- If the refrigerating appliance is left empty for long periods, switch off, defrost, clean, dry, and leave the door open to prevent mould developing within the appliance.

Water dispenser cleaning (special for water dispenser products):

- Clean water tanks if they have not been used for 48 h; flush the water system connected to a water supply if water has not been drawn for 5 days.

WARNING! Food needs to be packed in bags before putting into the refrigerator, and liquids need to be packed in bottles or capped containers to avoid the problem that the product design structure is not easy to clean.

Fridgemaster Technical Helpline and Service Centre - Telephone

0191 387 0804

fridgemaster

FRIDGEMASTER
Ground floor, Munroe Court,
White Rose Office Park,
Millshaw Park Lane,
Leeds LS11 0EA
United Kingdom

Fridgemaster Technical helpline and
Service Centre
Telephone 0191 387 0804

Fridgemaster@0800repair.com

This symbol on the product or in the instructions means that your electrical and electronic equipment should be disposed at the end of its life separately from your household waste. There are separate collection systems for recycling in the EU.
For more information, please contact the local authority or your retailer where you purchased the product.

CE