KOLPAK
Protecting Your Future

Refrigeration System

Original Instructions
Installation, Operation and Maintenance Manual

This manual is updated as new information and models are released. Visit our website for the latest manual.

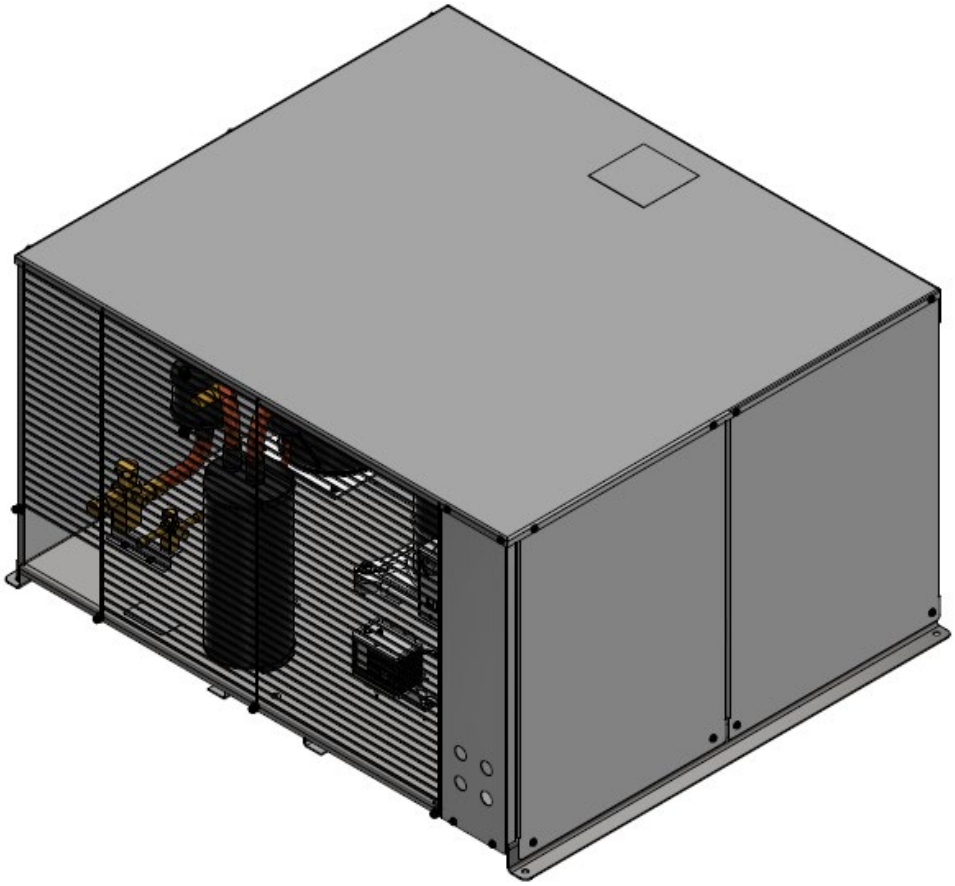

KOLPAK

Part Number: 550001058-17 5/23

Safety Notices

⚠ DANGER

Indicates a hazardous situation that, if not avoided, will result in death or serious injury. This applies to the most extreme situations.

⚠ Warning

Indicates a hazardous situation that, if not avoided, could result in death or serious injury.

Notice

Indicates information considered important, but not hazard-related (e.g. messages relating to property damage).

⚠ Caution

Indicates a situation that, if not avoided, could damage the refrigeration system or result in minor injury.

NOTE: Indicates useful, extra information about the procedure you are performing.

⚠ Warning

Read this manual thoroughly before operating, installing or performing maintenance on the equipment. Failure to follow instructions in this manual can cause property damage, injury or death.

⚠ Caution

Installation and maintenance/servicing are to be performed only by trained and qualified personnel familiar with commercial refrigeration systems.

⚠ Caution

Ensure that all field wiring conforms to the equipment requirements and all applicable local and national codes.

⚠ Caution

Disconnect all power sources before servicing the refrigeration equipment.

⚠ Caution

Sheet metal and coil surfaces have sharp edges. Use appropriate protective gloves to prevent injury.

⚠ Caution

Use appropriate eye protection during installation and servicing.

Table of Contents

Section 1
General Information

Receiving Inspection 4
Warranty Information 4

Section 2
Installation

Air Cooled Condensing Units 5
Water Cooled Condensing Units 7
Evaporator Units 10

Section 3
Wiring

Wiring 11

Section 4
Piping

Piping 12
Cleanliness 12
Pipe Supports 12
Oil Traps 13
Drain Lines 13
Pre-Charged Lines 14
Leak Testing 15
PR Models 15
PC Models 16
PCL Models 16
System Evacuation 16
PR Models 16
PC Models 16
PCL Models 17
Refrigerant Charging 17

Section 5
Operational Start-Up

Pre-Start Checks 18
Compressor Mounts 18
Start-Up 19
Compressor Superheat 19
Evaporator Superheat 20
Johnson Control Thermostat 21
Three button Touch Pad 21
Parameter Codes And Modes of Operation 22
Basic Menu 26
Advanced Menu 27
Setting Up A Regular Or Timed Defrost Off-Cycle 29
Troubleshooting 32
Electric Defrost Timer 34

Section 6
Maintenance

Preventive Maintenance Tasks 36
P.O.E. Lubricants 36

Section 7
Troubleshooting

Evaporator 37
Condensing Unit 38

System Start-Up Checklist 40

Section 1
General Information

Receiving Inspection

1. Check the shipment carefully and compare to the bill of lading.
2. Account for all items listed and inspect each container for damage.
3. Carefully inspect for any concealed damage.
4. Report any shortages or damages to the carrier, note on the bill of lading, and file a freight claim.
5. Damaged material cannot be returned to the manufacturer without prior approval.
6. A Return Material Authorization (RMA) must be obtained. Contact a sales representative at 800-826- 7036.

Warranty Information

For information regarding warranty guidelines, claim form, product registration, warranty verification, or locating a service provider please visit our website at www.kolpak.com or call 800-225-9916.

Section 2
Installation

Air Cooled Condensing Units

- Check the selected installation location to ensure that racks, braces, flooring, foundations, etc. are adequate to support the condensing unit weight.
- The installation location is clean, dry, and level.
- Locate away from corrosive and noise sensitive atmospheres.
- Use the condensing unit skid and base when moving the unit. Do not remove unit from skid until the unit is moved to the mounting location.
- Mount the condensing unit base to pads or structural rails using properly sized bolts through the unit base. Center of condensing unit needs to be properly supported.



Correct



Incorrect

- Locate where there is a sufficient and unrestricted supply of clean ambient air.
- Locate where this is adequate space for the removal of the heated discharged air from the condensing unit area.
- Do not position multiple units so that discharge air from one unit is blowing into the condenser inlet air of the other unit.
- All sides of the unit should be positioned a minimum distance equal to the total width of the condensing unit away from any other unit, wall, or obstruction.

Example of Multiple Units with Horizontal Airflow

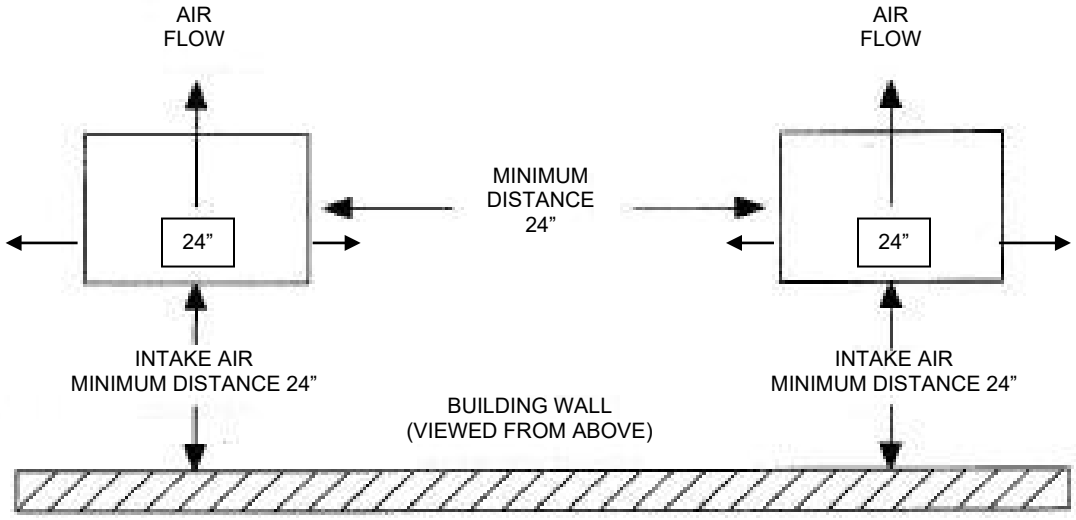

⚠ CAUTION

Failure to observe clearance and air flow requirements will result in poor system performance and premature equipment failure!

Water Cooled Condensing Units

- Water cooled condensing units are for indoor use only.
- Check the selected installation location to ensure that racks, braces, flooring, foundations, etc. are adequate to support the condensing unit weight.
- The installation location is clean, dry, and level.
- Locate away from corrosive and noise sensitive atmospheres.
- Use the condensing unit skid and base when moving the unit. Do not remove unit from skid until the unit is moved to the mounting location.
- Mount the condensing unit base to pads or structural rails using properly sized bolts through the unit base. Center of condensing unit needs to be properly supported.

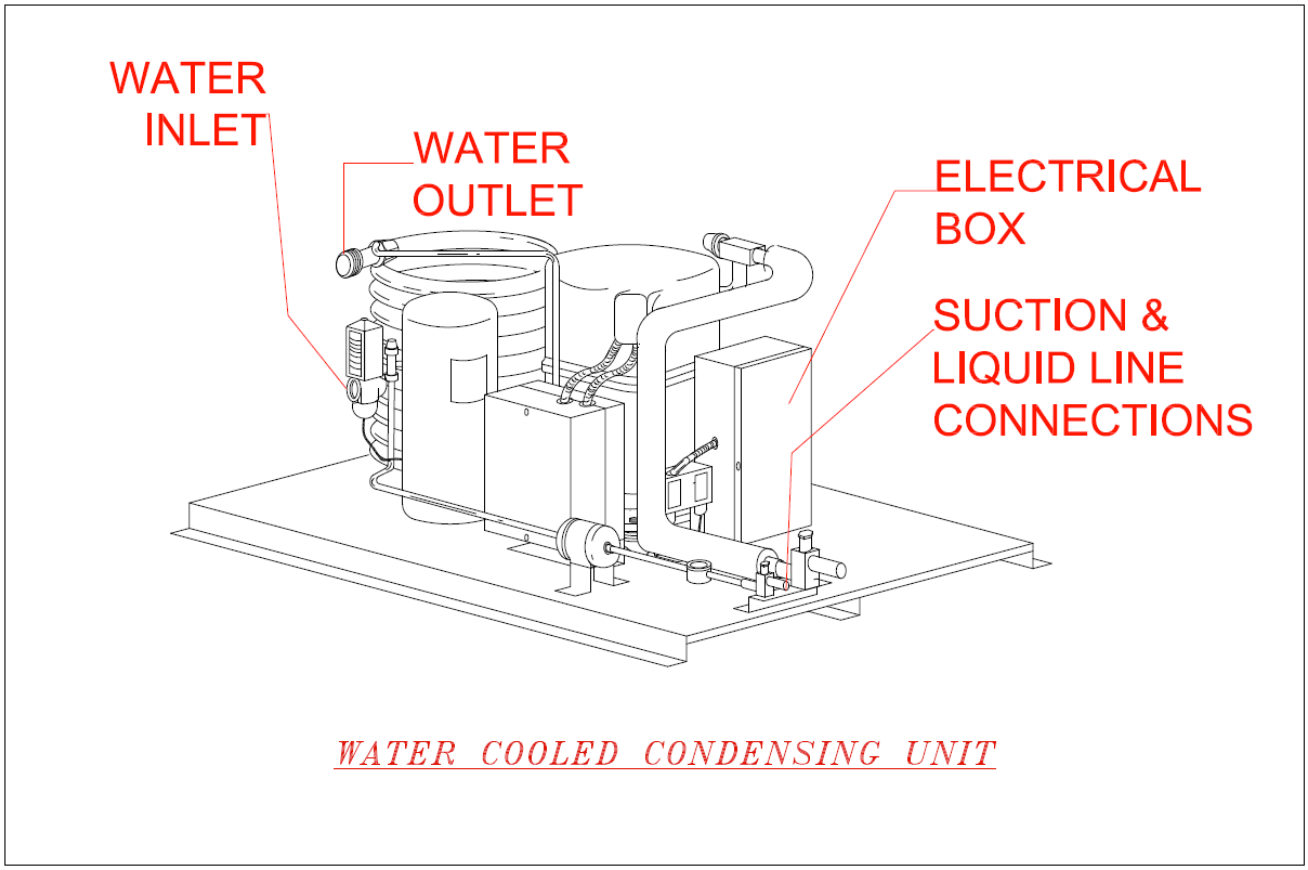

- Maximum water inlet pressure is 150 psig. An optional high pressure valve is available for up to 350 psig.
- Minimum inlet water temperature is 42°F.
- Maximum inlet water temperature is 85°F.
- System BTUH capacity is based on 105°F condensing temperature.
- See individual water cooled condensing unit specification sheet for electrical requirements, water flow requirements, as well as water connection sizes.

Adjusting The Water Regulating Valve

- Water regulating valves are used for regulating refrigerant head pressure in water-cooled condensers.
- Valves may be adjusted with standard service valve wrenches or screwdrivers.
- To raise the valve opening point, turn the adjusting screw, located at the top of range spring housing, counterclockwise.

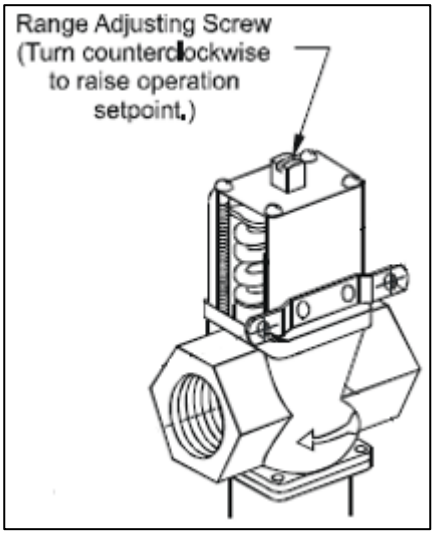

- Turn the adjusting screw clockwise to lower the opening point. Exact settings can be made using a pressure gauge in the refrigerant line to determine the throttling point.
- Put the system under normal operating load and adjust to the desired operating pressure.
- If the compressor operates in high ambient temperatures, head pressures may remain high enough during off cycles to prevent the valve from closing completely. In such instances, the opening point of the valve should be raised just enough to cause the valve to close during compressor standby periods. This will also raise the throttling point.

Adjusting The Water Balancing Valve

- Water balancing valves are valves designed to attain hydraulic balance within such systems by regulating fluid flow and pressure. When selected and installed properly, they equalize system pressure.
- They use the latest flow technology to ensure that the design flow rate is achieved at all times irrespective of any pressure changes within the system.



- To measure flow, connect the TACO PRESSURE GAUGE (No. 779 0-10", 0-100" dual recommended, No. 775 0-135", 0-100' for higher pressure drops as an alternate) to the pressure port connections.
- Position the meter case in a safe location adjacent to the valve.

⚠CAUTION

Take care in removing the pressure port connection caps on the ACCU-FLO valve, since they will be at the same temperature as the pipeline. There may be some fluid trapped behind the cap. Slowly unscrew the caps and look for continuous leakage. Continuous leakage may indicate a failure of the stem seal in the pressure port connection. Process fluid at temperature and under pressure may be present. If continuous leakage is present, do not remove the cap. Appropriate corrective action must be taken.

- Connect the gauge hoses to the pressure port connections, the RED hose to the port adjacent to the letter H on the valve body and the YELLOW hose to the other port indicated by the letter L on the valve body.
- The pressure port connection valves open automatically as the hoses are screwed onto the fitting, allowing fluid to flow into the meter.

Notice

If the hoses are connected one at a time, the second hose will bleed fluid as the first hose is connected and fluid flows into the meter. This will stop as the meter fills one side of the measurement cylinder.

- Read the pressure drop on the appropriate meter scale.

Notice

If you use a meter graduated in feet of water, convert the reading to inches. Read the flow in gallons per minute on the appropriate slide rule scale.

- When reading pressure drop, wait a sufficient amount of time to insure that all air has been bled from the hoses and meter. Refer to the gauge operating instructions.
- Adjust the ACCU-FLO valve by turning the valve stem until the desired pressure drop is achieved. On all valves from 1 /2" thru 4", the flow measurement is independent of indicator setting.
- When the proper setting has been achieved, slightly loosen the two socket head cap screws and rotate the Memory Stop around until it touches the back side of the indicator. Then tighten the screws to securely set the open memory position. The Memory Stop is used to indicate the last set open position. It should not be used as a “hard” stop which can take a lot of force.
- Review the pressure drop, and if it is correct, remove the hoses and replace the pressure port caps.

Evaporator Units

- Do not place the evaporator above or close to door openings. This will help prevent potential icing problems.
- Allow a minimum clearance equal to or greater than the coil height on all sides of the coil for proper air flow and service access.
- Use the evaporator coil for a template to locate and drill the mounting holes (1/2" diameter).
- Place a 1" and a 1-5/8" washer on each nylon bolt and insert through the drilled mounting holes in the ceiling from the exterior of the walk-in ceiling panel.

NOTE: Nylon bolts are supplied to prevent thermal transfer between the exterior of the walk-in and the interior of the walk-in. Do not use metal bolts.

- Lift the evaporator coil until the nylon bolts extend through the mounting brackets.
- Install washers and secure with nuts. Tighten until the coil is firm against the ceiling. The evaporator coil must be level.
- Additional information is available in the installation manual supplied with the evaporator.

⚠ CAUTION

Failure to observe clearance and air flow requirements will result in poor system performance and premature equipment failure!

Evaporator Coil Mounting Diagram

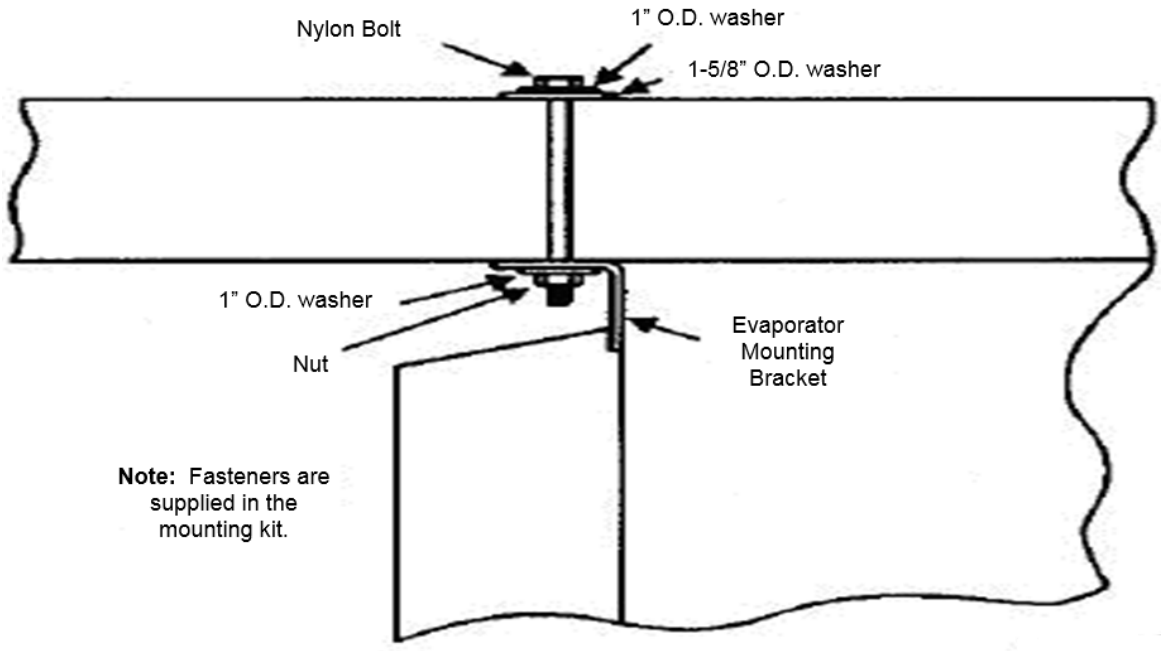

Section 3
Wiring

Wiring

- All electrical connections and routing must comply with local and national codes.
- Do not modify the factory installed wiring without written factory approval.
- The field wiring must enter through the knockouts provided.
- Refer to the nameplate on the condensing or evaporator coil to determine the proper electrical power supply.
- Wire type should be of copper conductor only and properly sized to handle the electrical load.
- The unit and coil must be properly grounded.
- Condensing unit wiring diagrams are and attached inside the electrical box cover.
- Evaporator coil wiring diagrams are and inside the evaporator cover.
- To view Basic Cooler/Freezer Evaporator Wiring Service Video, scan the QR code below.

- For the latest wiring diagrams, scan the QR code below.

⚠ WARNING

All wiring must comply with local and national codes. Wiring must be performed only by a refrigeration technician or certified electrician. Failure to follow these guidelines may result in injury!

⚠ CAUTION

Check all wiring connections, including factory terminals, before operation. Connections can become loose during shipment and installation.

Section 4
Piping

Piping

- All refrigeration piping and components are to be installed in accordance with applicable local and national codes and in conformance with industry refrigeration guidelines to ensure proper operation of the refrigeration system.
- Only refrigeration grade copper tubing should be used.
- Long radius elbows should be used. Short radius elbows have points of excessive stress concentration and are subject to breaking at these points, do not use short radius elbows.
- Suction lines must be insulated with a minimum ¾" thick insulation tubing to reduce heat pick-up.

Cleanliness

- Condensing units and evaporator coils are cleaned and dehydrated at the factory.
- The condensing unit must remain closed and pressurized until the piping is complete and final connections are ready to be made.

⚠ CAUTION

The maximum air exposure for dehydrated condensing units is 15 minutes. Systems exposed longer than 15 minutes must have the compressor oil and drier filter replaced. Leaving a system exposed to the atmosphere for more than 15 minutes can result in premature system failure.

- Do not remove base mount valve covers until work is ready to be performed.
- Ensure that all refrigeration tubing is clean and dry prior to installation.
- Use only tubing cutters when trimming tubing to the proper length. Do not use saws to cut tubing.

⚠ CAUTION

The use of saws to cut tubing can contaminate the system with copper chips causing premature system failure.

- Brazing joints require a dry inert gas, typically nitrogen, be passed through the lines at a low pressure to prevent scaling and oxidation.
- When brazing, use only silver content brazing alloys. Minimize the amount of flux to prevent internal contamination. Flux only the male portion of the joint.
- Thoroughly clean fluxed joints after brazing.

⚠ CAUTION

Dry inert gas must be passed through the system while brazing to prevent scaling and oxidation. Scaling and oxides can clog refrigeration components resulting in system failure.

Pipe Supports

- All tubing should be supported in a least two locations (near the end of each tubing run).
- Long runs will require additional support.
- As a guide, support 3/8" to 7/8" pipe every five feet, 1-1/8" to 1-3/8" every seven feet, and 1-5/8" to 2-1/8" every ten feet.
- Do not leave a corner unsupported when changing directions.
- Place supports within 2 feet of each direction change.
- Piping that is attached to a vibrating object (such as a compressor or compressor base) must be supported in a manner that will not restrict the movement of the vibrating object.
- Rigid mounting will fatigue the tubing causing refrigerant leaks.

Oil Traps

- To ensure proper oil return to the compressor, a P-type oil trap should be installed at the base of each suction riser of four feet or more.
- The suction trap must be the same size as the suction line.
- Additional traps are necessary for long vertical risers. Add a trap for each length of pipe (approximately 20 feet) to insure proper oil return.
- Suction lines must slope ¼" per 10 feet toward the compressor.
- Install a suction line trap at the evaporator outlet if the suction line rises to a point higher than the connection on the evaporator.

⚠ CAUTION

Failure to properly install oil traps can prevent sufficient oil return to the compressor resulting in premature compressor failure.

Drain Lines

- Evaporator coil drain lines should be pitched a minimum of 1/2" per foot to allow proper drainage and exit the walk-in as quickly as possible.
- Insulate and seal the drain line where it passes through the wall.
- Copper drain line is required.
- Freezer compartment drain lines must have heat tape wrapped around the copper drain line and must have ¾" thick insulation tubing.
- Do not locate drain line P-traps within the freezer space.
- Do not reduce the drain line size.
- Locate a drain line P-trap outside of the cooler space.
- Any outdoor P-traps exposed to low ambient temperatures should be wrapped with a drain line heater (provide 20 watts of heat per foot of drain line at 0°F, 30 watts per foot at -20°F.
- Freezer/cooler combo boxes can have one common drain line. However, there must be a P-trap located between the freezer evaporator and the cooler evaporator located inside the cooler compartment.
- The cooler compartment P-trap should be located between the cooler evaporator and the external drain location.

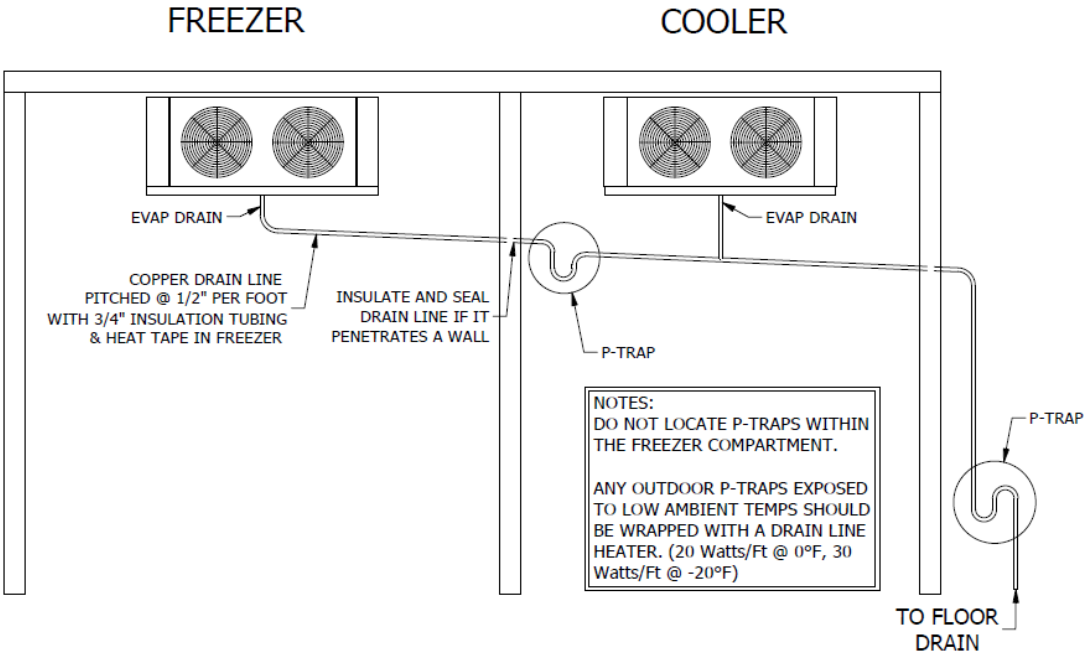

Pre-Charged lines and Quick Connects

- Route the suction and liquid line sets between the condensing unit and evaporator coil following the piping guidelines identified in this manual.
- Remove the dust caps from the quick connect fittings and verify that the o-rings are intact.
- Wipe the coupling seals and threaded surfaces with a clean cloth to prevent contamination.
- Lubricate the threads and o-rings with Polyol Ester oil.
- Thread the coupling halves together by hand to ensure proper thread mating.
- Tighten with a wrench until the coupling bodies “bottom” or until there is definite resistance.
- Tighten an additional ¼ turn to ensure proper brass-to-brass seating.
- Once the system is opened and pressurized, check each fitting for refrigerant leaks. If a leak is detected, tighten until the leak stops.

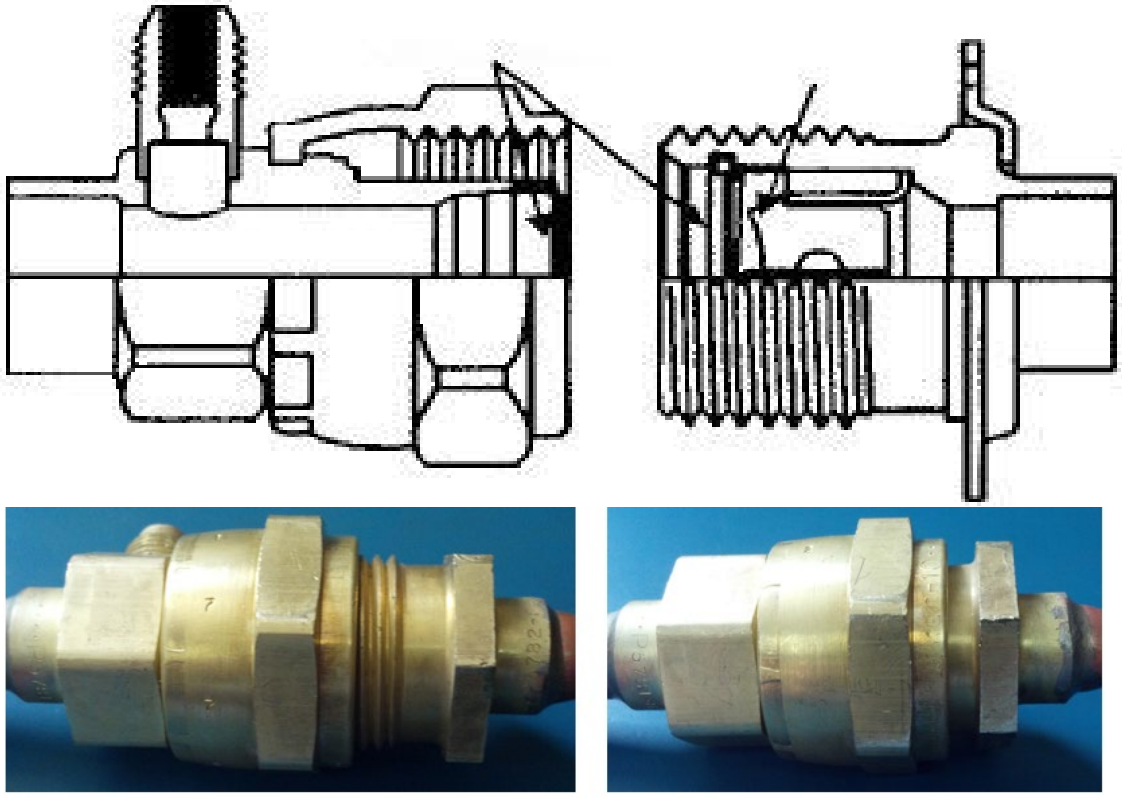

INCORRECT CORRECT

⚠ WARNING

Do not loosen and disconnect the quick connect fittings before reclaiming the refrigerant and depressurizing the system. Disconnecting a pressurized system can result in injury!

⚠ CAUTION

Quick connects are for one time use only. Once disconnected, the coupling cannot be re-used. Refrigerant leaks will occur if the couplings are re-used resulting in poor system performance.

- Excess line set length should never be allowed to coil in the vertical position. Excess line length should be laid flat on its side.



INCORRECT



CORRECT

Leak Testing

- After all connections are complete the refrigeration system must be tested for leaks.
- Failure to perform a leak test can result in unsatisfactory system performance, additional servicing and service costs, and possible system failure.
- Leak test should be performed using an electronic leak detector.
- All joints and components, both factory and field installed, should be thoroughly inspected for leaks.
- The system installation must be leak free!

Leak Testing "PR" model systems

- Open both the liquid and suction service valves.
- Ensure the solenoid valve is energized and open.
- Add 50 psi refrigerant, then pressurize with dry nitrogen to the low side test pressure identified on the unit rating label.
- Allow thirty minutes for refrigerant to reach all parts of the system.
- Check all joints and components with an electronic leak detector.

Leak Testing "PC" model systems

- Leave the service valves closed, the condensing unit is charged with refrigerant.
- Ensure the solenoid valve is energized and open.
- Add 50 psi refrigerant, then pressurize with dry nitrogen to the low side test pressure identified on the unit rating label.
- Allow thirty minutes for refrigerant to reach all parts of the system.
- Check all joints and components with an electronic leak detector.

Leak Testing "PCL" model systems

- Open both the liquid and suction service valves.
- Ensure the solenoid valve is energized and open.
- Allow thirty minutes for refrigerant to reach all parts of the system.
- Check all joints and components with an electronic leak detector.
- If a leak is detected, relieve the pressure and/or reclaim the refrigerant and repair the leak.
- If additional brazing is required, pass a dry inert gas (nitrogen) through the system to prevent contamination.
- Reference page 12 of this manual for leaks located at quick connects couplings.
- Retest the system as outlined above until no leaks are detected.

⚠CAUTION

If a braze joint is detected leaking, dry inert gas must be passed through the system while repairing the joint to prevent scaling and oxidation. Scaling and oxides can clog refrigeration components resulting in system failure.

⚠CAUTION

Always use the system specified refrigerant when pressuring to perform a leak test.

System Evacuation

- Evacuation of the refrigeration system is necessary to remove all air and moisture from the system.
- A reliable rotary vacuum pump with an accurate deep vacuum gauge is recommended.
- Do not use the system compressor as a vacuum pump and do not operate the compressor while the system is under vacuum.

Evacuation of "PR" model systems

- Open both the liquid and suction service valves.
- Ensure the solenoid valve is energized and open.
- Connect vacuum pump to the liquid and suction service valves located on the condensing unit.
- Evacuate the system to 250 microns and maintain for a minimum of 4 hours.
- Perform a vacuum decay test for a minimum of ten minutes to ensure the system is leak free and dry.

Evacuation of "PC" model systems

- Leave the service valves closed, the condensing unit has been evacuated and is charged with refrigerant.
- Ensure the solenoid valve is energized and open.
- Connect vacuum pump to the liquid and suction service valves. located on the condensing unit.
- Evacuate the system to 250 microns and maintain for a minimum of 4 hours.
- Perform a vacuum decay test for a minimum of ten minutes to ensure the system is leak free and dry.

Evacuation of "PCL" model systems

- "PCL" systems do not require evacuation.

⚠ CAUTION

Do not use the system compressor to evacuate the system. Do not start the compressor while the system is under vacuum. This may damage to the compressor and cause premature system failure.

Refrigerant Charging

- The refrigerant charge should be added to the system through the liquid line service valve located on the condensing unit.
- Do not charge liquid refrigerant into the suction service valve!
- The initial charge should be determined by weight and sight glass indication.
- Start the system. If the condensing temperature is 105° F or greater, charge the system until the sight glass clears.
- If the condensing unit temperature is below 105° F, reduce the condenser face surface area to raise the discharge pressures above 105° F and to charge to a clear sight glass.
- Return to a full condenser face area when charging is complete.

NOTE: PC & PCL refrigerant charge amounts are based on average ambient operating temperatures across the United States. Any refrigerant amount added or removed based on ambient operating temperatures is considered part of normal maintenance and is not covered under warranty.

⚠ CAUTION

Do not charge liquid refrigerant into the suction service valve located on the condensing unit. Do not overcharge the system. These conditions can permit liquid refrigerant to enter the compressor and cause damage to internal components resulting in premature system failure.

Section 5
Operational Start-Up

Pre-Start Checks

- The first 2 – 4 hours of operation after initial start-up is a critical time.
- Do not just start the system and leave.
- Pressure values, compressor and evaporator superheat, and inspecting for excessive vibrations and loose connections are some of checks that must be performed prior to leaving the system.
- Verify that all service valves are fully open.
- Ensure that all refrigerant and electrical connections are tight.
- Verify that the wiring and piping is properly routed and secured.
- The compressor mounting bolts are properly adjusted (see compressor mounts on page 18).
- All fan motors and mounting brackets are tight.
- The condensing unit base and evaporator coil are properly secured.

Compressor Mounts

- Hermetic Compressors – hermetic compressor springs are mounted internally; check the compressor mounting bolts to ensure the nuts have not become loose during shipment.

- Semi-Hermetic Compressors – most semi-hermetic compressors have external spring mounts and are factory assembled. The following actions are required once the condensing unit is installed and before system start-up:

    - Loosen the upper mounting nuts.
    - Remove the spring steel clips from the mounting springs.
    - Retighten the upper mounting nuts until the compressor can float on the springs approximately 1/16" between the mounting nut and rubber grommet.

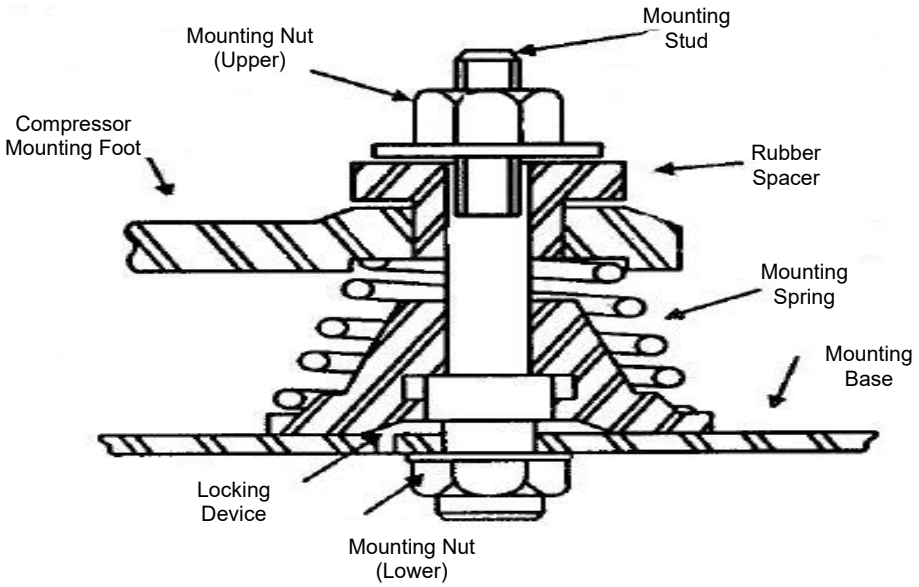

Properly Adjusted Compressor

⚠CAUTION

Failure to ensure the compressor mounts are properly tightened can result in fatigue to the system piping causing leaks and poor system performance.

Start-Up

⚠ CAUTION

Do not start the system while in a vacuum. Do not leave the system unattended until normal operating conditions are achieved.

- Operate the system for a minimum of two hours and perform checks of the following:
    - Check the compressor discharge and suction pressures to ensure they are in the normal operating range.
    - Check the liquid line sight glass for proper refrigerant charge (based off of 105ºF condenser coil).
- Monitor the compressor oil level (semi-hermetic compressors), add oil as necessary to keep the level at ¾ sight glass when idle and ½ sight glass when running.
- Check the voltage and amperage at the compressor terminals. Voltage must be within +10% or -5% of the rating indicted on the condensing unit name plate. On three phase compressors, verify there is a balanced load.
- Check all fans on the evaporator coil and condensing unit to be sure they are operational and turning in the correct direction.
- Check the piping and electrical connections for vibration. Add supports and strapping if needed.
- Check the crankcase heater operation (if equipped).
- Set the defrost control time and verify the defrost initiation settings. See pages 28-30 for additional details.
- Set temperature control to desired temperature range.
- Check the compressor and evaporator superheat (reference pages 21-23).
- After all system checks have been checked, properly adjusted, and verified, replace all Schrader caps, service valve caps, electrical box covers, housings, etc. File a copy of this manual for future reference.

⚠ CAUTION

Failure to check and properly adjust compressor superheat can result in premature system failure.

Compressor Superheat

- Compressor superheat is a critical value that must be checked. Check the compressor superheat as follows:
    - Determine the suction pressure at the suction service valve of the compressor.
    - Determine the saturation temperature at the observed suction pressure using refrigeration pressure temperature tables.
    - Measure the suction line temperature 6 -10 inches away from the compressor.
    - Subtract the saturation temperature (step 2) from the measured temperature (step 3). The difference is the superheat of suction gas.
- A low suction superheat can cause liquid to return to the compressor. This will cause dilution of the oil and eventual failure of the bearings, rings and valves.
- A high suction superheat will cause excessive discharge temperatures, which cause a breakdown of the oil. This causes piston ring wear, and piston and cylinder wall damage.
- System capacity decreases as the suction superheat increases.
- For maximum system capacity, keep the suction superheat as low as practical. Copeland requires a minimum compressor superheat of 20°F; however, to improve compressor life, 25°F to 40°F is preferred.
- Adjust the expansion valve at the evaporator when adjustments to the suction superheat are necessary.
- Refer to “Evaporator Superheat” on the next 2 pages for more information.

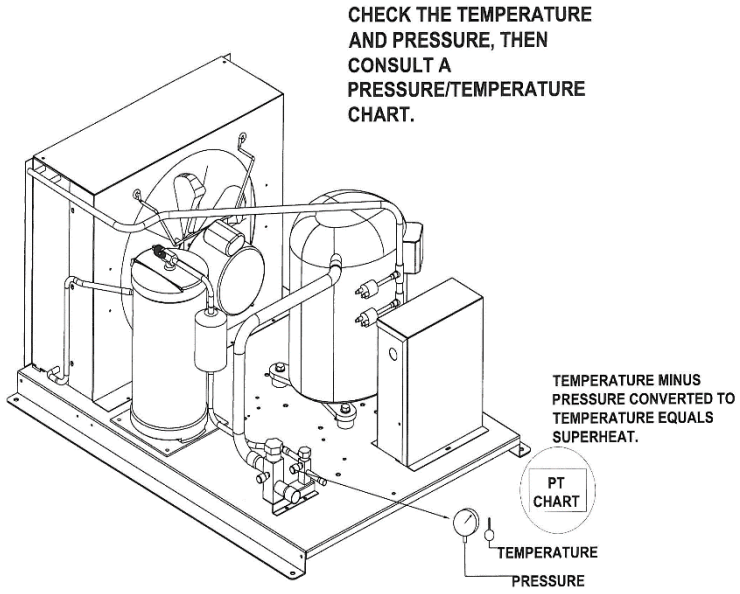

DETERMINING COMPRESSOR SUPERHEAT

Evaporator Superheat

- Check the evaporator superheat once the walk-in has reached the desired temperature. Generally, systems with a design temperature drop of 10°F should have an evaporator superheat value of 6°-10°F on freezers and 8°-12°F on coolers for maximum efficiency.
- To determine the evaporator superheat:
    - Measure the suction pressure at the evaporator outlet.
    - Convert the pressure to saturation temperature referencing a temperature-pressure chart.
    - Measure the temperature of the suction line at the expansion valve bulb. Ensure the bulb is mounted at the correct location on the suction tube.
    - Subtract the saturation temperature reading (step 2) from the measured temperature (step 3). The difference is the evaporator superheat.

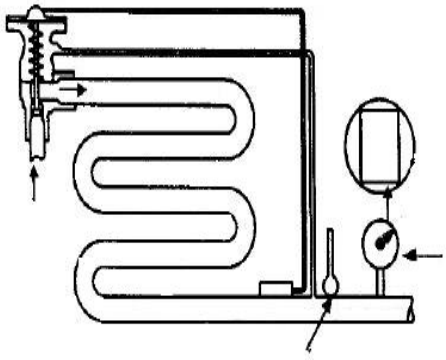

Temperature minus pressure converted to temperature equals superheat

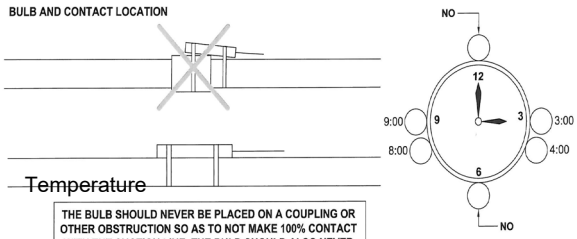

THE BULB SHOULD NEVER BE PLACED ON A COUPLING OR OTHER OBSTRUCTION SO AS TO NOT MAKE 100% CONTACT WITH THE SUCTION LINE. THE BULD SHOULD ALSO NEVER BE PLACED ON A TRAP, OR DOWNSTREAM OF A TRAP IN THE SUCTION LINE. LOCATING THE BULD AT THE TOP OR BOTTOM OF THE SUCTION LINE IS NOT RECOMMENDED. THE BULD SHOULD BE LOCATED AT THE 3:00, 4:00, 8:00 OR 9:00 POSITION ON THE SUCTION LINE.

⚠ CAUTION

Minimum compressor superheat of 20°F may override these recommendations on systems with short line runs.

⚠ CAUTION

The condensing unit must have the discharge pressure above the equivalent 105°F condensing pressure (reference refrigerant charging on page 16).

⚠ CAUTION

Correct location and full contact of the expansion valve bulb is extremely important for proper system performance.

Johnson Control A421 Electronic Temperature Control

- The front panel of the A421 Series Electronic Temperature Control has an LCD and a three-button UI

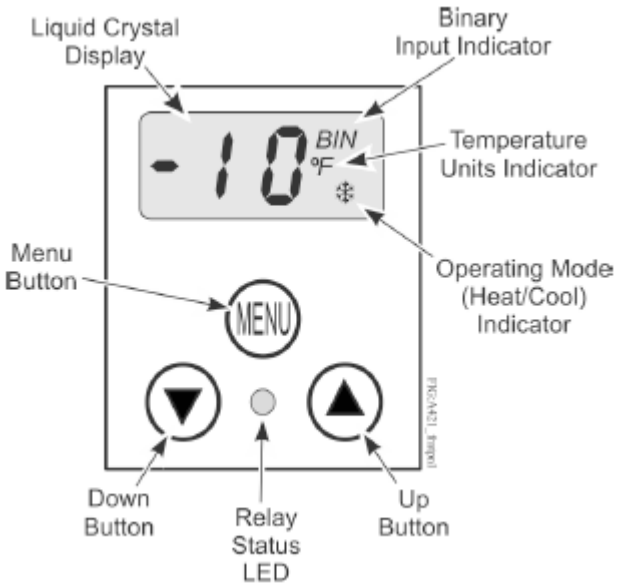

LCD

- The A421 Series Control has a backlit LCD screen. You can adjust the LCD brightness. During normal operation, the LCD displays the Main screen, which provides the following information:
  - Temperature sensed at the A99 sensor
  - Selected temperature units (°F or °C)
  - Mode of operation (Flame = Heating mode, Snowflake = Cooling mode)
  - Binary Input status (BIN) when a user-supplied binary input (switch) is connected and closed to enable the temperature setback feature.
- During setup and adjustment, the LCD displays the parameter code screens and the parameter value screens. See the A421 Control parameter setup menus for more information.

Three-button touchpad

- The touchpad has three buttons for setup and adjustment of the A421 Control. See Navigating the Basic and Advanced menus for more information about the three-button touchpad.

Relay status LED

- The green LED on the front panel illuminates when the SPDT output relay is energized and the LC and LNO contacts are closed.

Parameter codes and modes of operation

- **Relay Off temperature (OFF)** Select the temperature at which the output relay de-energizes, the LC to LNO relay contacts open (cutout), and the green LED goes off. The range of usable temperature values is -40°F to 212°F (-40°C to 100°C) in 1° increments.

- **Relay On temperature (On)** Select the temperature at which the output relay energizes, the LC to LNO relay contacts close (cut in), and the green LED lights. The range of usable temperature values is -40°F to 212°F (-40°C to 100°C) in 1° increments.

- **Heating or Cooling mode of operation** When you select your required On and OFF values, the control automatically determines the mode of operation and displays the proper mode icon on the Main screen.

Note: The A421 Series controls do not have jumpers for setting up the heating or cooling mode.

- The heating or cooling mode is determined by the On and OFF value relationship as follows:

  • **OFF > On** = Heating mode = Flame icon

  • **OFF < On** = Cooling mode = Snowflake icon

- **Important:** During normal operation, adjusting just the On value or just the OFF value on the A421 control changes the differential between On and OFF, and can potentially change the mode of operation from heating to cooling or cooling to heating. To maintain a constant differential between on and off, you must adjust both the on and off values by an equal number of degrees, or set up the control in the Restricted Adjustment mode. See Restricting User Adjustment.

- **Anti-short cycle delay (ASd)** Select the minimum time that the output relay remains off (de-energized) before the next on-cycle can start. The ASd interval overrides any load demand (On) and does not allow the output relay to go on until the selected ASd interval has elapsed. See the following figure.

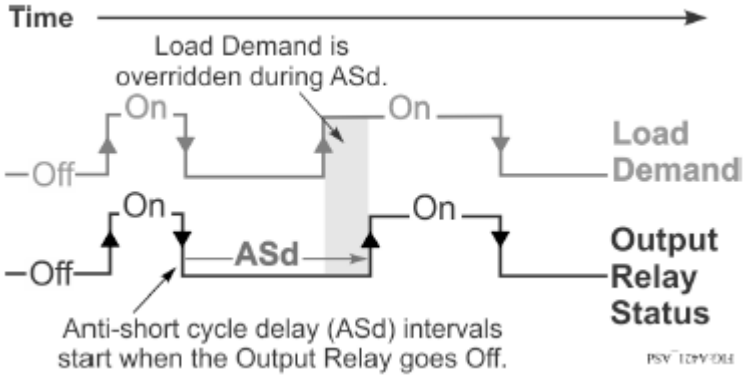

- Anti-short cycle delay is typically used for refrigeration applications so that the system pressure can equalize before restarting the compressor.

Note: When the ASd value is greater than 0, the delay interval initiates every time that the A421 Control is powers on and every time that an off-cycle begins. When the ASd interval is activated, the temperature sensed at the A99 sensor and the parameter code ASd flash alternately on the LCD. You can set the ASd interval from from 0 minutes to 12 minutes, in 1 minute increments.

- **Sensor Failure mode (SF)** Select whether the control's output relay operates as energized or de-energized in the event of a sensor or sensor wiring failure. When the control detects a sensor circuit failure, the output relay operates in the selected sensor failure mode. The LCD flashes SF and OP if the sensor circuit is open or SF and SH if the sensor circuit is shorted.

- **Temperature Units (Un)** Select the preferred temperature scale for your application. Select either the Fahrenheit (°F) or Celsius (°C) temperature scale.

Note: After you change the temperature units value (Un), confirm that the temperature values for the other parameter codes are still correct for your application.

- **Low Temperature Stop (LtS)** Select the lowest temperature value that the On/OFF control band can be adjusted to when control adjustment is restricted.

- **High Temperature Stop (HtS)** Select the highest temperature value that the On/OFF control band can be adjusted to when control adjustment is restricted.

- **Restricted Adjustment mode** The HtS and LtS values define the restricted adjustment temperature range and are enforced only when the A421 control is set to the restricted adjustment mode. See Restricting user adjustment.

Note: It is best practice to leave HtS and LtS at their default values, unless you intend to use the restricted adjustment mode.

Note: If you use the Temperature Setback feature in the Restricted Adjustment Mode, the effective On and OFF setback values (On + tBs and OFF + tBs) can be greater than the selected HtS value or less than the selected LtS value.

- **Temperature Setback (tSb)** Select a temperature value for setting back the On and OFF temperature values. When a user-supplied switch between the BIN and COM terminals closes, note the following changes:

  • The Main screen displays BIN in the upper-right corner of the LCD.

  • The temperature setback feature is enabled and the control uses the effective On and OFF setback values (On + tSb and OFF + tSb) to control the relay.

Note: The control displays only the original On and OFF values in both the normal and setback modes. The effective setback On and OFF values (On + tSb and OFF + tSb) never display on the control LCD. The temperature setback adjustment range is from -50°F to 50°F (-30°C to 30°C). Typically, heating applications require a negative temperature setback (tSb) value, and cooling applications require a positive value.

- **Sensor Offset Adjustment (So)** Sensor offset allows you to compensate for any difference between the displayed temperature value and the temperature sensed at the A99 sensor. Select a temperature value to offset the temperature displayed on the LCD from the temperature sensed at the sensor. The sensor offset adjustment range is from -5°F to 5°F (-3°C to 3°C) in 1° increments.

- **Backlight Brightness Level (bLL)** The backlight brightness level feature allows you to adjust the LCD backlight intensity. At level 0 the backlight is off. Level 10 is the brightest backlight setting and the system default. The selected backlight brightness level is applied to the LCD during normal operation. When you enter the programming menus to set up the control or press any key, the LCD automatically goes to the brightest level. If you do not press a key for 30 seconds, the main screen displays and the backlight setting reverts to the selected brightness level.

- **Defrost Cycle Time (dFt)** Select the time in minutes that the defrost cycle overrides On and keeps the relay Off. The dFt value can be between 1 minutes and 99 minutes. When the defrost cycle is On, the control is NOT running and the LCD displays the following screens: dEF (defrost mode), minutes remaining, and the temperature at the sensor. When the dFt is complete, the control returns to normal (On/Off cycle) operation.

- **Defrost Interval (dI)** Select the time in hours between the start of a defrost cycle and the next defrost cycle. The dI value can be set to 0 or 2 hours to 24 hours.

Note: At the initial power On, the defrost interval (dI) does NOT have a defrost cycle (dFt). The subsequent defrost intervals begin with the selected dFt. Setting the dl value to 0 eliminates regular or timed defrost cycles. You can still start or stop a defrost cycle by setting the SdF parameter or by using the binary input.

- **Start or Stop Defrost Cycle (SdF)** The Start/Stop Defrost Cycle parameter allows you to start a defrost cycle, when the control is in normal (On/Off cycle) operation, or stop a defrost cycle when the defrost cycle is On. Change to the SdF value to 1 to start a defrost cycle. Or, change the value to 0 to stop the defrost cycle, and return to normal (On/Off cycle) operation.

- **Binary Input modes (bIn)** The BIN mode allows you to select how the A421 Control operates when a user-supplied binary switch connected across BIN and COM on the TB3 terminal block is used with the control. Set the BIN parameter to 0 to use the temperature setback feature. Set the value to 1 and connect a user-supplied momentary contact switch to start or stop a defrost cycle.

Standard parameter setup codes, descriptions, range of values, and default values

Parameter code	Parameter description (menu)	Range of usable values	Factory default value[1]
Un	Temperature Units (Advanced only)	ºF or ºC	ºF
OFF	Relay Off Temperature (Basic, Advanced, and Restricted)	-40ºF to 212ºF (-40ºC to 100ºC)	25ºF
On	Relay On Temperature (Basic and Advanced)	-40ºF to 212ºF (-40ºC to 100ºC)	30ºF
ASd	Anti-Short Cycle Delay (Basic and Advanced)	0 minutes to 12 minutes	1 minute
tSb	Temperature Setback (Advanced only)	-50ºF to 50ºF (-30ºC to 30ºC)	0ºF
So	Sensor Offset Adjustment (Advanced only)	-5ºF to 5ºF (-3ºC to 3ºC)	0ºF
HtS	High Temperature Stop (Advanced only)	-40ºF to 212ºF (-40ºC to 100ºC)	212ºF
LtS	Low Temperature Stop (Advanced only)	-40ºF to 212ºF (-40ºC to 100ºC)	-40ºF
SF	Sensor Failure Action (Basic and Advanced)	0 = output relay deenergized 1 = output relay energized	1 output relay energized
bLL	LCD Backlight Brightness Level Adjustment (Advanced only)	0 to 10; 0 = backlight off, 10 = brightest backlight setting	10 (brightest backlight)
dFt	Defrost Cycle Time (Advanced only)	1 minutes to 99 minutes	30 minutes
dI	Defrost Interval (Advanced only)	0 or 2 hours to 24 hours	8 hours
SdF	Start or Stop Defrost Off-Cycle (Advanced only)	Change 0 to 1 to Start a new Defrost Cycle Change 1 to 0 to Stop a Defrost Cycle	0
bIn	Binary Input Mode (Advanced only)	0 = Temperature Setback Mode 1 = Start Defrost Cycle Mode	1

1 The default values for general application A421 models are shown. OEM A421 models may have different default values.

A421 Control parameter setup menus

- The A421 Temperature Controls have a Basic and an Advanced setup menu. You can scroll through the parameter setup codes, view and edit parameter values, and set up your control for your application requirement. The control also has a Restricted adjustment menu. See Restricting user adjustment for more information.

Note: The A421 Control retains a copy of the saved parameter values in memory. When you change and save a new value, the new value immediately overwrites the previous value and saves to memory. In the event of a power failure, brown out, or when you disconnect power from the control, all of the current parameter values in memory are retained. Reconnecting power to the control restores all of the saved values.

Navigating the Basic and Advanced menus

- The A421 Control buttons and display operate the same way in Basic and Advanced menus. You can observe the following behavior in any parameter code screen: The parameter code flashes on and off.
- To navigate through all of the parameter code screens, press **Down** or **Up**.
- To exit either menu and return to the Main screen, press **Down** and **Up** simultaneously.
- You can perform the following actions in any parameter code screen:
- The parameter value flashes on and off.
- To scroll through all of the available parameter values for the associated parameter code, press **Down** or **Up**.
- With the preferred parameter value displayed, press **MENU** to save the value and go to the next parameter code screen.

Note: If you do not press **MENU** to save a new value, the control reverts to the last saved value. After 30 seconds of inactivity while in any screen, the control reverts to the Main screen.

Basic menu

- Use the Basic menu to quickly edit the On and OFF temperature values, as well as the Sensor Failure Mode (SF) and the Anti-Short Cycle Delay (ASd) value.
- See Parameter codes and modes of operation for more information about parameter codes, usable parameter values, and default values.

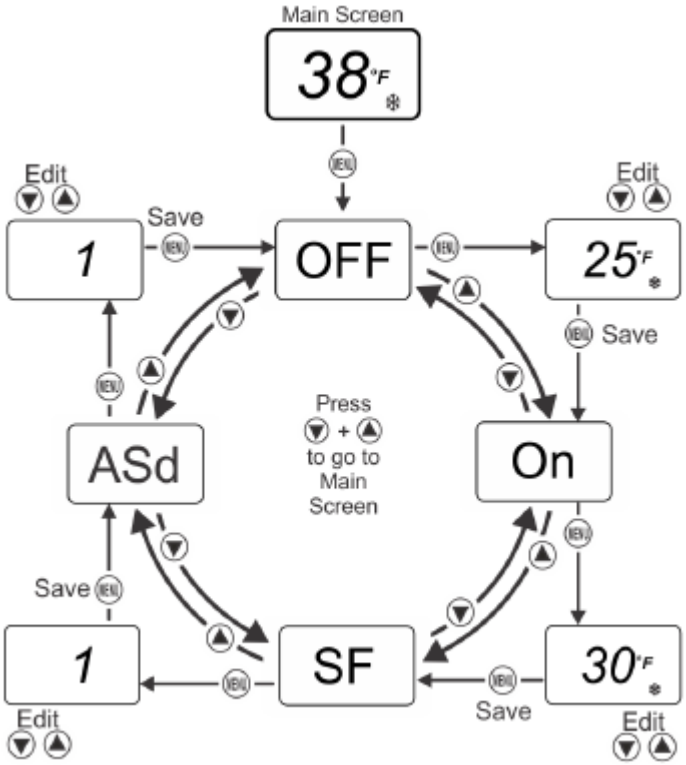

Viewing and changing values in the Basic menu

- To access the Basic menu and view and change the Basic parameter values, complete the following steps:

    1. On the Main screen, press **MENU**. The LCD displays **OFF**, which is the first parameter code screen displayed in the Basic menu.
    2. To scroll through all of the basic parameter codes and display the preferred code, press **Down** or **Up**.
    3. With the preferred parameter code displayed, press **MENU** to display the current parameter value for the code.
    4. With the current parameter value displayed, press **Down** or **Up** to scroll through all of the parameter's usable values and display the preferred value.
    5. With the preferred parameter value displayed, press **MENU** to save the displayed value and go to the next parameter code.
    6. To exit the Basic menu and go to the Advanced menu, simultaneously press and hold **Down** or **Up** for 5 seconds.

Advanced menu

- You can use the Advanced menu to change the parameter values in the Basic menu and the parameter values for the following advanced parameter codes:

    1. Temperature Units (**Un**)
    2. Low Temperature Setpoint Stop (**LtS**)
    3. High Temperature Setpoint Stop (**HtS**)
    4. Anti-Short Cycle Delay (**ASd**)
    5. Defrost Cycle Time (**dFt**)
    6. Defrost Interval (**dI**)
    7. Binary Input Mode (**bLn**)
    8. Backlight Brightness Level (**bLL**)
    9. Temperature Setback (**tSb**)
    10. Sensor Offset (**So**)
    11. Sensor Failure Option (**SO**)
    12. Start or Stop Defrost Cycle (**SdF**)

See Parameter codes and modes of operation for more information about parameter codes, usable parameter values, and default values.

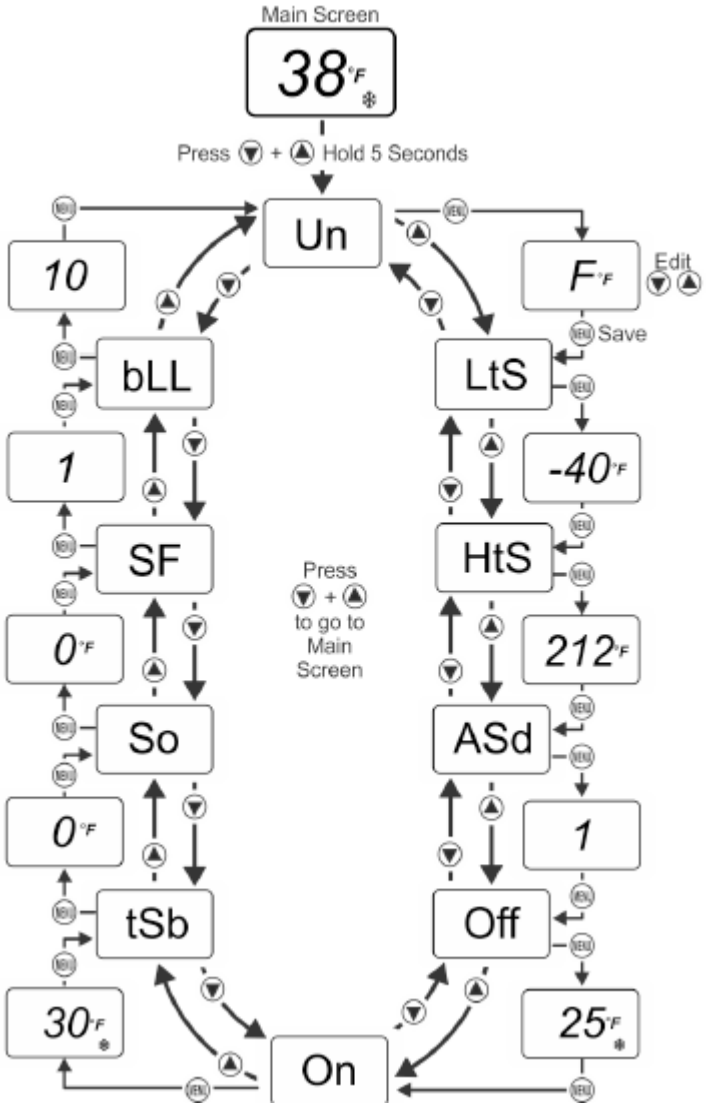

Viewing and changing values in the Advanced menu

- To access the Advanced menu and view and change the parameter values, complete the following steps:

  1. On the Main screen, press and hold **Down** or **Up** simultaneously for 5 seconds. Un displays on the LCD, which is the first parameter code screen displayed in the Advanced menu.
  2. To scroll through all of the advanced parameter codes and display the preferred code, press **Down** or **Up**
  3. With the preferred parameter code displayed, press **MENU** to display the current parameter value for the code.
  4. With the current parameter value displayed, press **Down** or **Up** to scroll through all of the parameter code's usable values and display the preferred value.
  5. With the preferred parameter value displayed, press **MENU** to save the displayed value and go to the next parameter code.

Setting up a regular or timed Defrost Off-Cycle

- The controller enforces the following behavior:
- At power up, the initial Defrost Interval (dI) does not have a Defrost Cycle (dFt).
- Subsequent defrost intervals (dI) begin with the selected dFt value.
- All defrost intervals have the same length. To set up a regular or timed defrost cycle: 1. Select a dI value between 2 hours and 24 hours.

Note: A dI value of 0 indicates no defrost interval. 2. Select a dFt value between 1 minute and 99 minutes.

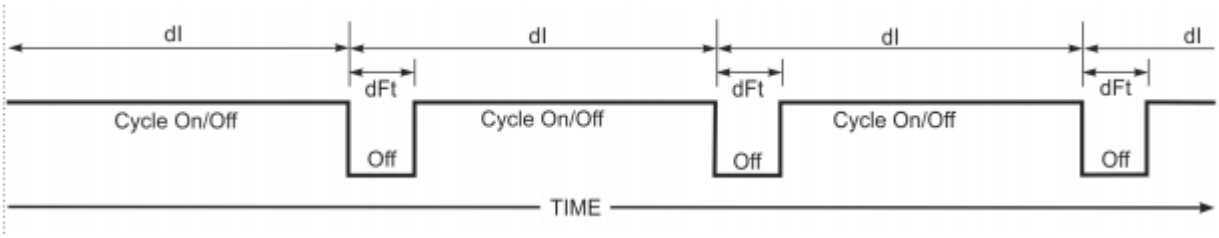

Control behavior when manually starting or stopping a Defrost Off-Cycle

- The controller enforces the following behavior:
- Manually start a Defrost Cycle. The control returns to normal On/Off operation after the defrost cycle time (dFt) is complete.
- Manually stop a Defrost Cycle. The defrost cycle time (dFt) is terminated and the control is returned to normal On/Off operation**.**

Manually starting and stopping a Defrost Cycle (SdF)

- To manually Start/Stop a Defrost Cycle (SdF):
- Select a Defrost Interval (dI) value of 0.
- Select a dFt value between 1 minute and 99 minutes.
- Select an SdF parameter value of 1 during normal On/Off operation to start a defrost cycle.
- Or, change the SdF value to 0 during a defrost cycle and return to normal On/Off operation. See the figure below.

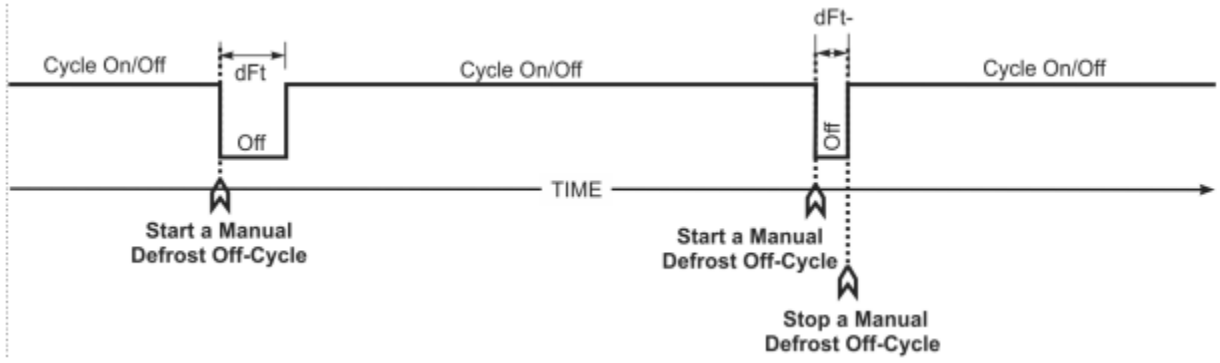

Control behavior when starting or stopping an automatically enabled Defrost Off-Cycle

- The controller enforces the following behavior:
- At power up, the initial Defrost Interval (dI) does not initiate a Defrost Cycle Time (dFt).
- A defrost cycle occurs at the beginning of each subsequent defrost interval.
- You can start or stop a defrost cycle using the SdF parameter or binary input (BIN).
- Starting a defrost cycle terminates the defrost interval (dI) and starts a new defrost cycle.
- Stopping a defrost cycle terminates the dFt and continues the current defrost interval (dI) until the start of the next regular dI and defrost cycle.

Starting or stopping a Defrost Cycle using the SdF parameter

- To start or stop a Defrost Cycle using the SdF parameter:
- Select a Start/Stop Defrost Cycle (SdF) parameter value of 1.
- Or, change the SdF value to 0 (zero) during a dFt to stop a defrost cycle and return the control to normal On/Off operation.

Starting or stopping a Defrost Cycle using the binary input (BIN)

- To start or stop a Defrost Cycle using the Binary Input (BIN):
- Connect a momentary contact switch between BIN and COM on the T3 terminal block.
- Each time the momentary contact switch is pressed, the defrost cycle starts or stops depending on whether the defrost cycle is running or not.

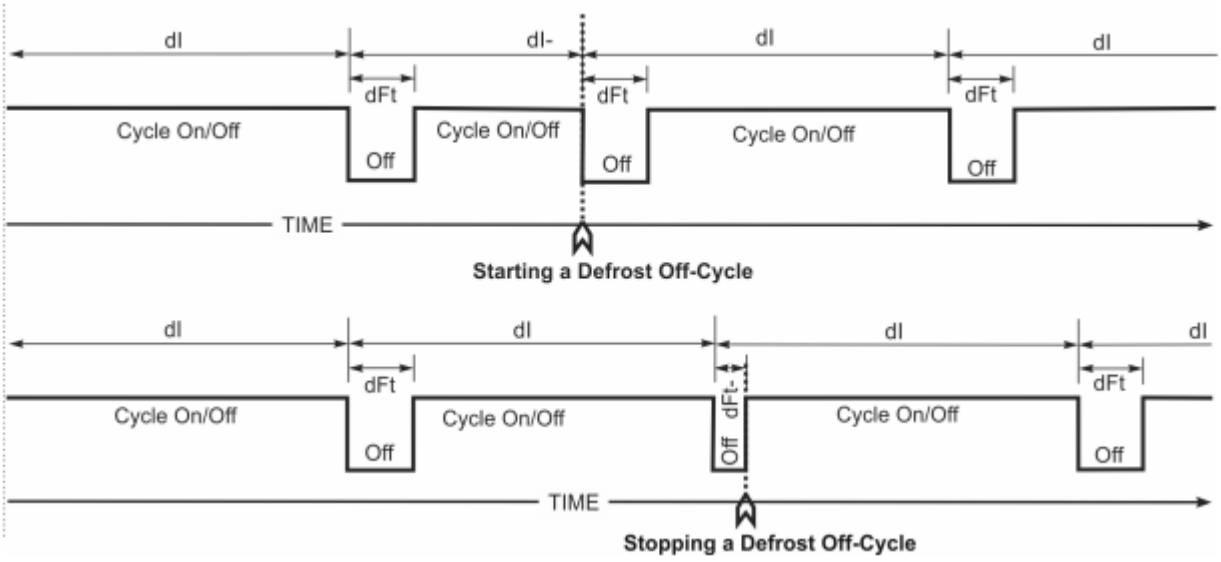

Restricting user adjustment

- You can restrict user adjustment of the A421 Control to the OFF value control band only and limit the range of this value.

- To set the A421 Control the restricted adjustment mode, position the jumper located on the circuit board next to the TB3 terminal block. See Setting the control to Restricted Adjustment mode.

Note: Setting the A421 Control up in the Restricted mode prevents casual users from over adjusting the control in your application, or from inadvertently changing the mode of operation from cooling to heating or heating to cooling by over-adjusting the On value or OFF value.

- When the A421 Control is set up in the restricted adjustment mode, the controller enforces the following behavior:

    1. The selected HtS and LtS values define the restricted temperature adjustment range.
    2. The On and OFF values define the control band differential, and the control band between On and OFF remains fixed and not adjustable.
    3. Only the OFF value can be adjusted, the control band remains fixed, and the On value automatically shifts equal to the OFF value adjustment.
    4. The OFF value can only be adjusted to values that maintain the entire control band within the restricted temperature adjustment range defined by HtS and LtS.
    5. The basic and advanced menus are not available. Only the Restricted Adjustment mode menu is available and only the OFF value can be adjusted.

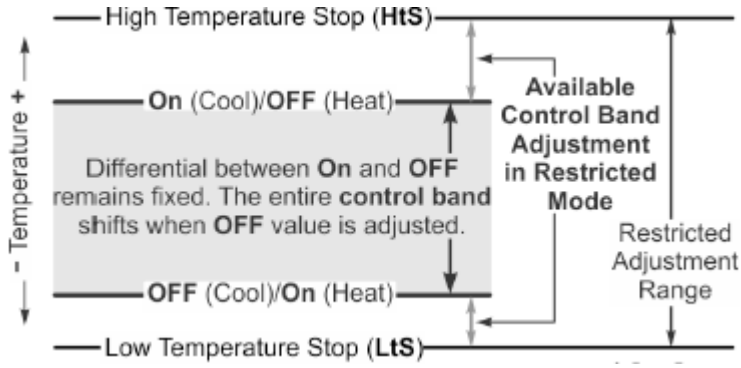

Setting the control to Restricted Adjustment mode

- To set up the restricted adjustment feature, complete the following steps:

    1. To make sure that the A421 is not in restricted mode, position the jumper on both pins.
    2. Select the OFF and On values that define the application's required control band.
    3. Change the HtS and LtS temperature values to define the restricted adjustment range.
    4. Disconnect power to the control and reposition the jumper to one pin. Reconnect power.

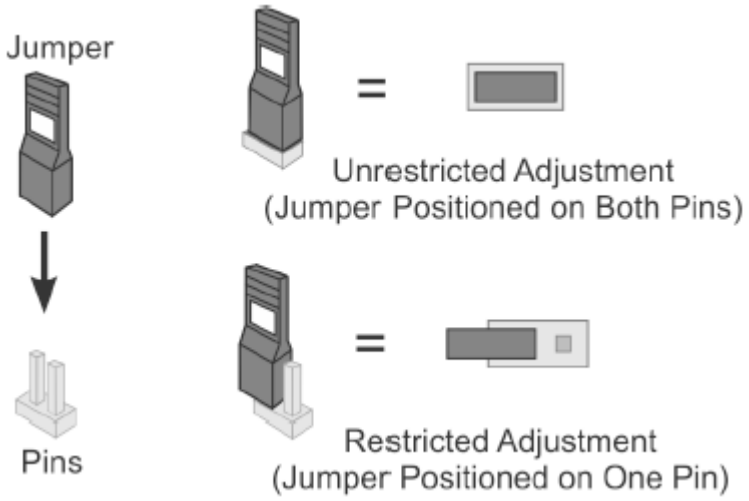

- Control adjustment is now restricted to changing only the OFF value, which shifts the On and OFF control band within the restricted adjustment range defined by HtS and LtS.

Note: To completely restrict and lockout all user adjustment on the control, set the HtS value equal to the On or OFF value and the LtS value equal to the OFF or On value. Then the (On to OFF) control band is equal to the restricted adjustment range, LtS to HtS, and the OFF value cannot be adjusted in the restricted mode.

Adjusting the control in Restricted mode

- To adjust the OFF value and shift the On and OFF control band within the restricted adjustment range, when the control is in the restricted adjustment mode, complete the following steps:

  1. On the Main screen, press **MENU** to go to the Restricted Adjustment mode menu and display the OFF parameter code screen.
  2. To go to the OFF value screen, press **MENU** again.
  3. On the OFF value screen, press **Down** or **Up** to change the OFF value within the restricted adjustment range.
  4. To save the selected OFF value and return to the OFF code screen, press **MENU**.
  5. To return to the Main screen, press **Down** or **Up** simultaneously.

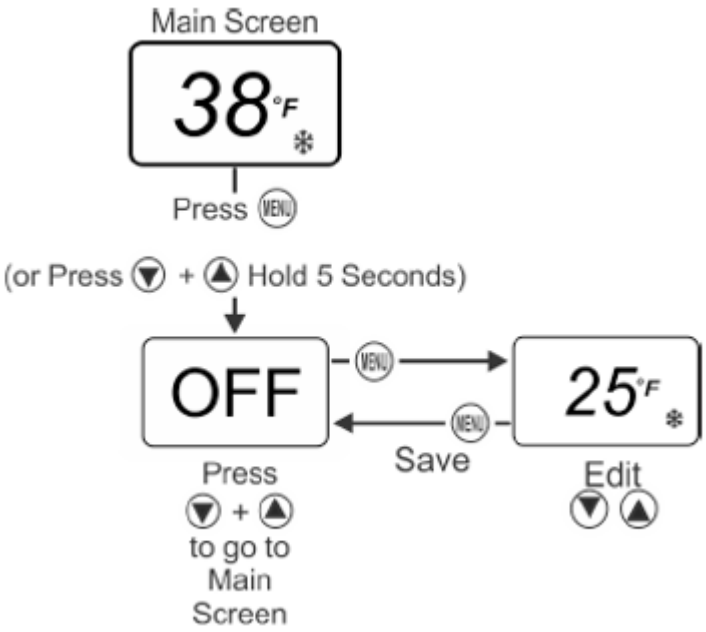

Troubleshooting

- A421 Series Controls display fault codes on the LCD as described in the following table.

Fault code	Definition	System status	Solution
SF flashing alternately with **OP**	Open temperature sensor or sensor wiring	Output functions according to the selected SF mode	See Troubleshooting procedure. Cycle power to reset the control.
SF flashing alternately with **SH**	Shorted temperature sensor or sensor wiring	Output functions according to the selected SF mode	See Troubleshooting procedure. Cycle power to reset the control.
EE	Program failure	Output is off	To reset the control, press **MENU**. If problems persist, replace the control.

Troubleshooting procedure

- Check for proper voltage to the A421 Control.

    1. To remove the cover, loosen the two captive cover screws.
    2. Use an AC voltmeter to check the voltage between the COM and 120 V or 240 V terminals on line-voltage models and the two 24 V terminals on low-voltage models. The voltage must be between:

        - 20 VAC and 30 VAC for 24 VAC applications
        - 102 VAC and 132 VAC for 120 VAC applications
        - 177 VAC and 264 VAC for 208/240 VAC applications

    3. If the voltage reading is not within the required range, check the power source and input power wires for problems.

- Check for proper sensor operation.

    1. Disconnect all power sources to the control.
    2. Use an accurate thermometer to take a temperature reading at the sensor location.
    3. Disconnect the sensor from the control.
    4. Use an ohmmeter to measure the resistance across the two sensor leads while the sensor is at the temperature taken in Step 2b.
    5. See Figure to verify that the measured temperature and resistance conform to established temperature and resistance values.
    6. If the measured values conform to the values in Figure, proceed to Step 3.
    7. If the sensor's measured resistance value is substantially different from the expected value for that temperature, check the sensor wiring. If sensor wiring is correct, replace the sensor.

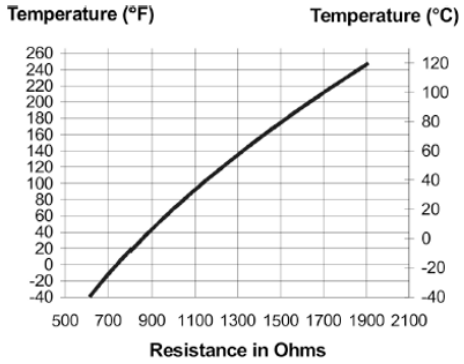

- Check the A421 for proper operation.

    1. Disconnect the load from the output relay terminals.
    2. Make sure that you install the Parameter Adjustments jumper so that you have unrestricted access to adjust parameters.
    3. Reconnect the sensor leads and supply power to the control.
    4. Replace the cover.
    5. Check the control settings for proper values.
    6. Press **MENU** until **On** appears. Press **MENU** again to display the On value.
    7. Press **Down** or **Up** to change the On temperature above and below the sensor temperature until the relay energizes and de-energizes.

Note: If the anti-short cycle delay is set to a value other than 0 minutes, when the control is powered On, on the relay does not energize until the time delay elapses.

8. If the output relay does not perform as expected, replace the A421 Control.
9. If proper operation of the A421 Control is verified, reconnect the load and consult the equipment manufacturer's instructions for troubleshooting the controlled equipment.

Electric Defrost Timer

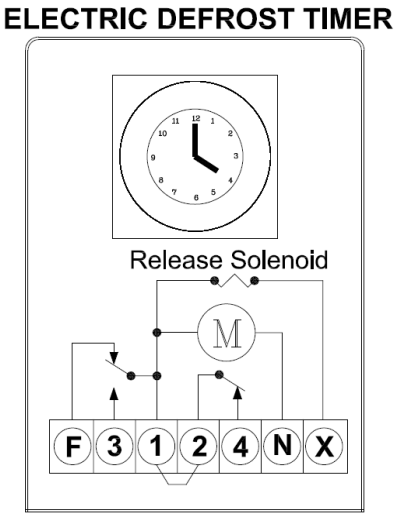

Electric Defrost Time Clock Instructions:

- Instructions for setting the timer is located on the inside cover of the time clock.
- The defrost timer clock must be set to the correct time at initial start-up and after any power interruptions.
- Set the clock by rotating the clock face until the correct time is at the arrow on the face of the timer.
- The switch is programmed by pushing the captive trippers to the inner ring for the entire period the load is to be turned "ON".
- When a tripper is pushed to the outside, the switch is in the "DEFROST" position.
- Each defrost tripper represents 15 minutes of defrost time.
- The timer is factory set for four defrost cycles daily: 4:00AM, 10:00AM, 4:00PM, and 10:00PM. Each location is different and defrost events/durations should be modified to suit each individual location.
- Each defrost cycle is programmed for 45 minutes duration.
- The defrost times may be changed to initiate at periods of low activity (trippers pushed out will close contacts to terminals 1 & 3).
- Do not install the electric defrost time clock inside of the walk-in.

***Note:** If the defrost termination thermostat fails to close, the fail safe setting on the timer will terminate the defrost cycle. The timer starts the defrost cycle automatically at the predetermined times. A setting of two to four defrost cycles per day is typical. For heavier frost loads, additional cycles may be required.*

When the defrost cycle begins:

- Switch 2 to 4 opens in the time clock, breaking the circuit to the room thermostat, liquid line solenoid, and evaporator fan motors. This allows the compressor to pump down and shut off. Simultaneously, switch 1 to 3 closes in the timer, energizing the defrost heaters.
- The heaters increase the coil temperatures above 32°F, melting the frost off the coil.
-
-

- When the coil warms to approximately 55°F, the defrost termination thermostat closes and energizes the switching solenoid in the timer. At this time, switch 1 to 3 in the timer opens, terminating the defrost heaters. Simultaneously, switch 2 to 4 closes in the time clock, energizing the temperature control circuit.
- Suction pressure rises, the low pressure control closes, and the compressor starts.
- The fan relay closes when the coil temperature reaches approximately 30°F. This energizes the fan motors.
- The system operates in the refrigeration cycle until another defrost cycle is initiated by the timer.

Section 6
Maintenance

Preventive Maintenance Tasks

Area	Task	Frequency
Evaporator	Check for proper defrosting	Monthly
	Clean the coil and drain pan	Every 6 months
	Check for proper drainage	
Condenser	Inspect /clean the coil if the air supply is near polluting sources (such as cooking appliances)	Monthly
	Clean the coil surface	Every 3 months
General	Check/tighten all electrical connections	Every 6 months
	Check all wiring and insulators	
	Check contactor for proper operation and contact point deterioration	
	Check all fan motors	
	Tighten fan set screws, and motor mount nuts and bolts	
	For semi-hermetics, check the oil level in the system	
	Check the operation of the control system	
	Make certain all safety controls are operating properly	
	Check operation of the drain line heater and examine for cuts and abrasions	
	Check/tighten all mechanical/flare connections	

⚠ CAUTION

Failure to keep the condenser coil clean will result in reduced airflow through the condenser, resulting in poor system performance and premature compressor failure.

Polyol Ester (POE) Lubricants

- Polyol Ester (POE) lubricants quickly absorb moisture from the ambient surroundings.
- POE lubricants absorb moisture more rapidly and in greater quantity than conventional mineral oils.
- Because moisture levels greater than 100 PPM will result in system corrosion and component failure, it is essential that system exposure to ambient conditions be kept to a minimum.
- If a system is left open to the atmosphere for more than 15 minutes, the liquid line drier and compressor oil must be replaced.
- Drain at least 95% of the oil from the compressor suction port.
- Measure the amount of removed oil, and replace it with exactly the same amount of new POE oil.
- Mobil EAL™ ARCTIC 22 CC is the preferred Polyol Ester lubricant because of its particular additives.
- ICI Emkarate RL 32S is an acceptable alternative when the Mobil is not available.
- These POE lubricants must be used with HFC refrigerants.
- Lubricants are packaged in specially designed, sealed containers.
- Once opened, use the lubricant immediately.
- Properly dispose of any unused lubricant.

Section 7
Troubleshooting

Evaporator Troubleshooting

Problem	Possible Cause	Corrective Action
Fan(s) will not operate.	Main switch open	Close switch
	Blown fuse(s)	Replace fuse(s). Check for short circuits or overload conditions.
	Defective motor	Replace motor.
	Defective timer or defrost thermostat	Replace defective component.
	Unit in defrost cycle	Wait for completion of cycle.
Walk-in temperature too high.	Thermostat set too high	Adjust thermostat.
	Superheat too high	Adjust thermal expansion valve.
	System low on refrigerant	Locate and repair leak, recover, evacuate and recharge.
	Coil iced up	Manually defrost coil. Check defrost controls.
Ice accumulating on ceiling around evaporator and/or on fan guards, venturi, or blades.	Defrost duration is too long	Adjust defrost termination thermostat (if adjustable).
	Fan delay not delaying fans after defrost period	Replace defective defrost thermostat.
	Defective defrost thermostat or timer	Replace defective component.
	Too many defrost cycles per day	Reduce number of defrost cycles per day.
Frost on coil after defrost cycle.	Coil temperature not getting above freezing point during defrost	Check heater operation
	Not enough defrost cycles per day	Adjust timer for more defrost cycles per day
	Defrost cycle too short	Adjust timer for longer cycle, check defrost thermostat mounting
	Defective timer or defrost thermostat	Replace defective component.
Ice accumulating in drain pan.	Defective heater	Replace heater.
	Unit not pitched properly	Check and adjust.
	Drain line plugged	Clean drain line.
	Defective drain line heater	Replace heater.
	Defective timer or thermostat	Replace defective component.

Condensing Unit Troubleshooting

Problem	Possible Cause	Corrective Action
Compressor will not run.	Main switch open	Close switch
	Fuse blown	Check electrical circuits and motor winding for shorts or grounds. Investigate for possible overloading. Replace fuse after fault is corrected.
	Thermal overloads tripped	Overloads are automatically reset. Check unit closely when unit comes back on line.
	Defective contactor or coil	Repair or replace
	System shut down by safety devices	Determine type and cause of shutdown and correct
	No cooling required	None. Wait until cooling is required.
	Liquid line solenoid will not open.	Repair or replace coil.
	Low pressure switch will not close.	Replace switch
	Motor electrical trouble	Check motor for open windings or short circuit.

Problem	Possible Cause	Corrective Action
	Loose wiring	Check all wire junctions. Tighten all terminal screws.
Compressor noisy or vibrating	Flooding of refrigerant into crankcase	Check superheat setting of expansion valve
	Improper pipe support	Relocate or add hangers
	Worn compressor	Replace compressor
High discharge pressure	Non-condensable in system	Recover, evacuate and charge
	System overcharged with refrigerant	Remove excess charge
	Discharge shut-off valve partially closed	Open valve
	Fan not running	Check electrical circuit or replace defective fan motor
	Insufficient condenser air supply	Check for cause and correct
	Dirty condenser coil	Clean coil
Low discharge pressure	Faulty head pressure control	Check head pressure control operation.
	Suction shut-off valve partially closed	Open valve
	Insufficient refrigerant in system	Locate and repair leak, recover, evacuate and recharge
	Low suction pressure	Check for proper refrigerant charge
High suction pressure	Excessive load	Reduce load or add additional equipment
	Expansion valve overfeeding	Secure and insulate TXV bulb or if required adjust superheat.
Low suction pressure	Lack of refrigerant	Locate and repair leak, recover, evacuate and charge.
	Evaporator dirty or iced	Clean
	Clogged liquid line or suction line filter-drier	Replace filter-drier
	Expansion valve malfunctioning	Check and reset for proper superheat
	Condensing temperature too low	Check head pressure control
	Improper TXV	Check for proper sizing

Problem	Possible Cause	Corrective Action
Compressor loses oil	Lack of refrigerant	Locate and repair leak, recover, evacuate and recharge
	Excessive compression ring blow-by	Replace compressor
	Refrigerant flood back	Maintain proper superheat at compressor
	Improper piping or traps	Correct piping
Compressor thermal protector switch open	Operating beyond design	Add facilities so that operating conditions are within allowable limits
	Discharge valve partially shut	Open valve
	Dirty condenser coil	Clean coil
	Overcharged system	Correct charge

Notes:

System Start-up Checklist

Date System Installed: _____/_____/_____
Installer and Address: _____

_____

Phone Number: (_____) _____-_____

Start-Up Service Agency: _____

_____

Phone Number: (____) _____-_____

Freezer Condensing Unit				
Inspection Feature	**Data**	**Accept**	**Reject**	**Action Required**
Model Number:				
Serial Number:				
Electrical Volts:				
Electrical Phase:				
Amperage @ L1:				
Amperage @ L2:				
Amperage @ L3:				
Ambient Temp:	°F			
Comp. Discharge Pressure:	PSIG			
Comp. Suction Pressure:	PSIG			
Suction Line Temp @ Comp.:	°F			
Discharge Line Temp @ Comp.:	°F			
Comp. Superheat:	°F			
Defrost Setting (4 day/45 min):				
All electrical connections are tight:				
Unit base properly supported:				
Fans Running & No Vibration:				
All guards, covers attached:				
Refrigerant Sight Glass Clear:				
Comp. Oil Level @ ½ Sight Glass:				
Comp. Mounting Clips Removed:				
Suction line insulated fully and properly supported:				

Freezer Evaporator				
Inspection Feature	**Data**	**Accept**	**Reject**	**Action Required**
Evaporator installed with nylon bolts with proper airflow clearance:				
Model Number:				
Serial Number:				
Electrical Volts:				
Electrical Phase:				
Suction Line Temp @ Evap:	°F			
Evap Superheat:	°F			
Thermostat Set:	°F			
Operating Temp:	°F			
TXV Bulb Properly Mounted:				
All guards, covers attached:				
All electrical connections are tight:				
Defrost Heater Amp Draw:	A			

Freezer Piping				
Inspection Feature	**Data**	**Accept**	**Reject**	**Action Required**
Suction Lines Insulated:				
Oil Trap at Base of Suction Riser:				
Copper Drain Lines Sloped Min 1/2” ft:				
Piping Supported Every 5’:				
Copper drain line heater attached, working, and insulated:				
Copper Drain Line Trapped Outside Freezer Space:				

Cooler Condensing Unit				
Inspection Feature	**Data**	**Accept**	**Reject**	**Action Required**
Model Number:				
Serial Number:				
Electrical Volts:				
Electrical Phase:				
Amperage @ L1:				
Amperage @ L2:				
Amperage @ L3:				
Ambient Temp:	°F			
Comp. Discharge Pressure:	PSIG			
Comp. Suction Pressure:	PSIG			
Suction Line Temp @ Comp.:	°F			
Discharge Line Temp @ Comp.:	°F			
Comp. Superheat:	°F			
Defrost Setting (4 day/45 min):				
All electrical connections are tight:				
Unit base properly supported:				
Fans Running & No Vibration:				
All guards, covers attached:				
Refrigerant Sight Glass Clear:				
Comp. Oil Level @ ½ Sight Glass:				
Comp. Mounting Clips Removed:				
Suction line insulated fully and properly supported:				

Cooler Evaporator				
Inspection Feature	**Data**	**Accept**	**Reject**	**Action Required**
Evaporator installed with nylon bolts with proper airflow clearance:				
Model Number:				
Serial Number:				
Electrical Volts:				
Electrical Phase:				
Suction Line Temp @ Evap:	°F			
Evap Superheat:	°F			
Thermostat Set:	°F			
Operating Temp:	°F			
TXV Bulb Properly Mounted:				
All guards, covers attached:				
All electrical connections are tight:				

Cooler Piping				
Inspection Feature	**Data**	**Accept**	**Reject**	**Action Required**
Suction Lines Insulated:				
Oil Trap at Base of Suction Riser:				
Copper Drain Lines Sloped Min 1/2” ft:				
Copper Drain Lines Insulated:				
Copper Piping Supported Every 5’:				
Copper Drain Line Trapped Outside Cooler Space:				

Walk-In Freezer				
Inspection Feature	**Data**	**Accept**	**Reject**	**Action Required**
Serial Number:				
Interior Lights Installed and Working:				
All Penetrations Sealed:				
Doors/Jambs Squared and Operating Properly:				
All Panel Locks Fully Engaged:				
All Plug Buttons Installed:				
Door Heater Working:				
Door Sweeps Adjusted:				
Heat Air Vent Working:				
Door Closers Adjusted and Working:				
Wainscot and Trim Installed:				
Alarm Set and Working:				
Thermometer Bulb Mounted and Calibrated:				
Walk-In Clean (no excessive caulk, etc.)				
Walk-in at proper temperature:				

Walk-In Cooler				
Inspection Feature	**Data**	**Accept**	**Reject**	**Action Required**
Serial Number:				
Interior Lights Installed and Working:				
All Penetration Sealed:				
Doors/Jambs Squared and Operating Properly:				
All Panel Locks Fully Engaged:				
All Plug Buttons Installed:				
Door Heater Working:				
Door Sweeps Adjusted:				
Heat Air Vent Working:				
Door Closers Adjusted and Working:				
Wainscot and Trim Installed:				
Alarm Set and Working:				
Thermometer Bulb Mounted and Calibrated:				
Walk-In Clean (no excessive caulk, etc.)				
Walk-in at proper temperature:				

Notes:

Superintendent/Customer Signature: _____ Date: _____

Service Tech/Installer Signature: _____ Date: _____

KOLPAK
2915 TENNESSEE AVE. NORTH, PARSONS, TN 38363
800-225-9916
WWW.KOLPAK.COM