ENG

VITRIFRIGO

COOL AND BEYOND

INSTRUCTION MANUAL

DC-AC FRIDGES

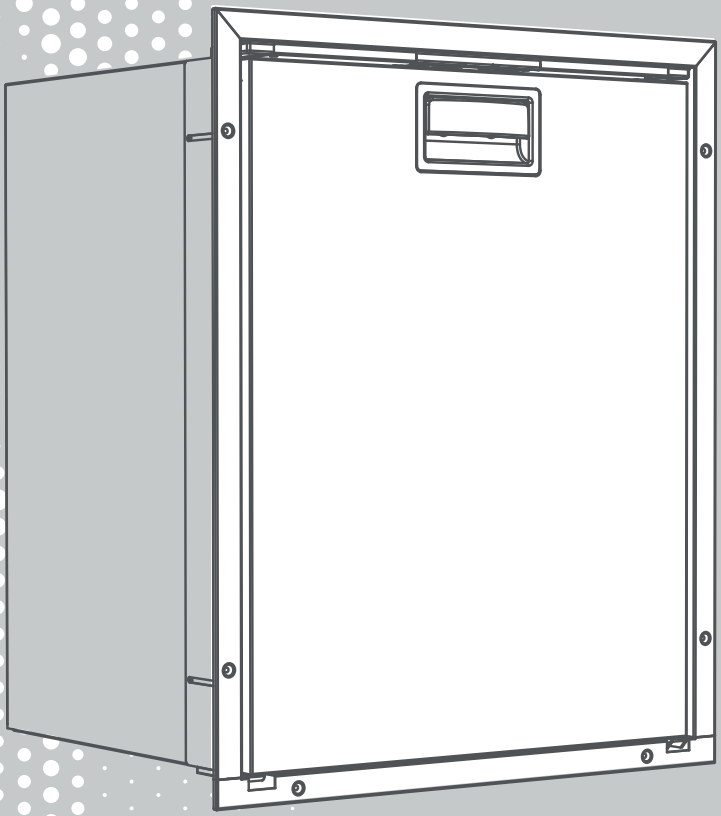

THANK YOU FOR PURCHASING A VITRIFRIGO PRODUCT

More information https://www.caravansplus.com.au

Index

1. INTRODUCTION 16

2. GENERAL WARNINGS 18
- Destination of the product 18
- Receipt 19
- Installation 19
- Maintenance and safety (all models) 20
- Disposal 21

3. PURPOSE OF THE MANUAL 21
- Identification of the manufacturer 21

4. DESCRIPTION OF THE APPLIANCE 21

5. INSTALLATION 22
- Recessing of the appliance with static condenser 22
- Appliance recessing with ventilated condenser 23
- Appliance recess, with ventilated remote motor 24
- Appliance recess for campers, caravans and motor-homes 24
- Fixing the appliance 24

6. ELECTRICAL CONNECTION 25

7. START-UP 26

8. FUNCTIONALITY AND ADJUSTMENT OF THE TEMPERATURE 26

9. EXTRAORDINARY MAINTENANCE AND ASSISTANCE 27
- Cleaning the refrigerator 27
- Defrosting the appliance 27
- Replacing and reversing the door 28
- Total/Partial recess profile assembly 28
- Replacing the door panel 28
- Replacing the LED light profile 28

10. TROUBLESHOOTING GUIDE 29

ANNEXES 72

More information https://www.caravansplus.com.au

Dear client, thank you for choosing one of our products.
Vitrifrigo hopes that you will be completely satisfied with your purchase.
This manual is considered an integral part of the refrigerator and must follow the sales path to the user. The same can be consulted on the Vitrifrigo website www.vitrifrigo.com. Each refrigerator, before being shipped, is thoroughly checked and tested to ensure it operates correctly. For more information or for any clarification, please contact one of our service centres or any of our offices directly.

Vitri Alceste

Models

C25L	C85I	C30BTL	TL20L
C39I	C90I	C35BTL	TL37L
C42L	C95L	C55BTL	TL40L
C50I	C115I	C110BTL	TL43L
C51I	C130L		TL160L
C60I		LT45I	TL180L
C62I	DP150I	LT75I	
C75L	DP2600I		

2. GENERAL WARNINGS

- The manual refers to the C series models.
- For a full list of the models and their sizes refer to Annex 1.
- Read this manual carefully before using the refrigerator.

ATTENTION (for versions with R600a Isobutane Refrigerant only): risk of fire. The appliance contains inflammable gas.

ATTENTION Keep ventilation openings in the appliance's casing or in the recess free from obstruction,

ATTENTION Do not use mechanical devices or other means other than those recommended by the manufacturer to accelerate the defrosting process.

ATTENTION Do not damage the refrigerant circuit.

ATTENTION Do not use electrical appliances or devices inside the food storage compartments if these appliances or devices are not of the type recommended by the manufacturer.

Destination of the product:

More information https://www.caravansplus.com.au

- This appliance is designed for use in applications such as:
  - kitchen areas for personnel in shops, offices and other work environments.
  - By customers of farms, hotels, motels and in other residential environments.
  - Bed and Breakfast establishments.
  - In catering services and similar applications but not for retail purposes.
  - In camper vans, caravans and on pleasure craft.
- Whenever this refrigerator should replace an old type, it is recommended to make any lock unusable before scraping it.
- This appliance may only be used with recessed installation.
- Respect the indications of the key present on the cover (letters I / L present in the model code) for correct installation of the appliance.
- Follow the installation instructions given in this manual carefully.
- It is absolutely prohibited to use the refrigerator for any use other than those intended.
- This appliance is not designed for direct contact with food
- The appliance may be used by children aged 8 and older and by people with reduced physical, sensory or mental abilities, and by people lacking experience or the necessary knowledge, provided that use is supervised or done after suitable instruction has been given regarding the safe use of the appliance and once there is an understanding of the danger inherent in the product and its use.
- Children must not play with the appliance.
- Cleaning and maintenance by the user must not be done by children without the proper supervision.

Receipt:

- The refrigerator must only be installed by qualified staff
- Check that the packaging is intact. If not, report it to the courier.
- Remove the refrigerator from the packaging, working with maximum care; in order to prevent accidental injury the use of safety gloves is advised.
- Check that the product has not been damaged.
- Any damage must be reported to the reseller within 24 hours of taking delivery of the appliance.

Installation:

- Install the product, taking the utmost care and caution to avoid accidentally damaging the product. Use protective gloves.
- Before connecting the refrigerator, check that the network voltage corresponds with that displayed on the equipment's identification label, or with that indicated on the

More information https://www.caravansplus.com.au

label on the compressor.

- Once installation has been completed, check that the refrigerator is not resting on a power cable.
- If the power supply cable is damaged it must immediately be replaced by the technical assistance service or by qualified personnel.
- Place the refrigerator away from heat sources, making sure that there is sufficient ventilation
- We recommend that you wait at least one hour before switching the refrigerator on, in order to allow the refrigeration circuit to be completely efficient.
- We recommend leaving sufficient space to be able to disconnect the appliance from the power supply, should the need arise.
- Series C refrigerators must be used with recessed installation.

ATTENTION: To avoid any hazard caused by the appliance being unstable, it must be fixed according to the instructions.

Maintenance and safety (all models)

- Maintenance of the refrigerator must be only be carried out by qualified staff.
- Before carrying out any maintenance or cleaning operation, disconnect the power plug.
- Keep ventilation openings free from obstructions.
- Contact a suitably qualified person to clean the ventilated condenser.
- Always carry out the inspections, checks, and scheduled maintenance described in this manual.
- Do not attempt to remove, modify or repair the refrigerator.
- For any operational problems contact the Vitrifrigo Service Centre closest to you; in any case, request the assistance of a suitably qualified person.
- Do not store explosive substances in this appliance such as aerosol cans with flammable propellant.
- The appliance must not be cleaned with a jet of water.
- For appliances intended to be used at altitudes higher than 2000 m, contact the manufacturer.
- The environment in which the appliance is installed must be adequately ventilated if possible.
- If the environment, in which an appliance containing a flammable refrigerant is used, is not ventilated, the environment must ensure that, should any gas leak, it cannot reach a concentration such as to cause a fire or explosion as a result of a heat source

More information https://www.caravansplus.com.au

(electric heating appliances or similar)..

Disposal

- Do not throw the packaging used for your appliance away. Separate the materials according to local waste disposal regulations.
- This product must not be disposed of with municipal waste but must be disposed of separately.
- Contact your nearest Waste Electrical and Electronic Equipment (WEEE) collection centre or take it to a retailer when purchasing a new, equivalent appliance.
- The symbol to the side indicates that the refrigerator must not be disposed of as urban waste.
- Improper disposal or incorrect use of the refrigerator is subject to administrative and/or penalties imposed by current legislation.



3. PURPOSE OF THE MANUAL

This manual, referring to C series refrigerators, is intended as a guide to the appliance's proper use and maintenance. In order to learn how to operate and use the refrigerator, you must read this manual carefully.
In this manual the operations related to the following are provided:
installation, operation, maintenance.
The refrigerator has been manufactured to comply with all the safety requirements given by legislation and regulations. Nevertheless, the user's utmost safety depends on carefully reading this manual and on regular and careful cleaning and maintenance.
Some information or diagrams in this manual may show details or particular aspects that might differ slightly from the refrigerator that you have purchased. The essential information, however, remains the same. Depending on the constant improvement of models, this refrigerator may show variations that are not covered in this manual.
Any modifications will appear, depending on the need, in future versions of the manual.

Identification of the manufacturer

The refrigerator has been design and manufactured exclusively by:

Vitrifrigo s.r.l.
Via Mazzini 75 - fraz. Montecchio - 61022 VALLEFOGLIA(PU) – Italy
tel. +39 0721 154500 - fax. +39 0721 497739
e-mail info@vitrifrigo.com - www.vitrifrigo.com

More information https://www.caravansplus.com.au

4. DESCRIPTION OF THE APPLIANCE (fig.1)

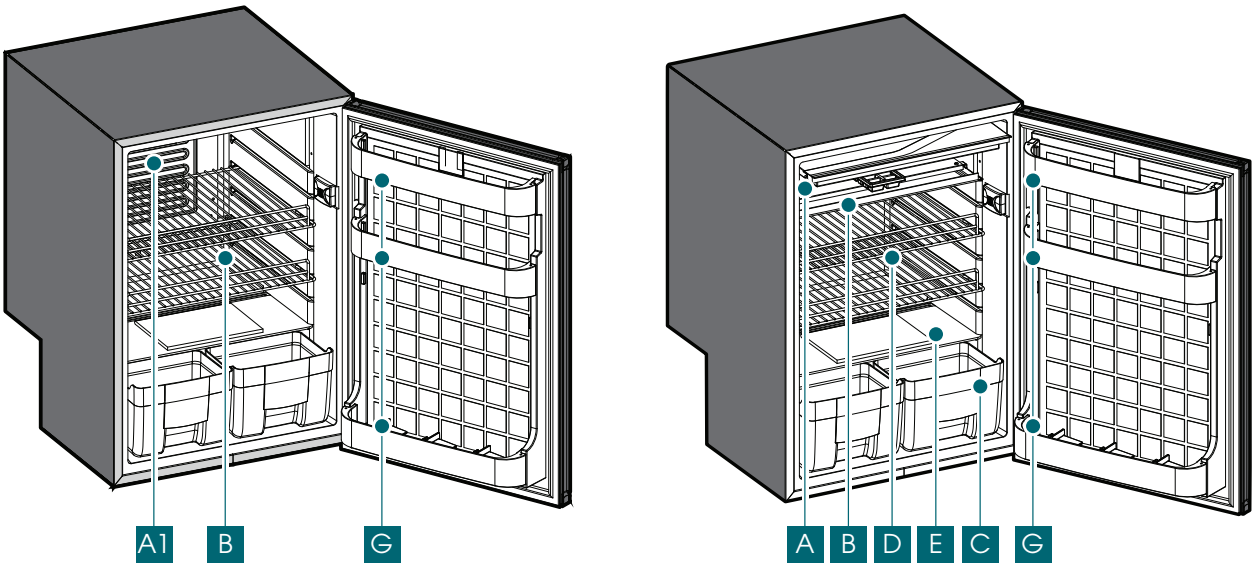

A) horizontal evaporator	C) thermostat box	F) fruit drawer (*)
A1) vertical evaporator	D) removable grilles	G) door shelves (removable)
B) drip tray	E) glass shelf (*)	

(*) only in some models

The label showing the serial number and the technical data is placed inside the refrigerator. The first four digits of the serial number identify the year and the week of manufacture.

5. INSTALLATION

Installation key: the presence of the letters I and L in the model code indicate the version relating to the type of installation envisaged

I = version with internal motor for recessing
L= version with remote motor for recessing
(e.g. C130L = C130 model code letter L recess version)

Ensure that the refrigerator is not damaged when opening the packaging after receiving the product. Any transportation damage must be reported promptly to the reseller and, in any case, within 24 hours of taking delivery of the appliance.
Handle the product with the utmost care and attention.
When positioning the refrigerant unit (in refrigerator models with a remote refrigerant system), take precautions to avoid obstructions and breaking the connection pipes.
Always position the refrigerator and the remote refrigerant unit (in the versions with such a solution) on a horizontal surface that can support the weight of the appliance and its

More information https://www.caravansplus.com.au

eventual contents. Once installation has been completed, check that the refrigerator is not resting on a power cable. If the power cable is damaged, it must be replaced immediately by someone from the technical service centre or by someone suitably qualified, in order to avoid any risk.
Place the refrigerator away from heat sources ensuring that it has enough ventilation as in the following installation examples.
Once the refrigerator has been positioned, wait at least one hour before switching it on.

Recessing of the appliance with static condenser

The dimensions of the front opening envisaged for recessing the appliance must respect the dimensions of the refrigerator and, in order to guarantee stability, must allow for the correct assembly of the fixing frame installed (see annex 1).
The recess must respect the minimum distances between the appliance and the surrounding structure and it must have suitable ventilation openings communicating directly with the free space in the room, in order to obtain correct air circulation by means of the chimney effect, as indicated in annex 2 - figure 1.
The recess must ensure that no electrically live part of the appliance is directly accessible (thermostat, control unit and fan), equipping them with appropriate grilles, just like the ventilation openings.
The grilles must have openings with max. dimension of 5 mm.
The ventilation openings must have minimum dimensions of at least 75 mm in height and not less than the dimension of the refrigerator in width if positioned above or below the appliance (anx.2 - fig.1), or not less than 120mm in height and the dimension of the refrigerator in width if positioned behind. (anx.2 - fig.1)
The minimum distances between the various parts of the appliance and the recess structure must not be less than 75mm. (anx.2 - fig.1)
For recess situations in spaces where the minimum distance of 75mm is respected only in the rear part of the appliance, make the ventilation openings on the same side respecting the indications for the position, number and dimensions shown in fig.1.
For recess situations with the presence of shelves in contact with the upper and lower parts of the appliance, make the ventilation openings above and below the appliance or in the rear part as shown in fig.1.
In all the situations of the described ventilation openings, only the minimum distance of 75mm from the sides of the appliance may not be observed.

Appliance recessing with ventilated condenser

The size of the front opening to be prepared for recessing the appliance must respect the dimensions of the refrigerator (see annex 1).

More information https://www.caravansplus.com.au

The recess must respect the minimum distances between the appliance and the surrounding structure and it must have suitable ventilation openings communicating directly with the open space in the room, in order to obtain correct air circulation by means of the chimney effect, as indicated in annex 2 - figure 2
The recess must ensure that all possible live parts of the appliance are not directly accessible as well as the ventilation openings, by fitting them with suitable grilles.
The grilles must have openings with max. dimension of 5 mm.
The envisioned ventilation openings are:

1. with dimension no less than 120 mm in height for the dimension of the refrigeration in width if positioned behind, which must always be associated to another opening of at least 120x12 mm positioned on the side of the condenser (anx.2 - fig.2).

2. of dimensions 120x120mm if positioned on both sides, as indicated in annex 2 - fig.2

La distanza minima tra le varie parti dell'apparecchio e la struttura di incasso non deve essere inferiore a 75mm. (anx.2 - fig.2)
For recess situations in spaces where the minimum distance of 75mm is respected only in the rear part of the appliance, make the ventilation openings on the same side respecting the indications for the position, number and dimensions shown in fig.2.
For recess situations with surfaces in contact with the upper and lower parts of the appliance, make the ventilation openings at the top and bottom of the appliance as indicated in fig.2.
In all the situations of the described ventilation openings, only the minimum distance of 75mm from the sides of the appliance may not be observed.

Appliance recess, with ventilated remote motor.
The size of the front opening to be prepared for recessing the appliance must respect the dimensions of the refrigerator (see annex 1).
The recess must respect the minimum distances between the remote motor and the surrounding structure and it must have suitable ventilation openings communicating directly with the open space in the room, in order to obtain correct air circulation by means of the chimney effect, as indicated in annex 2 - figure 3
The recess must ensure that all possible live parts of the appliance are not directly accessible as well as the ventilation openings, by fitting them with suitable grilles.
The grilles must have openings with max. dimension of 5 mm.
The ventilation openings must have dimensions no smaller than 120x120 mm and positioned on both sides, as per figure 3.

More information https://www.caravansplus.com.au

Appliance recess for campers, caravans and motor-homes.

To install the refrigerator or fridge units in a caravan, camper van, motor home etc. make the recess space in the vehicle with ventilation vents directly on the outside, fitted with suitable grilles to ensure that all possible live parts of the appliance are not directly accessible (thermostat, electronic module and fan).

The grilles must have openings with max. dimension of 5mm and be on at least one side (see annex 2 fig. 1-2-3).



ATTENTION Keep ventilation openings free from obstructions in the recess. Do not place any objects or other materials near the ventilation grilles, nor cover or block them.

Fixing the appliance.

To secure the appliance in the recessed area, use the holes on the front base or the internal bushings of the refrigerator and screws or the special fixing frame if present (see annex 3).

6. ELECTRICAL CONNECTION

ATTENTION (only for models with alternating current):

The operator must be able to disconnect the appliance from the mains electricity.

Make sure that there is an access point to the mains electricity and/or that the plant has a 6A differential magnetothermal switch with minimum 3 mm opening of the contacts.

Before connecting the product, make sure that the voltage corresponds to that shown on the identification label or that shown on the label on the compressor.

IMPORTANT: by law, the appliance must be grounded. Make sure that the grounding system for the electrical network is working perfectly.

We accept no responsibility whatsoever for any injury to people or damage to property deriving from the failure to properly comply with this regulation.

The use of adaptors, multiple sockets and extension cords is not recommended.

In the event that the appliance's plug and the socket are not compatible, replace the plug with a suitable one.

This operation must be done by a suitably qualified person who must ensure that the cable section of the plug is appropriate to the power absorbed by the appliance.

Do not interconnect any other type of appliance to the refrigerator.

ELECTRIC CONNECTION FOR 12-24Vdc and 12-24 Vdc / 100-240 Vac 50/60Hz models

It is recommended to connect the 12Vdc or 24Vdc power supply line directly to the battery by following the corresponding instructions of the supplied control unit (see annex 4).

More information https://www.caravansplus.com.au

Prepare the alternating current power supply line using three-pole cable with minimum section per wire of 1 mm2 and suitable isolation for the methods and environment of use and compliant with the regulations in force.
Make the connection to the AC power line by means of a plug connection with an adequate flow rate compliant with current regulations or prepare an omnipolar magnetothermal differential switch with a capacity of 6 amps and with contact opening of at least 3 mm or nevertheless in compliance with current regulations.
Once installation has been completed, check the continuity of the earth circuit and carry out all the electrical safety tests provided for by current regulations.
Protect and lock the cables in order to prevent accidental pulling of the cable from disconnecting it from the connections or coming into contact with hot parts with a temperature above 50°C or with sharp parts.
It is recommended that the installation of the power supply lines is carried out by qualified personnel who will check the compliance of the unit with the regulations in force and issue the relative certifications of conformity.

STANDARD BATTERY PROTECTION SETTINGS

12 V cut- out V	12 V cut- in V	24 V cut- out V	24 V cut- in V
12 V stacco V	12 V attacco V	24 V stacco V	12 V attacco V
10.4	11.7	22.8	24.2

CABLE DIMENSIONS: CONNECTION BETWEEN THE BATTERY AND ELECTRONIC UNIT

Section (mm^2)	2.5	4	6	10
Max. length m line at 12V	2.5	4	6	10
Max. length m line at 24V	5	8	12	20

7. START-UP

Once the plug is connected to the power outlet, the fridge will start-up automatically in thermostat mode and no further operations are required for its correct operations.

For a reasonable arrangement and storage of food follow the table below:

More information https://www.caravansplus.com.au

Food	Preservation time	Method of preservation	Position in fridge
Clean meat and fish	2 or 3 days	Exclusively wrapped or closed in airtight containers and placed in the fridge after they have cooled down if previously heated	On the grille/shelf under the freezer area
Eggs	1 month		Use the door compartments
Butter or margarine	1 week		Use the door compartments
Cooked foods, cakes and soups	3 or 4 days		On the grille in the lowest part of the refrigerator
Cold cuts, fresh pasta, creams, puddings, chocolate, pastries, animal fats	3 or 4 days		On any grille/shelf
Water and beverages			Use the door compartments
Fruit and vegetables			In the vegetable drawer, in the lower part of the refrigerator

8. FUNCTIONALITY AND ADJUSTMENT OF THE TEMPERATURE

This refrigerator (all models) is equipped with a mechanical thermostat for automatic temperature maintenance and for automatic defrosting.

The refrigerator is already factory set at the best operating temperature.

To regulate the temperature, turn the knob positioned inside the fridge, in a clockwise direction (towards "MAX") in order to lower the temperature, and in an anti-clockwise direction (towards "MIN") to increase it.

9. EXTRAORDINARY MAINTENANCE AND ASSISTANCE

Cleaning the refrigerator

Before starting to clean the refrigerator, make sure it is not connected to the mains electricity.

OUTSIDE

Wash the outside of the refrigerator with lukewarm water, rinse with cold water and dry with a soft cloth. Do not use abrasive or aggressive products.

Cleaning and maintenance of the condenser must be performed only by authorised after-sales staff.

INSIDE

Remove the internal shelves, grilles (or the rack), the containers and the ice trays and proceed with cleaning using lukewarm water with bicarbonate of sodium or vinegar.

Rinse and dry carefully with a soft cloth.

Completely avoid the use of abrasive products, detergents or soaps. in order to avoid the formation of mould or unpleasant smells, unplug the appliance, empty it and clean the inside and leave the door half open.

More information https://www.caravansplus.com.au

If the refrigerator will not be used for a long time, disconnect it from the electrical power supply, empty it out completely, clean it and leave the door in the "Vent Position"(*).



Defrosting the appliance

It will be necessary to defrost the refrigerator every often when the frost builds up to a thickness of more than three millimetres. This operation is necessary in order to guarantee that the fridge works efficiently and to avoid increasing the electricity consumption. In order to achieve complete defrosting of the refrigerator turn the thermostat control to the stop position. Keep the door open so that the defrosting time is quicker.

ATTENTION: Do not use mechanical devices or other means other than those recommended by the manufacturer to accelerate the defrosting process.

ATTENTION: Do not remove the layer of frost using pointed or sharp metal tools that may cause a puncture in the cooling plate with irreparable consequences for the appliance.

In the holding plate refrigerators, defrosting takes place automatically.
It is recommended to empty the drip tray daily.
Once defrosting has finished start up the refrigerator by returning the thermostat knob to the desired position.

Replacing and reversing the door

To replace the door, refer to Annex 5; to change its opening direction, refer to Annex 6.

Total/Partial recess profile assembly

To assemble the recess profile, partially unscrew the screws of the profile, sliding it flush with the door or flush with the casing and tighten the screws again.

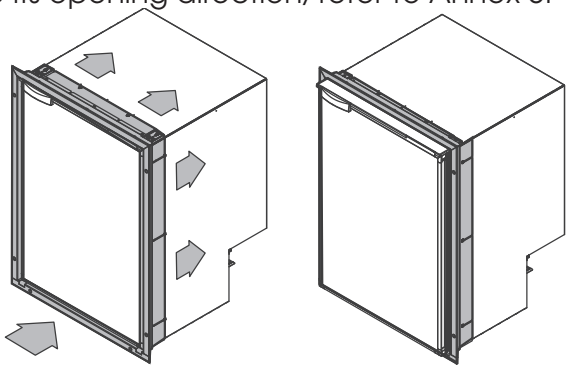

Replacing the door panel

Remove the door following the instructions given in Annex 5, then follow the instructions in Annex 7.

Replacing the LED light profile

ATTENTION: Replacing the LED light must be done by a suitably qualified person who is able to adopt all the appropriate safety measures. Before replacing the light, make sure

More information https://www.caravansplus.com.au

that the refrigerator is not connected to any electrical supply. If connected, unplug the appliance from the electrical supply.

To replace the LED light profile:

1. Remove, perpendicular to the base, the protective cover, being careful not to damage the fixing pins.
2. Disconnect the light's power cables.
3. Replace the LED light profile.
4. Connect the power source.
5. Replace the cover.

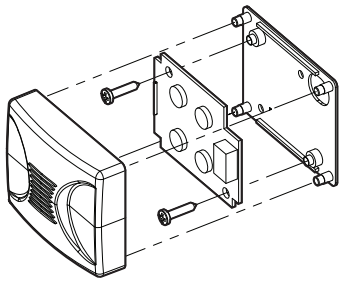

10. TROUBLESHOOTING GUIDE

What to do if the fridge doesn't work

Problem	Cause	Solution
The refrigerator does not start	No electrical current	Check that the power supply cable is intact and properly connected.
		DC mode: Check that the battery is charged
		Check that the voltage on the terminal block of the appliance's electronic device is the same as that of the battery.
	Try running a reset	Disconnect the power cable. Wait for a minute and then reconnect it.
	Thermostat in "STOP" position	Move the thermostat to the recommended position
The refrigerator does not cool	Insufficient output	Check that: (a) the door closes hermetically; (b) the refrigerator is not near heat sources and is sufficiently ventilated; (c) the condenser is not clogged with dust.
The refrigerator does not stop	The internal temperature is too high	Check that the door is completely closed
The courtesy light does not switch on	The light is faulty	Call the service centre
The refrigerator is noisy		Check that the refrigerator sits flat and is not in direct contact with any object that might cause vibrations.

If you do not manage to achieve regular operation after these checks, contact the customer assistance service.

More information https://www.caravansplus.com.au

ALLEGATI - ANNEXES

Allegato 1 Annex

MODELLI E MISURE DI INCASSO
MODELS AND RECESS MEASUREMENTS

MODEL DC/AC	A1 (mm)	B1 (mm)	C1 (mm)
C25L	439	433	322
C39I	405	548	468
C42L	395	533	454
C50I	411	438	468
C51I	395	533	519
C60I	485	623	528
C62I	485	533	554
C75L	485	623	456
C85I	500	792	464
C90I	485	623	552
C95L	500	793	466
C115I	540	768	556
C130L	540	768	560
DP150I	540	1095	565
DP2600I	595	1344	602
C30BTL	540	343	557
C35BTL	405	548	395
C55BTL	485	623	454
C110BTL	540	768	560
LT45I	390	715	475
LT75I	460	795	510
TL20L	240	540	420
TL37L	410	410	600
TL40L	400	400	590
TL43L	500	340	630
TL160L	725	526	752
TL180L	725	710	820

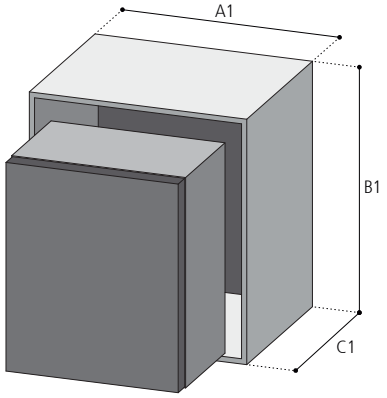

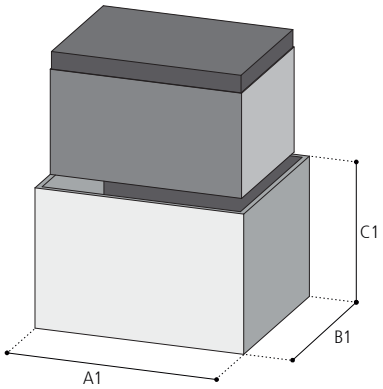

Allegato 2 Annex

INSTALLAZIONI
INSTALLATIONS

CONDENSATORE STATICO
STATIC CONDENSER

IN APPOGGIO SU
PIANO CON GRIGLIA DI
VENTILAZIONE FRONTALE

RESTING ON A SURFACE
WITH FRONT VENTILATION
GRID

H min = 120 mm

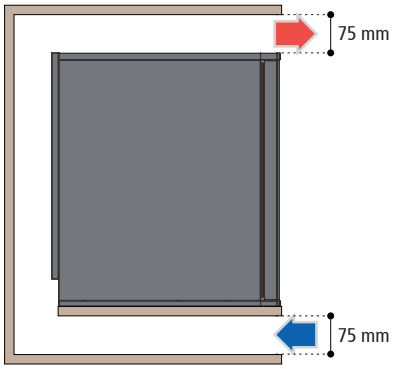

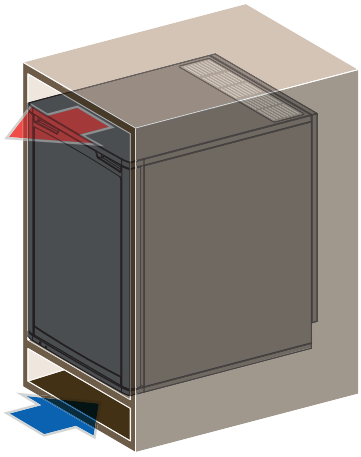

More information https://www.caravansplus.com.au

CONDENSATORE STATICO
STATIC CONDENSER

IN APPOGGIO SU
PIANO CON GRIGLIA DI
VENTILAZIONE SUPERIORE

RESTING ON A SURFACE
WITH TOP VENTILATION
GRID

H min = 120 mm

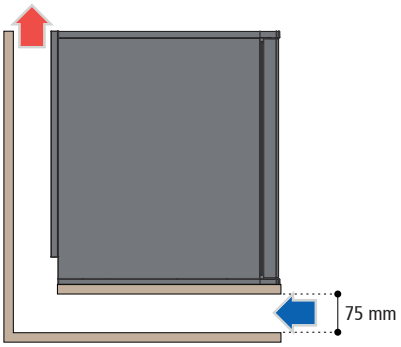

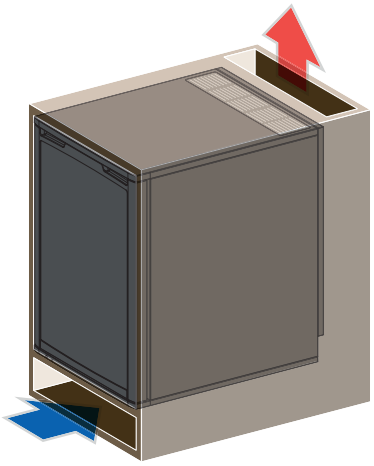

CONDENSATORE STATICO
STATIC CONDENSER

POSIZIONE GRIGLIE CON
AERAZIONE POSTERIORE

GRIDS POSITION WITH REAR
VENTILATION

H min = 120 mm

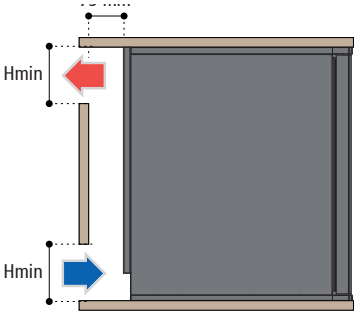

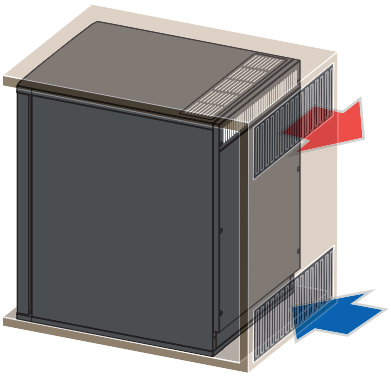

CONDENSATORE VENTILATO
VENTILATED CONDENSER

POSIZIONE GRIGLIE CON
AERAZIONE POSTERIORE
APERTURA SOLO IN BASSO

GRIDS POSITION WITH REAR
VENTILATION, DOWNWARD
OPENING ONLY

H min = 120 mm

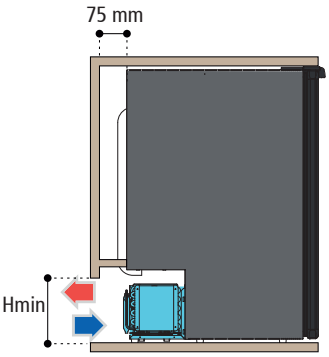

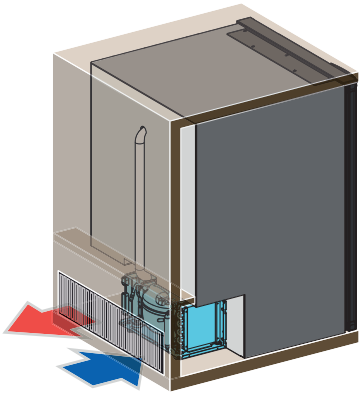

CONDENSATORE VENTILATO
FAN CONDENSER

POSIZIONE GRIGLIE CON
AERAZIONE POSTERIORE

GRIDS POSITION WITH REAR
VENTILATION

H min = 120 mm

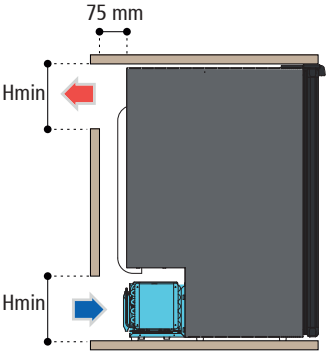

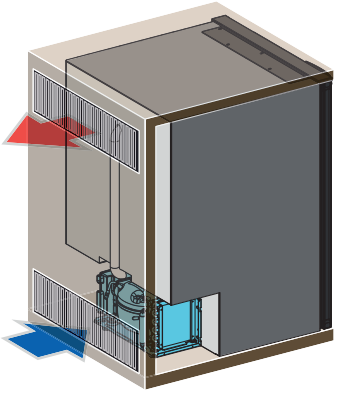

More information https://www.caravansplus.com.au

CONDENSATORE VENTILATO
VENTILATED CONDENSER

VERSIONE TOP LOADING
POSIZIONE GRIGLIE CON
AERAZIONE LATERALE

TOP LOADING VERSION,
GRIDS POSITION WITH SIDE
VENTILATION

H min = 120 mm

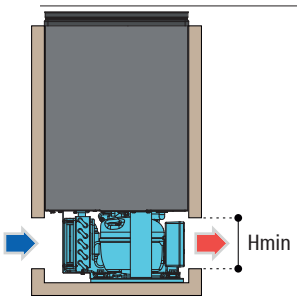

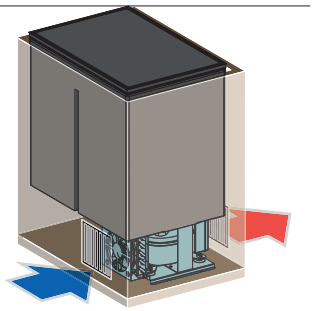

CONDENSATORE VENTILATO
UNITA' REMOTA
REMOTE UNIT
VENTILATED CONDENSER

POSIZIONE GRIGLIE

GRIDS POSITION

H min = 120 mm

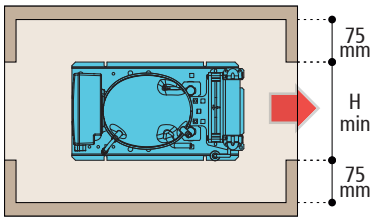

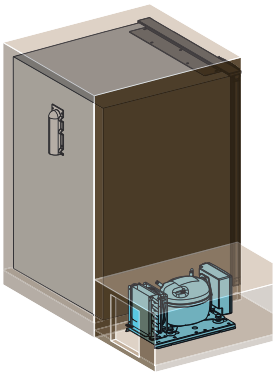

SIDE

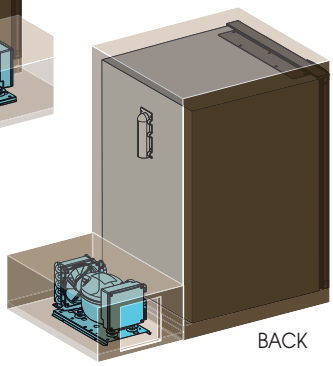

BACK

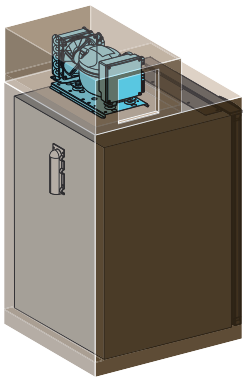

TOP

Allegato / Annex 3

FISSAGGI DISPOSITIVO
INSTALLATIONS

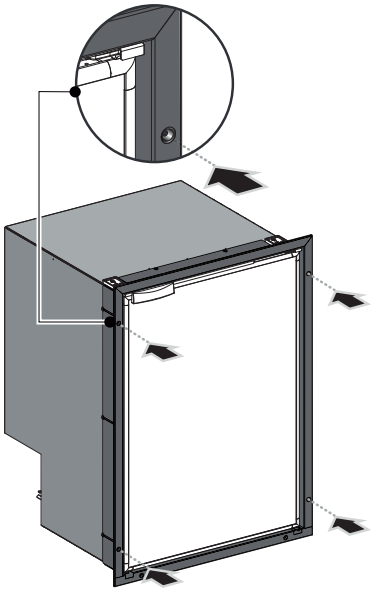

PROFILO DI FISSAGGIO
FIXING PROFILE

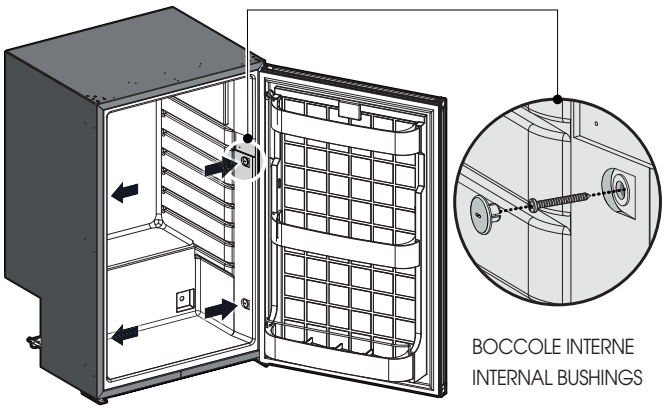

BOCCOLE INTERNE
INTERNAL BUSHINGS

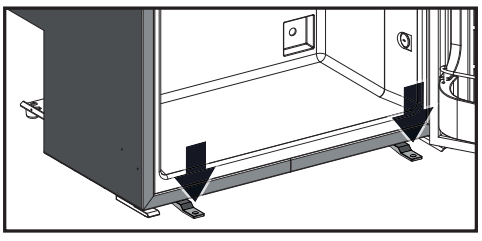

STAFFE DI FISSAGGIO
FIXING BRACKETS

More information https://www.caravansplus.com.au

Allegato 4 Annex

SCHEMA ELETTRICO
ELECTRIC SCHEME

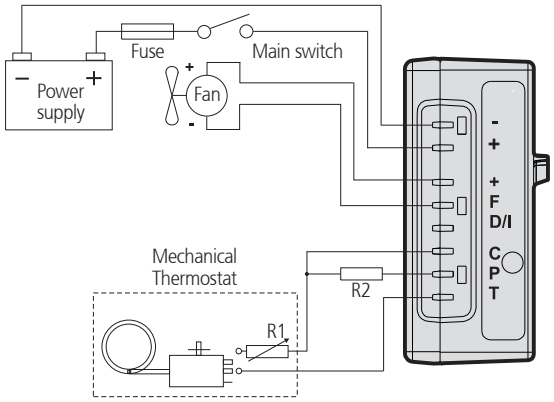

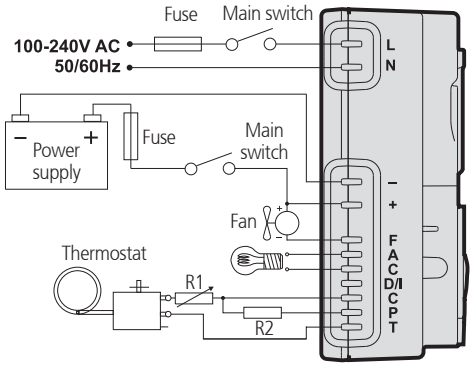

R1= speed selection - R2 = battery protection
non interface option (resistors)

UTILIZZO IN DC DC USE	FUSIBILE AUTOMOBILISTICO DIN 7258 DIN 7258 AUTOMOTIVE FUSE	12VDC: 15A 24VDC: 7.5A
	MAIN SWITCH	MIN. 20A

UTILIZZO IN DC DC USE	FUSIBILE AUTOMOBILISTICO DIN 7258 DIN 7258 AUTOMOTIVE FUSE	12VDC: 15A 24VDC: 7.5A
	MAIN SWITCH	MIN. 20A
UTILIZZO IN AC AC USE	FUSIBILE FUSE	MIN. 4A
	MAIN SWITCH	MIN. 6A

(OPTIONAL) SETTAGGI PROTEZIONE BATTERIA (R2)
OPTIONAL BATTERY PROTECTION SETTINGS (R2)

Resistor (9) kΩ	**12V cut-out** (V)	**12V cut-in** (V)	**12V max Voltage** (V)	**24V cut-out** (V)	**24V cut-in** (V)	**24V max Voltage** (V)
0	9.6	10.9	17.0	21.3	22.7	31.5
1.6	9.7	11.0	17.0	21.5	22.7	31.5
2.4	9.9	11.1	17.0	21.8	22.9	31.5
3.6	10.0	11.3	17.0	22.0	23.2	31.5
4.7	10.1	11.4	17.0	22.3	23.4	31.5
6.2	10.2	11.5	17.0	22.5	23.7	31.5
8.2	10.4	11.7	17.0	22.8	23.9	31.5
11	10.5	11.8	17.0	23.0	24.2	31.5
14	10.6	11.9	17.0	23.3	24.5	31.5
18	10.8	12.0	17.0	23.6	24.7	31.5
24	10.9	12.2	17.0	23.8	25.0	31.5
33	11.0	12.3	17.0	241	25.2	31.5
47	11.1	12.4	17.0	24.3	25.5	31.5
82	11.3	12.5	17.0	24.6	25.7	31.5
220	9.6	10.9			26.0	31.5

More information https://www.caravansplus.com.au

Allegato Annex 5

SOSTITUZIONE PORTA
DOOR REPLACEMENT

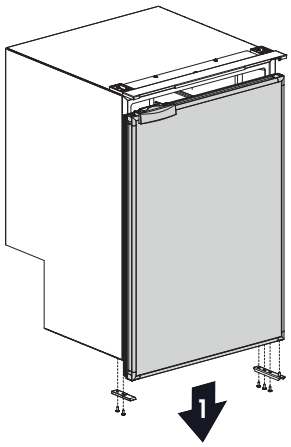

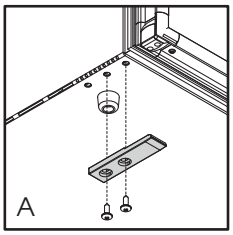

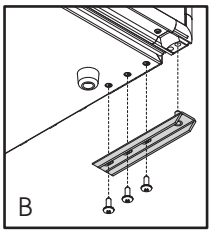

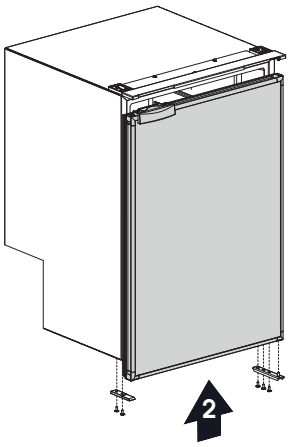

Allegato Annex 6

REVERSIBILITÀ PORTA
DOOR REVERSIBILITY

AIRLOCK

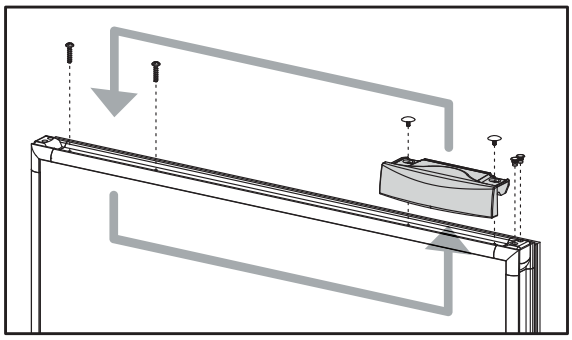

CHROMELOCK

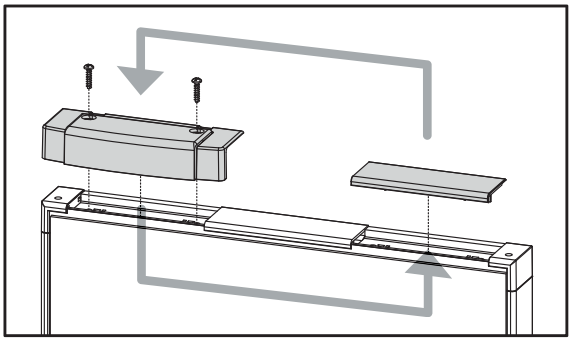

STEELOCK

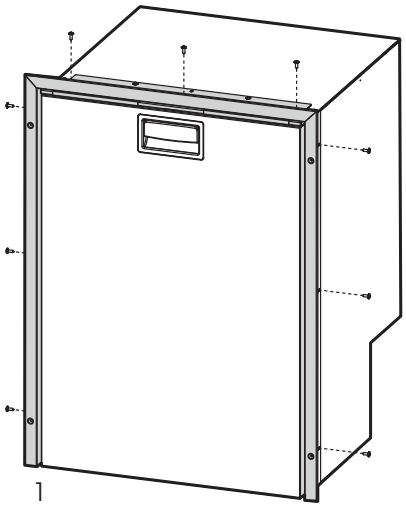

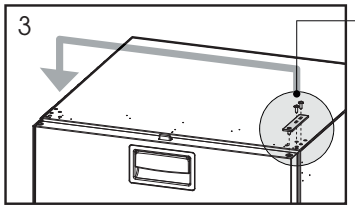

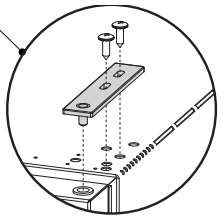

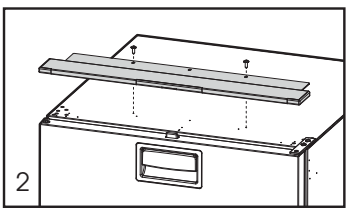

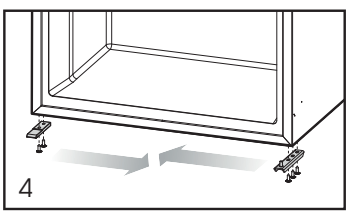

More information https://www.caravansplus.com.au

AIRLOCK

Rimuovere le viti e la base in plastica dal fondo della porta
Remove the screws and the plastic base from the bottom of the door

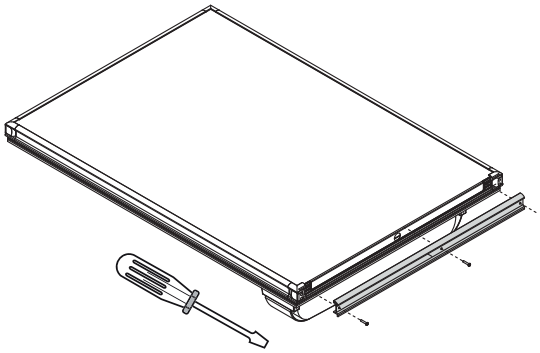

Rimuovere il pannello e sostituirlo
Remove the panel and replace it

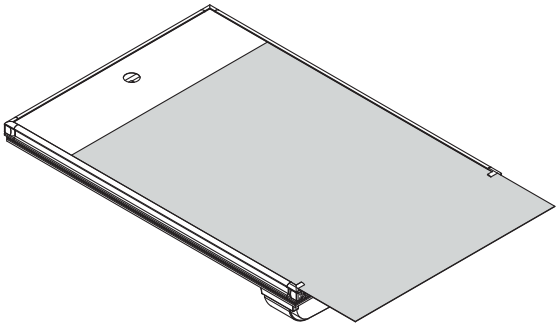

CHROMELOCK

Rimuovere la base in plastica utilizzando un cacciavite
Remove the plastic base using a screwdriver

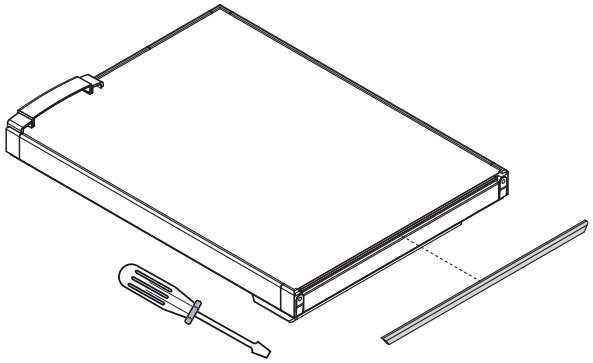

Rimuovere uno o entrambi i pannelli e sostituirli
Remove one or both panels and replace them

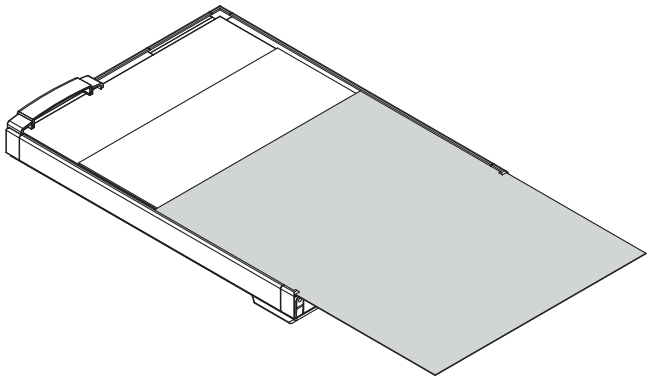

Il pannello può essere sostituito anche con un altro di diverso spessore. Lo spessore può variare da 0.8 a 3 mm.
The panel can also be replaced with one of a different thickness. The thickness can vary from 0.8 to 3 mm

STEELOCK

Rimuovere N°2 viti dal frontale inox e N°2 viti dalla maniglia.
Remove 2 screws from the stainless steel front panel and 2 screws from the handle.

Estrarre il pannello e sostituirlo.
Remove the panel and replace it

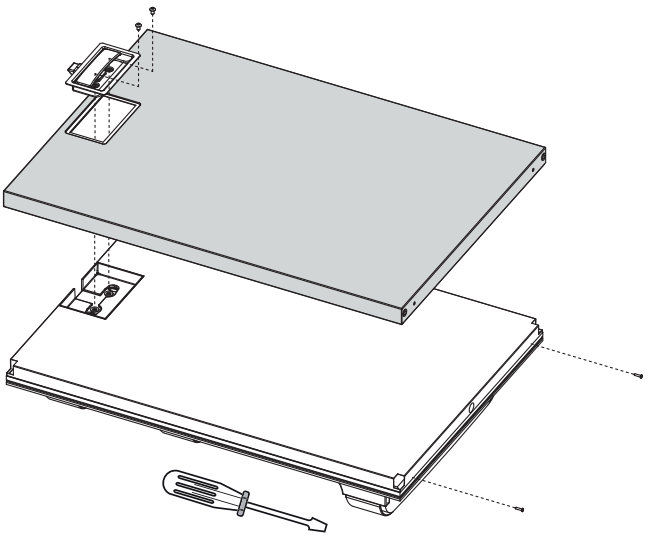

More information https://www.caravansplus.com.au

DICHIARAZIONE DI CONFORMITÀ UE

Vitrifrigo srl, con sede in:
via Mazzini 75, 61022 frazione Montecchio, VALLEFOGLIA, Italy
dichiara sotto la propria responsabilità che il prodotto:

- è conforme alla Direttiva Bassa Tensione (LVD) 2014/35 CE
- è conforme alla Direttiva Compatibilità Elettromagnetica (EMC) 2014/30 CE

UE DECLARATION OF CONFORMITY

Vitrifrigo srl, with Registered Office in
via Mazzini 75, 61022 locality Montecchio, VALLEFOGLIA, Italy
declares under its own responsibility that the product:

- is compliant with the Low Voltage Directive (LVD) 2014/35 EC
- is compliant with the Electromagnetic Compatibility Directive (EMC) 2014/30 EC

CE

VALLEFOGLIA,
GIUGNO 2021

IL LEGALE
RAPPRESENTANTE



More information https://www.caravansplus.com.au

IDENTIFICAZIONE PRODOTTO / PRODUCT IDENTIFICATION

SERIE C / C SERIES



More information https://www.caravansplus.com.au

VITRIFRIGO
COOL AND BEYOND

VITRIFRIGO S.r.l.

Via Mazzini, 75
Fraz. Montecchio
61022 Vallefoglia (PU)

tel. +39 0721.154.500
fax +39 0721.497.739

www.vitrifrigo.com

REV 00 - 2021

Made in Italy

9600-0054

More information https://www.caravansplus.com.au