Viking Use & Care Manual

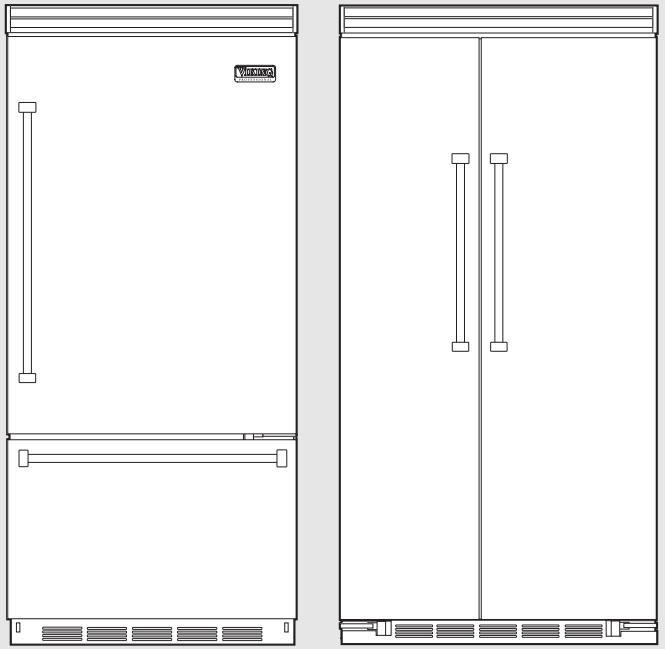

Viking Range Corporation
111 Front Street
Greenwood, Mississippi 38930 USA
(662) 455-1200

For product information
call 1-888-VIKING1 (845-4641),
or visit the Viking Web site at
vikingrange.com

Professional/Custom Panel
Built-In Refrigerator/Freezer

F20841A EN (101912)

Congratulations

Congratulations and welcome to the elite world of Viking ownership. We hope you will enjoy and appreciate the care and attention we have put into every detail of your new, state-of-the-art refrigerator.

Your Viking appliance is designed to offer years of reliable service. This Use and Care Guide will provide you with the information you need to become familiar with your refrigerator's care and operation.

Your complete satisfaction is our ultimate goal. If you have any questions or comments about this product, please contact the dealer from whom you purchased it, or contact our Consumer Support Center at 1-888-VIKING1.

We appreciate your choice of a Viking refrigerator and hope that you will again select our products for your other major appliance needs.

For more information about the complete and growing selection of Viking products, contact your dealer or visit us online at vikingrange.com.

Warnings

⚠ WARNING

To reduce the risk of fire, electric shock, or injury when using your unit, follow these basic precautions:

- Read all instructions before using the unit.
- Never allow children to operate, play with, or crawl inside the unit.
- Never clean unit parts with flammable fluids. The fumes can create a fire hazard or explosion.
- Always turn the power on/off switch (located behind the air grille on top right side) to the OFF position before attempting to change light bulbs, clean, or service the unit.

FOR YOUR SAFETY

DO NOT STORE OR USE GASOLINE OR OTHER FLAMMABLE VAPORS AND LIQUIDS IN THE VICINITY OF THIS OR ANY OTHER APPLIANCE. THE FUMES CAN CREATE A FIRE HAZARD OR EXPLOSION.

⚠ WARNING

ELECTRICAL SHOCK HAZARD



Plug into a grounded 3-prong outlet.
If a 2-prong wall receptacle is encountered, contact a qualified electrician.
Do not remove ground prong.
Unit must be grounded at all times.
Do not use an adapter.
Do not use an extension cord.
Failure to follow these instructions can result in death, fire, or electrical shock.

Your safety is important to us. This use and care manual contains safety symbols and statements. Please pay special attention to these symbols and follow any instructions given.

⚠ This symbol alerts you to hazards such as fire, electrical shock or other injuries.

Warnings

⚠ WARNING

To avoid serious illness or death, do not use unit where water is unsafe or of unknown quality without adequate disinfection before or after use of filter.

⚠ WARNING

To avoid electrical shock which can cause severe personal injury or death, turn power disconnect switch to OFF before cleaning. After cleaning, return power disconnect switch to ON position.

⚠ WARNING

ELECTRICAL SHOCK HAZARD
Disconnect power or turn power disconnect switch to OFF position before removing top grille. Failure to do so can result in death or electrical shock.



⚠ WARNING

BURN HAZARD
Do not touch condenser coils near defrost pan.
Doing so can result in burns.



⚠ DANGER

RISK OF CHILD ENTRAPMENT
Before You Throw Away Your Old Refrigerator or Freezer:
- Take off the doors.
- Leave the shelves in place so that children may not easily climb inside.

IMPORTANT: Child entrapment and suffocation are not problems of the past. Junked or abandoned refrigerators are still dangerous... even if they will sit for "just a few days."

Table of Contents

Getting Started

Important Safety Instructions ____ 6
Proper Disposal (of old refrigerator) ____ 7
Features ____ 8

Product Controls

Settings and Functions ____ 14

Operation

Refrigerator (all units) ____ 18
Freezer (all units) ____ 22
Automatic Ice Maker ____ 23
Automatic Dispenser ____ 25
Installing Water Filter ____ 26
Replacing Water Filter ____ 27
Food Storage Guide ____ 28

Product Care

Cleaning and Maintenance ____ 30
Troubleshooting ____ 39
Service Information ____ 42
Warranty ____ 43

Important Safety Instructions

- Install and level your refrigerator on a floor that will hold its weight, plus food weight (approximately 1200 pounds [540kg]) and in an area suitable for its size and use.
- Do not install a refrigeration unit near a heat source, nor in a location where the surrounding temperature will fall below 60° F (16° C).
- Do not allow your refrigerator to be exposed to the weather or outdoor elements.
- Connect your refrigerator only to the appropriate kind of electrical outlet, with the correct power supply and grounding. (Refer to the Electrical Requirements section of the Installation Instructions.)
- Use the refrigerator only for the uses described in this manual.
- Properly maintain the refrigerator.
- Be sure the refrigerator is not used by anyone unable to operate it properly.

Proper Disposal (of old refrigerator)

IMPORTANT:
Now that you have a new refrigerator, it is extremely important that you dispose of your old appliance in a way that minimizes the possibility that children will find it. There have been many cases in years past of children crawling inside junked and abandoned refrigerators and becoming trapped or suffocated.

Contact your municipal waste disposal authority to find out the best and safest way to dispose of your old refrigerator.

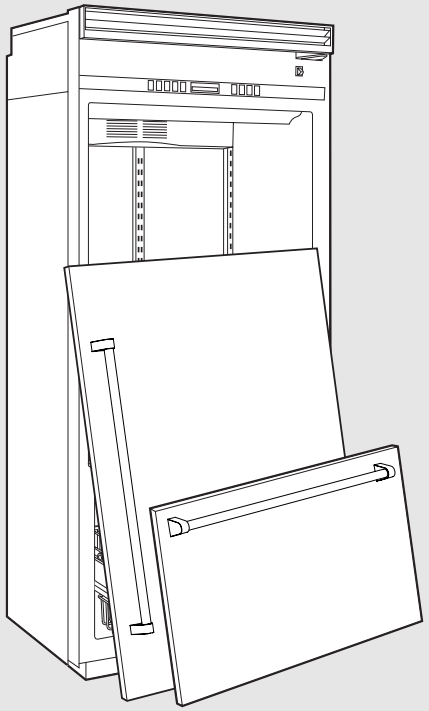

⚠ DANGER

RISK OF CHILD ENTRAPMENT
Before You Throw Away Your Old Refrigerator or Freezer:
- Take off the doors.
- Leave the shelves in place so that children may not easily climb inside.

General Features

- **ProChill™ Temperature Management System**
  The variable speed DC Overdrive™ Compressor is one of the quietest, most technologically advanced compressors available. Electronic controls with digital temperature readouts, maintain temperatures and the multi-channel airflow system and Odor Eliminator™ Evaporator remove odors and excess humidity.

- **Plasmacluster™* Ion Air Purifier**
  (all models except all freezer)
  The Plasmacluster™ Ion Air Purifier uses ions to eliminate airborne bacteria and mold spores, remove odors and enhance food preservation. Because of the unique technology, the Plasmacluster™ will continue to keep the refrigerator bateria and mold free without ever having to be replaced.

- **Adjustable Cold Zone™ Drawer**
  (all models except all freezer)
  Equipped with a separate temperature control, the Adjustable Cold Zone™ Drawer can be set for either produce or long-term fresh meat storage.

- **Adjustable Humidity Zone™ Drawer(s)**
  (all models except all freezer)
  Equipped with an adjustable humidity control, the Adjustable Humidity Zone™ Drawer(s) can be set on the high setting for leafy greens or the low setting for fruits and vegetables with skins.

- **Super Clog-Resistant™ Condenser**
  The pin and tube design of the condenser coil prevents dust and other airborne particles from clogging the condenser. Under normal operation, the condenser is maintenance-free.

- **Tru-Flush™ Design**
  Keeps items in back within easy reach and allows refrigerator to fit flush into 24" deep installation cutout (Professional Integrated, Designer and Custom Panel models).

*Plasmacluster is a trademark of Sharp Corporation.

Features (built-in all freezer)



30" W. Model Shown

1. Variable Speed DC Overdrive™ Compressor and Super Clog-Resistant™ condenser
2. Electronic Controls with digital temperature readouts
3. Wire Shelves (6)
4. Non-Adjusting Freezer Shelf (1)
5. Patented Modular Storage System
   - Gliding Ice Drawer with 2 Ice Bins
   - Gliding Freezer Baskets (2)
6. Adjustable Door Bins (Patent Pending)
   30" W. Models–
   Full-Width Bins (3)
   36" W. Models–
   Full-Width Bin (1)
   Half-Width Bins (4)
7. Lights

Features (built-in all refrigerator)

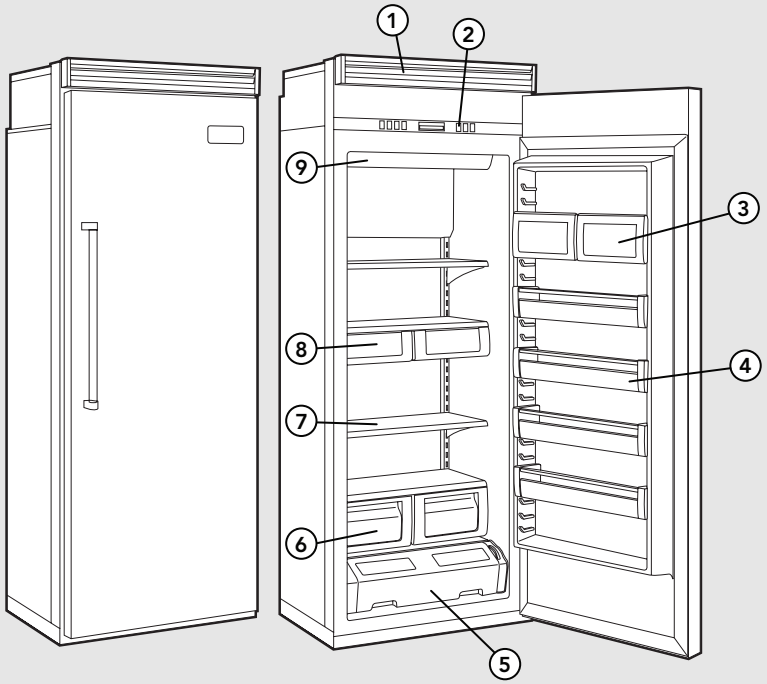

30" W. Model Shown

1. Variable Speed DC Overdrive™ Compressor and Super Clog-Resistant™ Condenser
2. Electronic Controls with digital temperature readouts
3. Dairy Compartments (2)
4. Adjustable Door Bins (Patent Pending)
   30" W. Models– Full-Width (4)
   36" W. Models– Half-Width (2) Full-Width (3)
5. Adjustable Cold Zone™ Drawer
6. Adjustable Humidity Zone™ Drawers (2)
7. Spillproof Shelves
   30" W. Models– Full-Width (4)
   36" W. Models– Half-Width (4) Full-Width (2)
8. Deli Compartment Drawers (2)
9. Lights

Features (built-in side-by-side, non-dispenser)

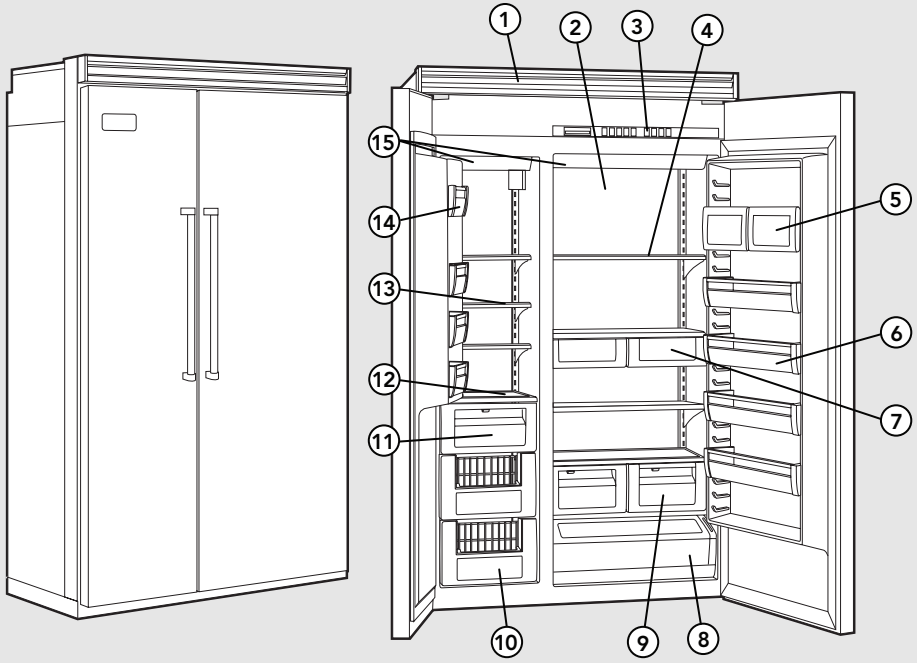

48" W. Model Shown

1. Variable Speed DC Overdrive™ Compressor and Super Clog-Resistant™ Condenser
2. Plasmacluster™ Ion Air Purifier
3. Electronic Controls with digital temperature readouts
4. Spillproof Shelves (4)
5. Dairy Compartments (2)
6. Adjustable Door Bins (4) (Patent Pending)
7. Deli Compartment(s)
   42" W.– Full-Width (1)
   48" W.– Half-Width (2)
8. Adjustable Cold Zone™ Drawer
9. Adjustable Humidity Zone™ Drawer(s)
   42" W.– Full-Width (1 drawer)
   48" W.– Half-Width (2 drawers)
10. Glide-Out Freezer Baskets (2)
11. Ice Bucket (1)
12. Non-Adjusting Freezer Shelf (1)
13. Adjustable Freezer Shelves (3)
14. Adjustable Freezer Door Bins (3)
15. Lights

Features (built-in side-by-side, dispenser)

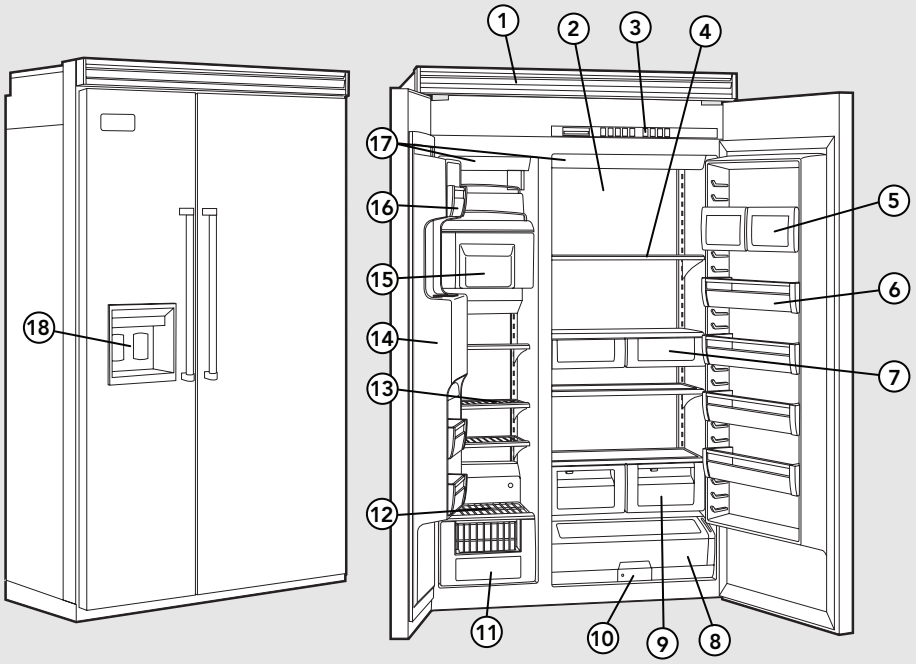

48" W. Model Shown

1. Variable Speed DC Overdrive™ Compressor and Super Clog-Resistant™ Condenser
2. Plasmacluster™ Ion Air Purifier
3. Electronic Controls with digital temperature readouts
4. Spillproof Shelves (4)
5. Dairy Compartments (2)
6. Adjustable Door Bins (4) (Patent Pending)
7. Deli Compartment(s)
   - 42" W.– Full-Width (1)
   - 48" W.– Half-Width (2)
8. Adjustable Cold Zone™ Drawer
9. Adjustable Humidity Zone™ Drawer(s)
   - 42" W.– Full-Width (1 drawer)
   - 48" W.– Half-Width (2 drawers)
10. Water Filter (1)
11. Glide-Out Freezer Basket (1)
12. Non-Adjustable Freezer Shelf (1)
13. Adjustable Freezer Shelves (3)
14. Ice and Water Dispenser (1)
15. Ice and Storage Bucket (1)
16. Adjustable Freezer Door Bins (3)
17. Lights
18. Built-In Ice and Water w/Motorized Ice Dispenser (Patent Pending)

Features (built-in bottom-mount)

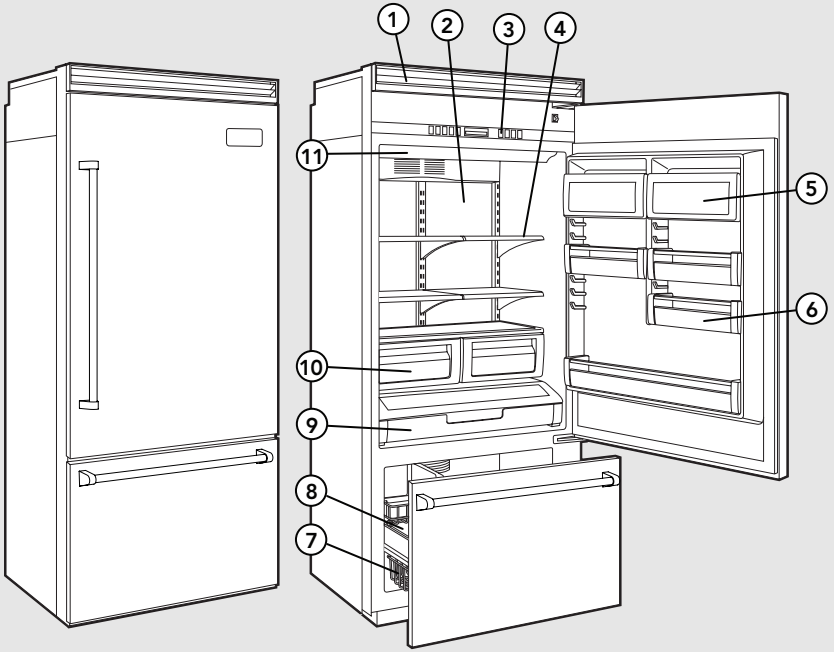

36" W. Model Shown

1. Variable Speed DC Overdrive™ Compressor and Super Clog-Resistant™ Condenser
2. Plasmacluster™ Ion Air Purifier
3. Electronic Controls with digital temperature readouts
4. Spillproof Shelves (5)
   - Half-Width (4)
   - Full-Width (1)
5. Dairy Compartments (2)
6. Adjustable Door Bins (4) (Patent Pending)
   - Half-Width (3)
   - Full-Width (1)
7. Wire Freezer Baskets (2)
8. Ice Bucket (1)
9. Adjustable Cold Zone™ Drawer
10. Adjustable Humidity Zone™ Drawers (2)
11. Lights

Settings and Functions

In order for your new refrigerator to work properly, it is important that you understand its various features, controls, and how to use them.

Power On/Off Switch (Power Interruption Switch)

The power on/off switch is located behind your refrigerator's top grille. It is used to turn the power off when cleaning the refrigerator or changing the light bulbs. Your refrigerator arrives from the factory with the power interruption switch on.

To turn power off, remove the center grille blade. Press the power on/off switch to the off position.

To turn power on, press power on/off switch to the on position. Replace the center grille blade.

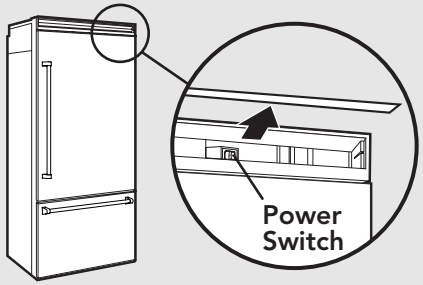

IMPORTANT: Be sure the power on/off switch is in the on position after cleaning or changing light bulbs.



Showroom Mode Initiation

Showroom mode allows electronic controls and interior lights to function independently of refrigeraton system.



To enter the showroom mode: Press and hold "ACTIVATE CONTROLS" pad; while holding, press and hold the "HIGHER" and "ALARM OFF" pads together for 3 seconds. Three beeps will sound and SHOW will be lit. Showroom mode is entered.

To exit the showroom mode: press and hold "ACTIVATE CONTROLS" pad; while holding, press and hold the "HIGHER" and "ALARM OFF" pads together. Three beeps will sound and control will revert to normal operation and display.

Electronic Temperature Settings



Your refrigerator's electronic controls are located behind the door above the cabinet interior. To activate the electronic control panel, press "ACTIVATE CONTROLS" pad. All other pads, except the "ALARM OFF" pad, will remain inactive until the "ACTIVATE CONTROLS" pad is pressed. Once activated, pad remains programmable for at least ten minutes.

When you first plug your new refrigerator in, you will find that the refrigerator is factory set at 38° F in the refrigerator and 0° F in the freezer. Wait 24 hours after plug-in for the cabinets to reach this setting. After 24 hours, you may adjust controls as desired.

To change from °F to °C, press and hold "ACTIVATE CONTROLS" then press and hold "ALARM OFF" for 3 seconds. To change back, follow the same steps.



To adjust the refrigerator or freezer temperature, simply press the "ACTIVATE CONTROLS" pad, then "REF TEMP" pad or "FRZ TEMP" pad. Press the "HIGHER" or "LOWER" pad to adjust temperature setting one degree at a time.

NOTE: *Allow 24 hours for temperature to reach desired setting after any change in set temperature.*

Entry Tone



The entry tone is the "beep" you will hear when you press the control pad. You can deactivate the entry tone by pressing and holding the "ACTIVATE CONTROLS" pad for three to five seconds. You will hear three short beeps to let you know that the entry tone feature has been deactivated.

To activate the entry tone, simply press and hold the "ACTIVATE CONTROLS" pad for three to five seconds.

Fast Cool



Fast Cool runs the compressor at high speed for 2 hours to cool the refrigerator as quickly as possible. After 2 hours, the refrigerator will return to the previous setting.

To activate fast cool, press "ACTIVATE CONTROLS" followed by the "FAST COOL" pad. The fast cool light will be lit.

Max Refrigerator Mode



Max refrigerator mode adjusts the refrigerator temperature to the coldest setting for four hours, at the end of which the refrigerator's temperature automatically returns to its previous setting.



To activate the max refrigerator mode, simply press the "ACTIVATE CONTROLS" pad, followed by the "MAX REF" pad. The "MAX REF" light will glow to let you know you've turned on the max refrigerator mode.

To deactivate the max refrigerator mode before the end of the four hour cycle, press the "ACTIVATE CONTROLS" pad, followed by the "MAX REF" pad.



Max Freezer Mode

Max freezer mode adjusts the freezer temperature to the coldest setting for 6 hours, at the end of which, the freezer temperature automatically returns to its previous setting.

To activate the max freezer mode, press the "ACTIVATE CONTROLS" pad, followed by the "MAX FRZ" pad. The "MAX FRZ" light will glow to let you know you have turned on the max freezer mode.

To deactivate the max freezer mode before the end of the 24 hours cycle, simply press the "ACTIVATE CONTROLS" pad, followed by the "MAX FRZ" pad.

Door Open Alarm

Door open alarm sounds and the "DOOR OPEN" light blinks if either door is left open for more than three minutes.



To deactivate the door open alarm, press the "ALARM OFF" pad or close the door that is open.

High Temperature Alarm

High temperature alarm sounds and the "HIGH TEMP" light glows if the refrigerator or the freezer temperature is too high for two hours. A blinking light signals which part of the appliance is affected. The alarm sound will end when the temperature is brought back to a proper setting.



To deactivate the high temperature alarm, press the "ALARM OFF" pad.

Power Loss Alarm

No alarm sounds, however, the "POWER" indicator flashes indicating a power loss. Press "ALARM OFF" to clear.

Settings and Functions

Product Controls

Temperature Sensor Alarm

Temperature sensor alarm is a special feature that electronically senses temperature sensor problems. The temperature sensor alarm will sound and the display will show either oPn or Shr. The alarm can be deactivated by pressing the "ALARM OFF" pad on your refrigerator's control panel. **If the display does not return to showing the temperature, contact an authorized Viking Range Corporation technician immediately.**

Display



To activate temperature display, press the "ACTIVATE CONTROLS" pad.



To deactivate temperature display, press the "ACTIVATE CONTROLS" pad, followed by the "DISPLAY OFF" pad.

Sabbath Mode

Sabbath mode is used to disable interior lights and alarms for observance of the Sabbath.

Before the Sabbath mode is engaged, the bale arm of the ice maker needs to be raised until it clicks into the detent. This turns off the power to the ice maker.



To enter Sabbath mode, press the "ACTIVATE CONTROLS" pad to activate the control panel. Then, press and hold "ACTIVATE CONTROLS" and "DISPLAY OFF" pads simultaneously for three seconds. It will beep three times and light the SAB indicator so you will know that you have activated Sabbath mode.



When your refrigerator is in Sabbath mode, interior lights, display (excluding SAB indicator, temperature, and compartment indicator), and alarms are disabled.

If your refrigerator loses power while in Sabbath mode, it will return to the Sabbath mode when power is reestablished.



To exit the Sabbath mode, press the "ACTIVATE CONTROLS" pad. Then, press and hold "ACTIVATE CONTROLS" and "DISPLAY OFF" pads simultaneously for three seconds. You will then hear three beeps letting you know that you have turned the Sabbath mode off.



Once your refrigerator has left the Sabbath mode, the bale arm of the ice maker needs to be pushed downward until it is no longer in the detent. This will restore power to the ice maker.

Spillproof Shelves

Your refrigerator's spillproof shelves are constructed of polypropylene molded around the glass and metal rail. This design means that the shelves are completely enclosed and liquids can't seep under the glass. This localizes spills and makes clean-up easier. Spillproof shelves also adjust to meet individual storage needs.

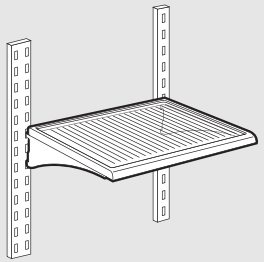

NOTE: *Foods and beverages placed on the uppermost shelf under the air vent may freeze.*

Shelf Adjustment

You can adjust the shelves to match the way you use your refrigerator. To remove the shelves, tilt the shelf up at the front releasing the hooks from the shelf support, then pull the shelf straight out.

To replace shelves, guide the rear hooks of the shelf into the slots in the shelf supports. Then, tilt the shelf up at the front until the hooks drop into the slots, and lower the front of shelf to level position.

⚠ CAUTION

To avoid personal injury and property damage, confirm shelf is secure before placing items on shelf.

⚠ CAUTION

To avoid personal injury or property damage, handle tempered glass shelves carefully. Shelves may break suddenly if nicked, scratched, or exposed to sudden temperature change.

Door Bin Adjustment

Your refrigerator's door bins hold two-liter bottles and can be placed in any position on the refrigerator door. To remove a bin, simply grasp it, lift the bin up, and pull it out.

To replace the bin, place it over the glides in the refrigerator door, and push the door bin down to lock it into place.

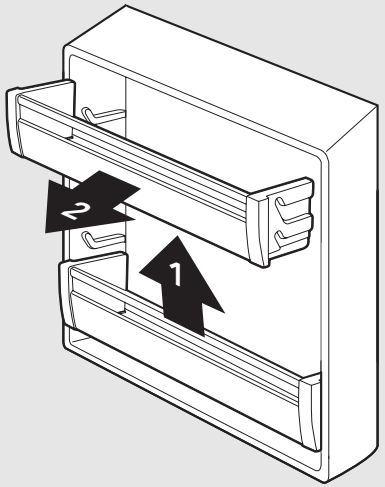

Dairy Compartments

Your refrigerator's dairy compartment doors are surrounded by gaskets for a tighter seal. This allows items to stay fresh much longer. The dairy compartments can be adjusted to meet your unique storage needs.

To remove the dairy compartments, simply grasp, lift up and pull out. To replace, position the dairy compartment over the glides in the refrigerator door, and push the compartment down to lock it into place.

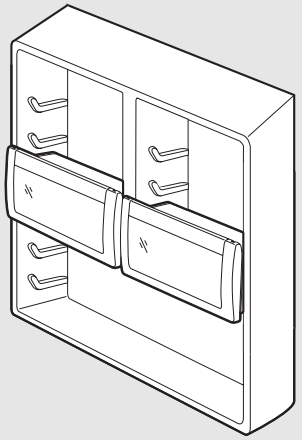

Adjustable Cold Zone™ Drawer

Your new refrigerator features an Adjustable Cold Zone™ Drawer. Freezer air is contained by gaskets in the air duct above the drawer. This area keeps food 3° to 5° F colder than average refrigerator temperatures.

The temperature control is located to the right of the drawer. The control adjusts the amount of freezer air circulating in this area. For normal refrigerator temperature, slide the control down. To cool down the drawer, slide the control up. The uppermost control position is quick chill. This can be used to quickly chill foods and beverages.

Adjustable Humidity Zone™ Drawer(s)

The moisture control on your refrigerator produce drawer(s) gives you the ability to change the amount of moisture or humidity in a drawer, and the clear top section allows you to see into a drawer without opening it.

The moisture control is located underneath the front trim. Slide the control to a higher setting for storing deli items or produce with leaves, such as lettuce, spinach, or cabbage. Slide the control to a lower setting for storing fruits and vegetables with skins, such as apples, corn, or tomatoes. See "Food Storage Guide" (pg. 30) for more information on storing foods properly.

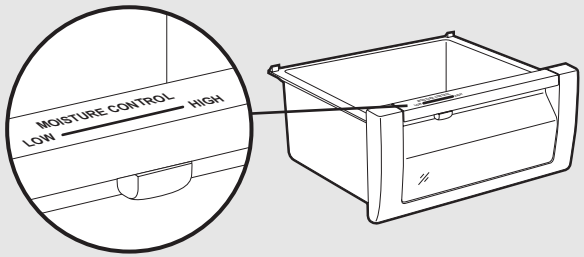

To remove drawer, roll the drawer out to the stop. Then, on each side of the drawer, locate the black leveler on the glides and lift up until the drawer disengages from the glides. Pull the drawer out the rest of the way. To replace the drawer, extend the glides out to the stop. Next, place the drawer onto the glides and push it back until the drawer engages the hook. Lower the front part of the drawer, grasp the glides/drawer and lightly squeeze until the drawer snaps onto the glides. Then slide the drawer back until it stops.

Refrigerator (all units)

Adjustable Cold Zone™ Drawer

Your refrigerator's drawer glides forward on an inner and outer track, and the lid raises for easy access. This special feature holds extra-large deli trays, wine bottles, etc. The lid can also be removed for tall items such as tiered cakes and flower arrangements. To open the drawer, simply grasp the molded handle and pull forward.

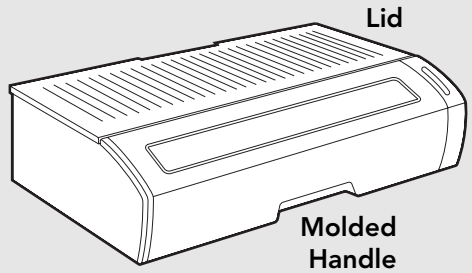

To remove drawer, roll drawer out to the stop. Remove lid by lifting to release hoods then pulling out. Remove the drawer by lifting slightly and pulling out.

To replace, position drawer rollers behind the track roller. Push drawer up and onto the track. Slide drawer back slightly. Replace cover by inserting hooks into drawer then placing back and front down. Slide drawer back until it stops.

Egg Bin

Your refrigerator's egg bin has three pieces: the lid, the egg tray, and the bin. The egg bin can hold up to two dozen eggs.

To hold one dozen eggs, place twelve eggs into the egg carrier. Then place the egg carrier into the bin and cover with the lid.

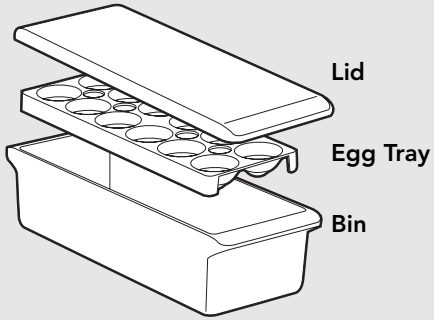

With two dozen eggs, place twenty-four eggs loose in the bin and cover them with the lid. Use the carrier to transport eggs between the bin and your cooking area.

When the egg tray is removed, the bin will accept items such as a standard egg carton, ice, etc.

Freezer (all units except bottom-mount)

Wire Shelf Adjustment

You can easily adjust your freezer's shelves. To remove a shelf, simply tilt it up at the front, releasing the hooks from the shelf support. Then, pull the shelf straight out. To replace, guide the rear hooks of the shelf into the slots in the shelf supports. Then, tilt the shelf up at the front until the hooks drop into the slots. Next, lower the front of the shelf to a level position.

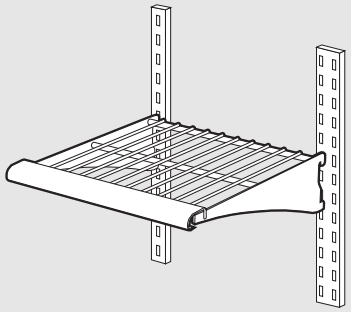

Wire Basket Adjustment

(all freezer model only)
You can easily adjust your freezer's wire baskets by moving the dividers. To remove a divider, simply grasp it in the center, and pull the divider straight up. To replace, guide the divider around the basket wires in the desired location, then push the divider down until it stops.

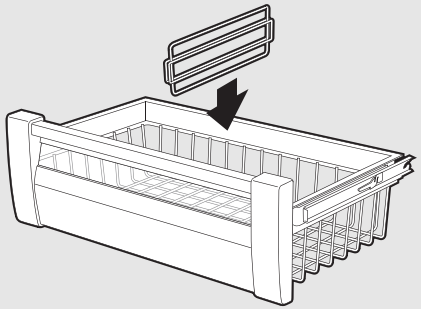

Freezer Basket Divider

(bottom-mount model only)
The freezer basket divider separates the freezer into sections for easy food organization.

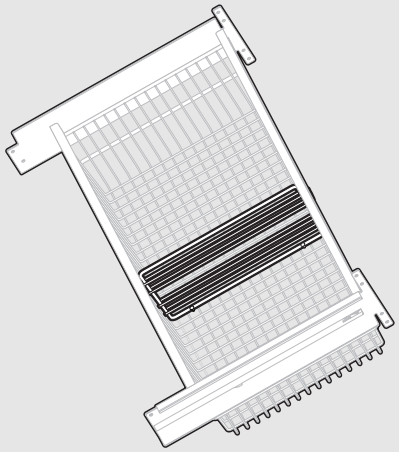

⚠ WARNING

If the freezer basket divider is removed, there is enough space for children to crawl inside. To prevent accidental child entrapment, DO NOT allow children to play inside drawer.

Automatic Ice Maker (all units except all refrigerator)

The ice maker and slide-out ice drawer on your refrigerator are not adjustable, but the ice drawer slides forward for easy access to ice.

After the refrigerator reaches normal temperature, the ice maker fills with water and begins operating. Under normal conditions, the ice maker will produce seven to nine batches of ice per 24 hour period.

NOTE: *Allow 24 to 48 hours after installation before looking for ice in your ice drawer. You should discard the first three full drawers of ice produced by your refrigerator, and should also throw out the first drawer full of ice your refrigerator produces after extended periods of non-use.*

During ice production, the ice maker arm raises and lowers. When the ice bin is full, the ice maker arm automatically turns the ice maker off. To manually stop ice production, raise the ice maker arm. You will hear a definite click when you have the arm in the right position. The ice maker won't produce any more ice until you lower the ice maker arm.

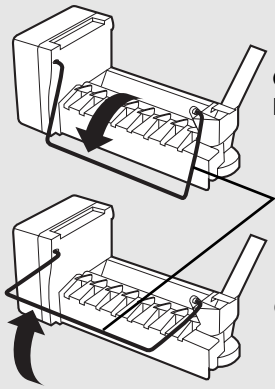

⚠ CAUTION

To avoid damage to ice maker, observe the following:
- Do not force ice maker arm down or up past stop position.
- Do not place or store anything in ice bucket.

Ice Bin Adjustment (all freezer model only)

Ice bins can be adjusted to match the way you use your freezer. The ice bin on the left-hand side is used for collecting ice from the ice maker. Once the left-hand ice bin is full, the bins can be reversed so additional ice is made. If the ice maker is not operating, the ice bin can be used for cold storage.

Automatic Ice Maker

To remove ice bins, extend ice drawer fully. Place hand underneath ice bin. Push ice bin upward. Grab ice bin edge and lift upward. Store ice bin in safe place.

To replace ice bins, lower ice bin in cutout on drawer frame. Adjust forward or backward as needed.

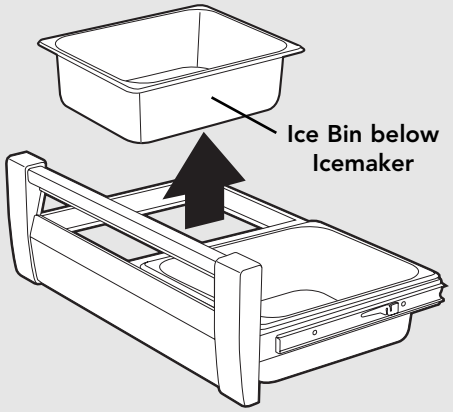

Water Dispenser Operation (dispenser models only)
Wait a couple of minutes after connecting your refrigerator to the household water supply before attempting to use the water dispenser.

NOTE: *Discard first ten to fourteen containers of water dispensed after initially connecting your refrigerator to the water supply. Do the same after your refrigerator has an extended period of non-use.*

You will be able to dispense water by pressing a sturdy, wide-mouth drinking glass or container against the water dispensing pad. To stop the flow of water, release the pressure. A small amount of water may continue to fall into the spill shelf located just below the dispenser. The spill shelf is not self draining, so large spills should be wiped dry.

⚠ CAUTION

To avoid personal injury or property damage, observe the following:
- Do not operate dispenser with freezer door open.
- Do not put fingers, hands, or any foreign object into dispenser opening.
- Do not use sharp objects to break ice

Automatic Dispenser

Ice Dispenser Operation (dispenser models only)
Your refrigerator's ice dispenser allows you to select either cubed or crushed ice by sliding the lever on the ice dispenser panel. A slight delay occurs when switching between cubed and crushed modes, and pieces of crushed ice will vary in size and shape.

Once you have made your selection, dispense ice by pressing a sturdy, wide mouth drinking glass or container against the ice dispenser pad. You should release pressure before the container is full because some ice will continue to fall.

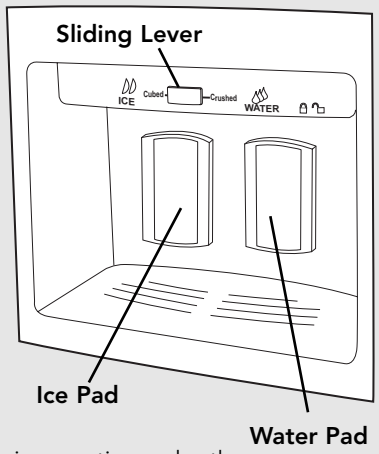

NOTE: *You can reduce the spray of crushed ice by holding the wide-mouth container directly under the ice chute and as high as possible in the dispenser area.*

If your refrigerator is dispensing ice continuously, the dispenser's motor is designed to shut off automatically after three to five minutes. The motor will then reset after three minutes and dispensing can continue.

When you repeatedly dispense crushed ice, "snow" may form on your the door and on the ice chute. You should allow "snow" to evaporate on its own, or you can wipe it dry.

NOTE: *The ice and water dispensers will shut off if the refrigerator or freezer door has been left ajar for ten minutes. Operation will resume when the door is closed.*

Removing Ice Bucket
You can remove the Ice Bucket by simply lifting the bucket and pulling it out. To replace it, slide it back in until the bucket locks in place. If the freezer door will not close, the bucket is not in the proper position.

⚠ CAUTION

To avoid property damage, do not dispense ice directly into a thin glass, fine china, or delicate crystal.

Automatic Dispenser

Child Lock Feature (dispenser models only)
When engaged, your refrigerator's child lock feature prevents water or ice from being dispensed. This feature is useful when cleaning the dispenser or to keep children from dispensing ice and water. To activate the child lock, push the child lock switch to the left (see illustration). To deactivate, push the child lock switch to the right. Your appliance is shipped from the factory with the child lock in the off position.

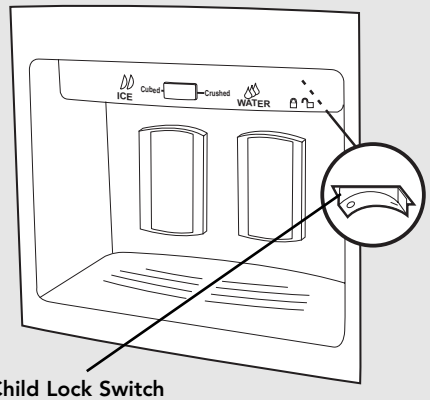

Child Lock Switch

Installing the Water Filter

Locate water filter door. The door is located under the Adjustable Cold Zone™ drawer handle. Push the upper left corner of the door to release the door latch. Pull the door downward. Insert the filter cartridge into circular opening in filter housing. Move the filter cartridge horizontally until the filter head is engaged. Rotate gently clockwise until the filter stops. Flush 3 gallons through filter before use (flush approximately 3 minutes). If water spurts occur, continue to run water until water runs steady. Additional flushing may be required in areas with poor quality water.

NOTE: *Allow a one to two minute delay to allow internal water tank to fill.*

⚠ CAUTION

- Be sure to have replacement cartridges available when filter change is required.
- If water filtration system has been allowed to freeze, replace filter cartridge.
- If system has not been used for several months, and water has unpleasant taste or odor, flush system by dispensing two-three glasses of water. If unpleasant taste or odor persists, change filter cartridge.

Replacing Water Filter

IMPORTANT: Air trapped in your refrigerator's water filtration system may cause water and the cartridge to eject. Use caution when removing the filter.

Locate water filter door. The door is located under the Adjustable Cold Zone™ drawer handle. Push the upper left corner of the door to release the door latch. Pull the door downward. Turn filter cartridge counterclockwise until it releases from filter head. Drain water from the filter into a sink and dispose of the cartridge. Wipe up excess water at filter location and insert the filter cartridge into circular opening in filter housing. Move the filter cartridge horizontally until the filter head is engaged. Rotate gently clockwise until the filter stops. Flush air from the system by running water through the dispenser continuously for three minutes. If water spurts occur, continue to run water until flow is steady. Additional flushing may be required in areas with poor water quality.

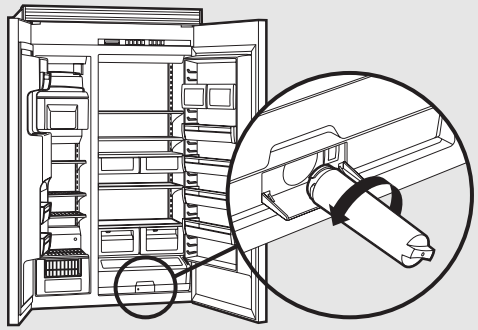

When to Change the Water Filter

Your water filter provides a cleaner ice and water supply by filtering bad tastes, odors, sediment and harmful contaminants. To ensure proper filtration, the water filter cartridge should be changed every nine months or after 750 gallons of water are used, whichever comes first.

IMPORTANT: The condition of water and amount used determines the life span of your water filter cartridge. If water use is high, or if water is of poor quality, you may have to replace the cartridge more frequently.

How to Order Replacement Filter Cartridges

Replacement filters are available through your local Viking Range dealer. You may also order filters by calling Viking Range Preferred Service at 1-888-845-4641, or online at www.vikingrange.com.

⚠ WARNING

To avoid serious illness or death, do not use unit where water is unsafe or of unknown quality without adequate disinfection before or after use of filter.

Storing Fresh Food

Wrap or store food in the refrigerator in airtight and moisture-proof material. This prevents food odor and taste transfer. For dated products, check use-by date to ensure freshness.

To store leafy vegetables, remove store wrapping. Then tear off bruised and discolored areas. Wash the vegetables in cold water and drain, and then place them in a plastic bag or plastic container and store in your produce drawer.

For vegetables with skins, such as carrots and peppers, store in plastic bags or containers.

When refrigerating or freezing fruit, wash the fruit and then let it dry. Store the fruit in plastic bags. Don't wash or hull berries until they are ready to use. Instead, sort and keep berries in their original container in the produce drawer, or store in a loosely closed paper bag on the refrigerator shelf.

Store eggs without washing them. Keep eggs in their original carton or in your refrigerator's egg bin.

Wipe milk cartons. For best storage, place milk on an interior shelf.

Keep opened butter in covered dish or closed compartment. When storing butter in the freezer, wrap it in freezer packaging.

When you have leftovers, cover then with plastic wrap, aluminum foil, or store the leftovers in plastic containers with tight lids.

Store meat in its original wrapping, as long as it's airtight and moisture-proof. Rewrap meat if necessary.

NOTE: *When storing meat longer than the recommended times, freeze the meat.*

The Adjustable ColdZone™ Drawer is ideal for longer term meat storage because the temperature can be set 3˚ to 5˚ colder.

Recommended storage times:

Chicken	1-2 days	Bacon	5-7 days
Ground Beef	1-2 days	Cold Cuts	3-5 days
Steaks/Roasts	3-5 days	Variety Meats	1-2 days
Cured Meats	7-10 days		

NOTE: *Use fresh fish and shellfish the same day as purchased.*

Food Storage Guide

Packaging Food for Freezing

The secret of successful freezing is in the packaging; the way you close and seal a package of food must not allow air or moisture in or out, or the quality of the food will deteriorate while frozen.

Packaging you should not use for freezing includes:

- Bread wrappers
- Non-polyethylene plastic containers
- Containers without lids
- Wax paper or wax-coated freezer wrap
- Thin, semi-permeable wrap

Recommended packaging:

- Rigid plastic containers with tight-fitting lids
- Straight-sided canning/freezing jars
- Heavy-duty aluminum foil
- Plastic-coated paper
- Non-permeable plastic wraps (made from saran film)
- Zip-top freezer bags

Follow package or container instructions for proper freezing methods.

Freezing Foods

Do not expect your freezer to quick-freeze large quantities of food; do not load more than two to three pounds of unfrozen food per cubic foot within 24 hours. Leave enough space for air to circulate around packages, and be careful to leave enough room at the front so the freezer door can close tightly.

A full freezer stays cold longer than a partially filled one, and a freezer full of meat stays cold longer than a freezer full of baked goods. If food contains ice crystals, it may be safely refrozen, although the quality and flavor may be affected. If the condition of the food is poor, or if you feel it is unsafe, dispose of it.

Storage times will vary according to the quality of food, the type of packaging or wrap used (airtight and moisture-proof), and the storage temperature, which should be 0° to 2° F (-18° to -17° C).

Operation

⚠ CAUTION

To avoid personal injury or property damage, read and follow all cleaning product manufacturer's directions.

⚠ WARNING

To avoid electrical shock which can cause severe personal injury or death, turn power disconnect switch to OFF before cleaning. After cleaning, return power disconnect switch to ON position.

Your refrigerator is built to give you many years of dependable service. However, there are a few things you can do to help extend its life. This section tells you how to clean your refrigerator and what to do when going on vacation, moving, or during a power outage.

Interior Surfaces

Wash the interior surfaces of your refrigerator with four tablespoons of baking soda dissolved in one quart of warm water. Use a soft, clean cloth. Rinse these surfaces with warm water, and dry with a soft clean cloth.

Do not use the following to clean interior surfaces:

- Abrasive or harsh cleaners, such as ammonia or chlorine bleach
- Concentrated detergents or solvents
- Metal scouring pads

These products can scratch, crack and discolor your refrigerator's surfaces.

Also, never wash the ice bucket or shelves in the dishwasher. They must be cleaned by hand.

Cleaning and Maintenance

Cleaning Chart

Part	What to Use	How to Clean
Removable parts (shelves, drawers)	Sponge or cloth with mild detergent and warm water	Hand wash, rinse, and dry thoroughly.
Front door panels • Stainless steel	Stainless steel cleaner	Wipe with soft cloth.
• Painted	Sponge or cloth with mild detergent and warm water	Hand wash, rinse, and dry thoroughly.
Interior walls (allow freezer to warm up so cloth will not stick)	Sponge, soft cloth or paper towel with baking soda or or mild detergent and warm water	Hand wash, rinse, and dry thoroughly.
Door liners and gaskets	Sponge, soft cloth or paper towel with mild detergent and warm water **Do not use cleaning waxes, concentrated detergents, or cleaners containing chlorine bleach**	Wash, wipe and dry thoroughly.
Plastic parts (covers, panels)	Soft, clean sponge or soft clean cloth with mild detergent and warm water **Do not use paper towels, window sprays, or scouring pads. These can scratch and damage the finish.**	Wash, wipe and dry thoroughly.
Super Clog-Resistant™ Condenser*	Vacuum cleaner with extended narrow attachment	Vacuum coils when dusty or dirty.

*Under normal conditions, condenser is maintenance-free.

Glass Shelves

To clean your refrigerator's glass shelves, lift the shelf out by lifting the front and releasing the hooks from the metal track. Then pull the shelf out. Be sure to allow the glass shelves to adjust to room temperature before cleaning.

To clean crevices, dilute mild detergent with water. Brush this solution into crevices using a plastic bristle brush. Let set for five minutes. Spray warm water into crevices using faucet spray attachment. Dry glass shelf thoroughly and replace shelf by inserting hooks into metal track and lowering front.

Door Gaskets

Clean the door gaskets every three months using the same procedures used for interior surfaces. You should apply a light film of petroleum jelly to keep gaskets pliable.

⚠ CAUTION

To avoid personal injury or property damage, handle tempered glass shelves carefully. Shelves may break suddenly if nicked, scratched, or exposed to sudden temperature changes.

⚠ WARNING

ELECTRICAL SHOCK HAZARD

Disconnect power or turn power disconnect switch to OFF position before removing top grille. Failure to do so can result in death or electrical shock.



⚠ WARNING

BURN HAZARD

Do not touch condenser coils near defrost pan.
Doing so can result in burns.



Defrost Pan

To prevent condensation from overflowing, check defrost pan periodically.

To check defrost pan, remove two screws securing kickplate to unit. Pull defrost pan forward until it stops. Remove any excess water from pan. Wipe and clean defrost pan with a sponge. Return defrost pan to original position. Return kickplate to unit by securing with two screws.

Door Stop Adjustment

Your refrigerator is factory set at the 110° door stop position. To change to either the 90° or 120° position, remove the door stop pin using a 3/16" allen wrench.

Side-by-Side

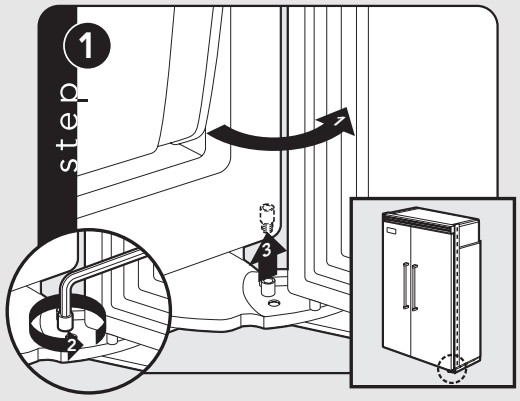

Open refrigerator door so door stop and shoulder screw are accessible.

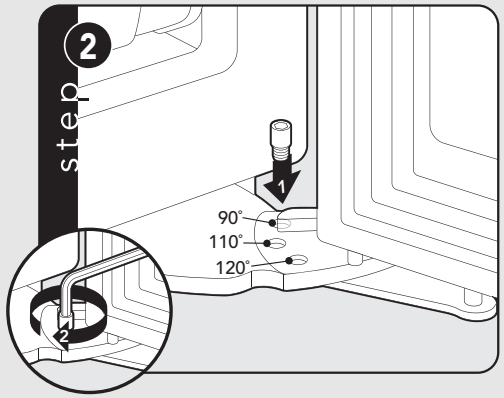

Remove shoulder screw and place in 90° or 120° position.

Bottom-Mount

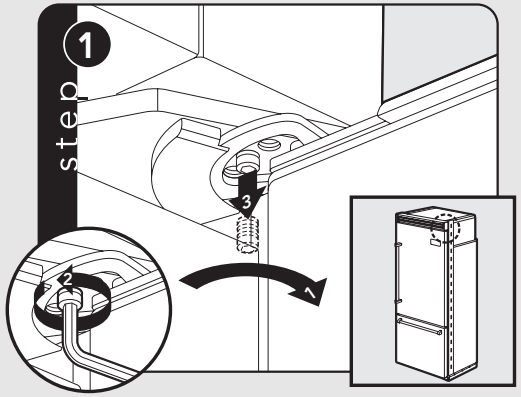

Open refrigerator door so door stop and shoulder screw are accessible.

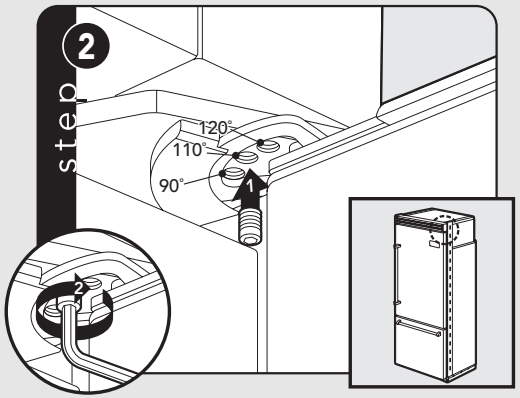

Remove shoulder screw and place in 90˚ or 120˚ position.

All Refrigerator/All Freezer

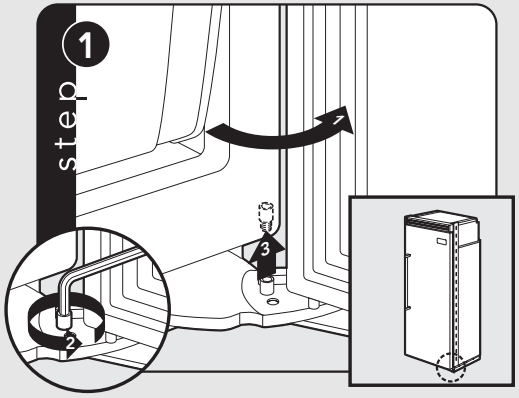

Open refrigerator door so door stop and shoulder screw are accessible.

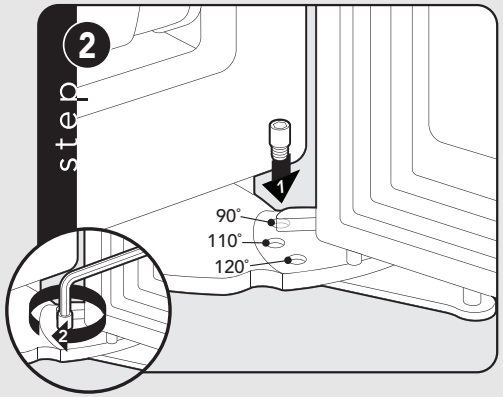

Remove shoulder screw and place in 90˚ or 120˚ position.

Upper Light Bulb

Disconnect power at breaker or turn power disconnect switch to the off position. Lightly grasp light cover with both hands and pull down. Replace bulb with an incandescent, medium base tubular bulb with a maximum of 40 watts. Replace cover by engaging light bracket with the back fingers on the light cover. Once engaged, snap the front fingers on the light cover. (*Note: The clear section of the light cover is considered the back section.)* Reconnect power or turn power disconnect switch to the on position.

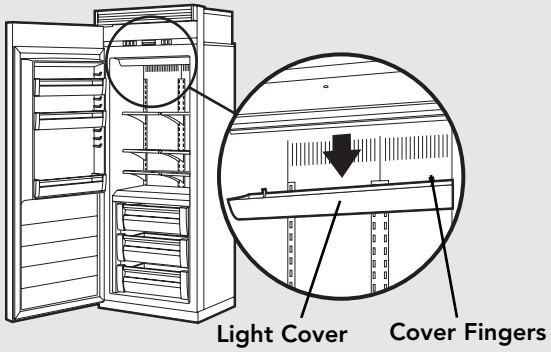

Dispenser Light Bulb

Disconnect power at breaker or turn power disconnect switch to the off position. Replace with an incandescent bulb with a maximum of 6 watts.

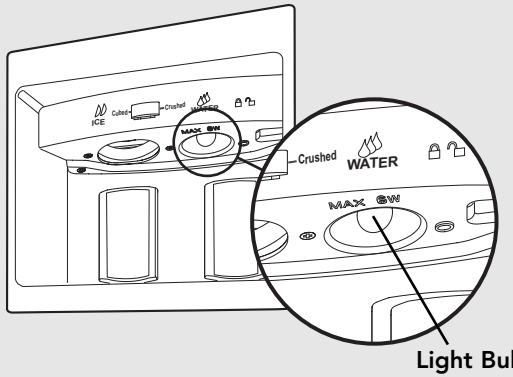

Lower Light Bulbs (all freezer only)

Disconnect power at breaker or turn power disconnect switch to off. Remove center freezer basket and frame by lifting up on the black leveler on each side until drawer disengages from glide. Lightly grasp light cover on the underneath side and pull up. Replace with an incandescent, medium base tubular bulb with a maximum of 40 watts. Replace cover by engaging the top of the light cover over the light bracket. Once engaged, snap the bottom of the light cover over the light bracket with light pressure. Replace center freezer basket and frame by aligning the inner glide on the basket with the outer glide in the unit. Slide freezer basket and frame back until black leveler "clicks." Reconnect power or turn power disconnect switch to the on position.

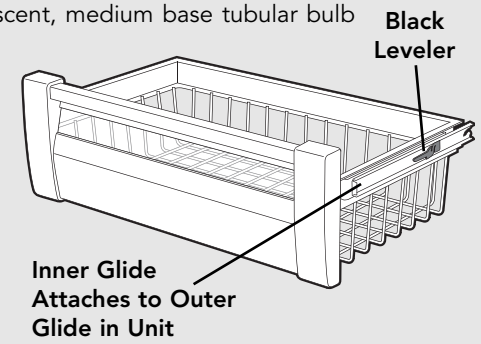

Lower Light Bulbs (refrigerator and freezer)

Disconnect power at breaker or turn power disconnect switch to the off position. Lightly grasp light cover on the underneath side and pull up. Replace with an incandescent, medium base tubular bulb with a maximum of 40 watts. Replace cover by engaging the top of the light cover over the light bracket. Once engaged, snap the bottom of the light cover over the light bracket with light pressure. Reconnect power or turn power disconnect switch to the on position.

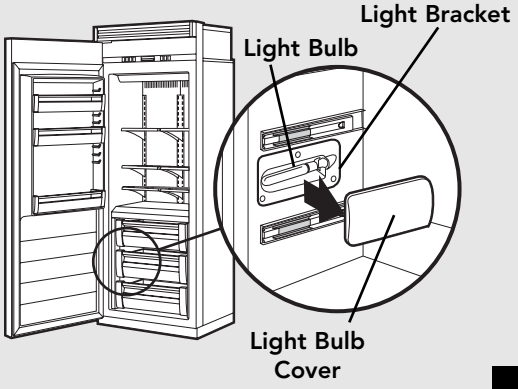

Cleaning and Maintenance

Saving Energy

You can help your refrigerator use less electricity with these simple tips:

- Open the door as few times as possible. Think about what you need before you open the door. Get everything out at one time. Keep food organized so you will not have to search for what you want. Close door as soon as food is removed.
- Do not overcrowd the unit so air movement is blocked.
- Do not set the unit to temperature colder than necessary.

Vacation Tip

When you will be gone from home a short time (less than four weeks), there is no need to shut off your refrigerator. However, be sure to:

- Use any perishables.
- Freeze other items.
- Raise the signal arm in the automatic ice maker to the off (up) position and shut off water supply to the ice maker.

If you will be away from home for a month or more, follow these guidelines:

- Remove all food.
- Turn the power disconnect switch to the off position.
- Clean the unit and door gaskets according to the "Cleaning and Maintenance" section on page 33.
- Prop doors open with rubber or wood blocks so air can circulate inside. This will keep odor and mold from building up.
- Raise the signal arm in the automatic ice maker to the off (up) position and shut off water supply to the ice maker.

Power Interruptions

If electric service to your refrigerator will be interrupted for 24 hours or less, keep the doors to the freezer closed. This helps food stay frozen.

If service will be interrupted longer than 24 hours, remove all frozen food and store it in a frozen food locker, or place two pounds of dry ice inside the freezer for every cubic foot of interior volume. This will keep food frozen for two to four days. Be sure to wear gloves to protect your hands from dry ice burns. If neither a food locker or dry ice is available, you should use or can your perishable food at once.

Troubleshooting

Understanding Sounds You May Hear

Your new refrigerator may make different sounds than your old one. Hard surfaces, such as the ceilings, walls, and cabinets around the unit can make these sounds seem louder. However, these sounds are normal and will soon become familiar; they indicate that your refrigerator is working properly.

Here are some of the noises you may hear and what they are:

- Freezer or refrigerator fresh food fan: sounds like air rushing or whirling
- Sealed system (evaporator and heat exchanger) refrigerant flow: sounds like gurgles, pops or boiling water
- Defrost heater: sizzles, hisses or pops
- Condenser fan: air rushes and whirls
- Compressor: has a high pitched hum or pulsating sound
- Ice maker valve hookup: buzzes when ice maker fills with water. This occurs whether or not the unit is connected to water supply. If the unit is not connected to water supply, stop sound by raising ice maker arm to off position.

Troubleshooting

Most performance problems you might encounter with your Viking referigerator will be minor and you should be able to fix them yourself without tools.

Listed in these charts are the most common problems consumers run into with their appliances. Please read through this and see if it can solve your problem before calling for service.

Common Refrigerator Problems

PROBLEM	POSSIBLE CAUSE AND/OR REMEDY
Unit will not operate	Is the power cord plugged into a live circuit with the proper voltage? Has a household fuse blown or circuit breaker tripped? Is the power switch in the on position?
Unit makes unfamiliar sounds	See "Understanding the sounds you may hear" for descriptions of normal sounds and what makes them.
Water in the defrost pan	This is normal in hot, muggy weather. Make sure the pan is level so it does not overflow.
Ice maker will not operate	Is the freezer cold enough to make ice? It could take overnight for the freezer to reach the proper temperature. Is the signal arm in the on (down) position? Is the water valve turned on? Is water getting to the water valve? Check water line for leaks.
Lights do not work	Has a household fuse blown or circuit breaker tripped? Is a bulb burned out?
Motor seems to run too long	The motor naturally runs longer on hot days, if the room is too warm, if a large amount of food has been added, or if the doors are opened often.
Temperature display does not match set point	Just plugged in unit, just put in hot food, opened the door for an extended time or frequently. Allow unit to stabilize for 24 hours.

Troubleshooting

Common Ice Maker Problems

PROBLEM	POSSIBLE CAUSE AND/OR REMEDY
Ice crescents attached at corners	This is normal. They break apart easily. Shake bin occasionally to keep cubes seperated.
Ice maker will not operate or ice is not made fast enough	• On/off lever is in the off (up) position. Lower lever to on (down) position. • Freezer is not cold enough. Adjust temperature controls and wait 24 hours.
Off-taste or odor in ice	• New plumbing connections can cause discolored or off-flavored ice. Discard the first three harvests of ice. • Cubes are stored too long. Throw them away and make a new supply. • Food is not wrapped properly • Freezer and ice bin need to be cleaned • Water may contain minerals. A filter may be needed to remove them.

Product Care

Service Information

If service is required, call your dealer or authorized service agency. The name of the authorized service agency can be obtained from the dealer or distributor in your area.

Have the following information readily available.

- Model number
- Serial number
- Date purchased
- Name of dealer from whom purchased

Clearly describe the problem that you are having. If you are unable to obtain the name of an authorized service agency, or if you continue to have service problems, contact Viking Range Corporation at 1-888-VIKING1 (845-4641), or write to:

VIKING RANGE CORPORATION
PREFERRED SERVICE
1803 Hwy 82W
Greenwood, Mississippi 38930 USA

Record the information indicated below. You will need it if service is ever required. The serial number and model numbers for your refrigerator are located on the upper wall, behind the lighting:

Model No._____

Serial No._____

Date of Purchase_____

Date Installed_____

Dealer's Name_____

Address_____

If service requires installation of parts, use only authorized parts to insure protection under the warranty.

Keep this manual for future reference.

Warranty

BUILT-IN BOTTOM-MOUNTS/SIDE-BY-SIDES/ALL REFRIGERATORS AND ALL FREEZERS WARRANTY
THREE YEAR FULL WARRANTY

Built-in bottom-mounts/side-by-sides/all refrigerator and all freezers and all of their component parts, **except as detailed below*†**, are warranted to be free from defective materials or workmanship in normal residential use for a period of three (3) years from the date of original retail purchase or closing date for new construction, whichever period is longer. Viking Range Corporation, warrantor, agrees to repair or replace, at its option, any part which fails or is found to be defective during the warranty period.

***FULL NINETY (90) DAY COSMETIC WARRANTY:** Product is warranted to be free from cosmetic defects in materials or workmanship (such as scratches on stainless steel, paint/porcelain blemishes, etc.) for a period of ninety (90) days from the date of original retail purchase or closing date for new construction, whichever period is longer. Any defects must be reported to the selling dealer within ninety (90) days from date of original retail purchase. Viking Range Corporation uses high quality processes and materials available to produce all color finishes. However, slight color variation may be noticed because of the inherent differences in painted parts and porcelain parts as well as differences in kitchen lighting, product locations, and other factors. Therefore, this warranty does not apply to color variation attributable to such factors.

†FULL NINETY (90) DAY WARRANTY IN "RESIDENTIAL PLUS" APPLICATIONS: This full warranty applies to applications where use of the product extends beyond normal residential use, but the warranty period for products used in such applications is ninety (90) days. Examples of applications covered by this warranty are bed and breakfasts, fire stations, private clubs, churches, yachts, etc. Under this "Residential Plus" warranty, the product, its components and accessories are warranted to be free from defective material or workmanship for a period of ninety (90) days from the date of original retail purchase. This warranty excludes use of the product in all commercial locations such as restaurants, food service locations and institutional food service locations.

SIX YEAR FULL WARRANTY ON SEALED REFRIGERATION PARTS AS LISTED

Any sealed refrigeration system component, as listed below, is warranted to be free from defective materials or workmanship in normal household use during the fourth through the sixth year from the date of original retail purchase. Viking Range Corporation, warrantor, agrees to repair or replace, at its option, any part which fails or is found to be defective during the warranty period.

Sealed Refrigeration System Components: Compressor, Evaporator, Condenser, Connecting Tubing, Dryer/Strainer

TWELVE YEAR LIMITED WARRANTY ON SEALED REFRIGERATION PARTS AS LISTED

Any sealed refrigeration system component, as listed above, which fails due to defective materials or workmanship in normal household use during the seventh through the twelfth year from the date of original retail purchase will be repaired or replaced, free of charge for the part itself, with the owner paying all other costs, including labor.

TERMS AND CONDITIONS

This warranty extends to the original purchaser of the product warranted hereunder and to each transferee owner of the product during the term of the warranty and applies to products purchased and located in the United States and Canada. Products must be purchased in the country where service is requested. If the product or one of its component parts contains a defect or malfunction during the full warranty period after a reasonable number of attempts by the warrantor to remedy the defect or malfunction, the owner is entitled to either a refund or replacement of the product or its component part or parts. Replacement of a component part includes its free installation, except as specified under the limited warranty. Under the terms of this warranty, service must be performed by a factory authorized Viking Range Corporation service agent or representative. Service will be provided during normal business hours, and labor performed at overtime or premium rates shall not be covered by this warranty.

Owner shall be responsible for proper installation, providing reasonable and necessary maintenance, providing proof of purchase upon request, and making the appliance reasonably accessible for service. The return of the Owner Registration Card is not a condition of warranty coverage. You should, however, return the Owner Registration Card so that Viking Range Corporation can contact you should any question of safety arise which could affect you.

This warranty gives you specific legal rights, and you may also have other rights which may vary from jurisdiction to jurisdiction.

WHAT IS NOT COVERED BY THIS WARRANTY: This warranty shall not apply to damage resulting from abuse, failure to provide reasonable and necessary maintenance, accident, delivery, negligence, natural disaster, loss of electrical power to the product for any reason, alteration, outdoor use, improper installation, improper operation, or repair or service of the product by anyone other than an authorized Viking Range Corporation service agency or representative. This warranty does not apply to commercial usage.

Warranty (cont.)

LIMITATION OF REMEDIES AND DURATION OF IMPLIED WARRANTY

OWNER'S SOLE AND EXCLUSIVE REMEDY FOR A CLAIM OF ANY KIND WITH RESPECT TO THIS PRODUCT SHALL BE THE REMEDIES SET FORTH ABOVE.VIKING IS NOT RESPONSIBLE FOR CONSEQUENTIAL OR INCIDENTAL DAMAGE, INCLUDING BUT NOT LIMITED TO FOOD OR MEDICINE LOSS, DUE TO PRODUCT FAILURE, WHETHER ARISING OUT OF BREACH OF WARRANTY, BREACH OF CONTRACT OR OTHERWISE. Some jurisdictions do not allow the exclusion or limitation of incidental or consequential damages, so the above limitation or exclusions may not apply to you. **ANY IMPLIED WARRANTIES OF MERCHANTABILITY OR FITNESS FOR A PARTICULAR PURPOSE APPLICABLE TO THIS PRODUCT ARE LIMITED IN DURATION TO THE PERIOD OF COVERAGE OF THE APPLICABLE EXPRESS WRITTEN LIMITED WARRANTIES SET FORTH ABOVE.** Some states do not allow limitations on how long an implied warranty lasts, so the above limitation may not apply to you.

WARRANTY SERVICE

To obtain warranty service, contact an authorized Viking Range Corporation service agent, or Viking Range Corporation, 111 Front Street, Greenwood, Mississippi 38930, (888) 845-4641. Provide model and serial number and date of original purchase or closing date for a new construction. For the name of your nearest authorized Viking Range Corporation service agency, call Viking Range Corporation.
IMPORTANT: Retain proof of original purchase to establish warranty period.

Specifications subject to change without notice.