amazonbasics

USER'S MANUAL
Refrigerator
AB2019INRF001 (SBS 690 L)

Important Note:

Read this manual carefully before installing or operating your new refrigerator.
Make sure to save this manual for future reference.

Table of Contents

Safety and warning information 05

Safety for children and otherswho are vulnerable people 05

General Safety 05

Replacing the illuminating lamps 06

Refrigerant 06

Risk of fire 06

Electrical Safety 06

Daily use 07

Caution! Care and cleaning 07

Installation Important! 08

Service 08

Installing Your New Appliance 09

Ventilation of appliance 09

Level of appliance 10

Discription Of The Appliance 11

Display Controls 12

Controlling the temperature 12

Caution! 12

Unlock 12

Mode 12

Table of Contents

Holiday 13

Super Freeze 13

Artificial Intelligence 13

Fridge 13

Freezer 13

Door Alarm 13

Using Your Appliance 14

Adjust the door 14

Using your refrigerator compartment 14

Glass shelves and Door racks 14

Using your freezer compartment 14

Drawers 14

Using your ice box 14

Helpful Hints and Tips 15

Energy saving tips 15

Hints for the storage of frozen food 15

Switching off your appliance 15

Cleaning and Care 16

Switching off your appliance 16

Caution 16

Table of Contents

Interior cleaning ____ 16

Never use a metal or sharp instrument. ____ 16

Cleaning and Care ____ **17**

Door seals cleaning ____ 17

Replacing the LED light ____ 17

Troubleshooting ____ **17**

Rating Label ____ **19**

AmazonBasics e-waste Program ____ **20**

Safety and Warning Information

For your safety and correct usage before installing and first using the appliance, read this user manual carefully, including its hints and warnings. To avoid unnecessary mistakes and accidents, it is important to make sure that all people using the appliance are thoroughly familiar with its operation and safety features. Save these instructions and be sure that they remain with the appliance if it is moved or sold, so that anyone using it throughout its life, will be properly informed on its usage and safety notices. For the safety of life and property, keep the precautions of these user's instructions as the manufacturer is not responsible for damages caused by omission.

Safety for children and otherswho are vulnerable people

- This appliance can be used by children aged from 8 years and above and persons with reduced physical, sensory or mental capabilities or lack of experience and knowledge if they have been given supervision or instruction concerning use of the appliance in a safe way and understand the hazards involved. Children shall not play with the appliance. Cleaning and user maintenance shall not be made by children without supervision.
- This appliance is not intended for use by persons (including children) with reduced physical, sensory or mental capabilities, or lack of experience and knowledge, unless they have been given supervision or instruction concerning use of the appliance by a person responsible for their safety
- Keep all packaging away from children as there is risk of suffocation.
- If you are discarding the appliance, pull the plug out of the socket, cut the connection cable (as close to the appliance as you can) and remove the door to prevent children playing from suffering an electric shock or from closing themselves inside it.
- If this appliance, featuring a magnetic door seals, is to replace an older appliance having a spring lock (latch) on the door or lid, be sure to make the spring lock unusable before you discard the old appliance. This will prevent it from becoming a death trap for a child.

General safety

WARNING

This appliance is intended to be used in household and similar applications such as

- Staff kitchen areas in shops, offices and other working environments;
- Farm houses and by clients in hotels, motels and other residential type environments;
- Bed and breakfast type environments;
- catering and similar non-retail applications.
- **Do not** store explosive substances such as aerosol cans with a flammable propellant in this appliance.
- If the supply cord is damaged, it must be replaced by the manufacturer, its service agent or similarly qualified persons in order to avoid a hazard.
- Keep ventilation openings, in the appliance enclosure or in the built-in structure, clear of obstruction.
- **Do not** use mechanical devices or other means to accelerate the defrosting process, other than those recommended by the manufacturer.
- **Do not** damage the refrigerant circuit.
- **Do not** use electrical appliances inside the food storage compartments of the appliance, unless they are of the type recommended by the manufacturer.
- The refrigerant and insulation blowing gas are flammable. When disposing of the appliance, do so only at an authorized waste disposal centre. Do not expose to flame.

Safety and Warning Information

- When positioning the appliance, ensure the supply cord is not trapped or damaged.
- Do not locate multiple portable socket-outlets or portable power supplies at the rear of the appliance.

Replacing the illuminating lamps

WARNING

The illuminating lamps must not be replaced by the user! If the illuminating lamps is damaged, contact the customer helpline for assistance. This warning is only for refrigerators that contain illuminating lamps.

Refrigerant

The refrigerant isobutene (R600a) is contained within the refrigerant circuit of the appliance, a natural gas with a high level of environmental compatibility, which is nevertheless flammable. During transportation and installation of the appliance, ensure that none of the components of the refrigerant circuit becomes damaged. The refrigerant (R600a) is flammable.

WARNING

- Refrigerators contain refrigerant andgases in the insulation. Refrigerant and gases must be disposed of professionally as they may cause eye injuries or ignition. Ensure that tubing of the refrigerant circuit is not damage prior to proper disposal.

Risk of fire

WARNING

If the refrigerant circuit should be damaged:

- Avoid opening flames and sources of ignition.
- Thoroughly ventilate the room in which the appliance is situated.
- It is dangerous to alter the specifications or modify this product in any way.
- Any damage to the cord may cause a shortcircuit, fire, and/or electric shock.

Electrical safety

1. The power cord must not be lengthened.
2. Make sure that the power plug is not crushed or damaged. A crushed or damaged power plug may overheat and cause a fire.
3. Make sure that you can access the main plug of the appliance.
4. **Do not** pull the main cable.
5. If the power plug socket is loose, do not insert the power plug. There is a risk of electric shock or fire.
6. You must not operate the appliance without the interior lighting lamp cover.
7. The fridge is only applied with power supply of single phase alternating current of 220~240V/50Hz. If fluctuation of voltage in the district of user is so large that the voltage exceeds the above scope, for safety sake, be sure to apply A.C. Automatic voltage regulator of more than 350W to the fridge. The fridge must employ a special power socket instead of common one with other electric appliances. Its plug must match the socket with ground wire.

Daily Use

- **Do not** store flammable gass or liquids in the appliance, There is a risk of an explosion.
- **Do not** operate any electrical appliances in the appliance (e.g.electric ice cream makers,mixers etc.).
- When unplugging always pull the plug from the mains socket,do not pull on the cable.
- **Do not** place hot items near the plastic components of this appliance.
- **Do not** place food products directly against the air outlet on the rear wall.
- Store pre-packed frozen food in accordance with the frozen food manufacture's instructions.
- The appliances manufactures storage recommendations should be strictly adhered to.Refer to relrelevant instructions for storage.
- **Do not** place carbonated or fizzy drinks in the freeze compartment as it creates pressure on the container,which may cause it to explode,resulting in damage to the appliance.
- Frozen food can cause frost burns if consumed straight from the freezer compartment.
- **Do not** place the appliance in direct sunlight.
- Keep buring candles,lamps and other items with naked flames away from the appliance so that do not set the appliance on fire.
- The appliance is intended for keeping food stuff and/or beverages in normal household as explained in this instruction booklet The appliance is heavy.Care should be taken when moving it.
- **Do not** remove nor touch items from the freezer compartment if your hands are damp/wet,as this could cause skin abrasions or frost/freezer burns.
- Never use the base,drawers, doors etc. to stand on or as supports.
- Frozen food must not be refrozen once it has been thawed out.
- **Do not** consume ice popsicles or ice cubes straight from the freezer as this can cause freezer burn to the mouth and lips.
- To avoid items falling and causing injury or damage to the appliance, do not overload the door racks or put too much food in the crisper drawers.

Caution! Care and Cleaning

- Before maintenance, switch off the appliance and disconnect the mains plug from the mains socket.
- **Do not** clean the appliance with metal objects, steam cleaner, ethereal oils, organic solvents or abrasive cleansers.
- **Do not** use sharp objects to remove frost from the appliance. Use a plastic scraper.

Installation Important!

- For electrical connection carefully, follow the instructions given in this manual. Unpack the appliance and check if there are damages on it.
- **Do not** connect the appliance if it is damaged. Report possible damages immediately to the place you bought it. In this case retain packing.
- It is advisable to wait at least four hours before connecting the appliance to allow the oil to flow back in the compressor.
- Adequate air circulation should be around the appliance, lacking this leads to overheating. To achieve sufficient ventilation, follow the instructions relevant to installation.
- Wherever possible the back of the product should not be too close to a wall to avoid touching or catching warm parts (compressor, condenser) to prevent the risk of a fire, follow the instructions relevant to installation.
- The appliance must not be locate close to radiators or cookers.
- Make sure that the mains plug is accessible after the installation of the appliance.

Service

- Any electrical work required to do the servicing of the appliance should be carried out by qualified electrician or competent person.
- This product must be serviced by an authorized Service Center, and only genuine spare parts must be used.

  1. If the appliance is Frost Free.

  2. If the appliance contains freezer compartment.

Installing your new Appliance

Before using the appliance for the first time, you should be informed of following tips.

Ventilation of appliance

In order to improve efficiency of the cooling system and save energy, it is necessary to maintain good ventilation around the appliance for the dissipation of heat. For this reason, sufficient clear space should be available around the refrigerator. Suggest: It is advisable for there to be 50-70mm of space from the back to the wall, at least 100mm from its top, atleast 100mm from its side to the wall and a clear space upfront to allow the doors to open 150°. See in following diagrams.

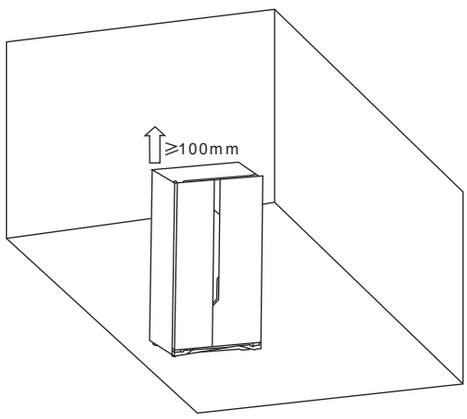

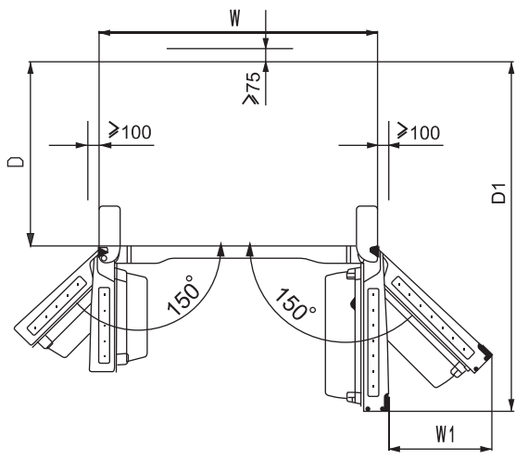

W	W1	D	D1
5.0 - 6.5 kg	8	40L/ 48 L	58 g

Note: This appliance performs well in the below climate class. It may not work properly if being left at a temperature above or below the indicated range for a long period.

Climate class	Ambient temperature
SN	+10^{0}C to +32^{0}C
S	+16^{0}C to +32^{0}C
ST	+16^{0}C to +38^{0}C
T	+16^{0}C to +43^{0}C

- Stand your appliance in a dry place to avoid high moisture.
- Keep the appliance out of direct sunlight, rain or frost. Stand the appliance away from heatsources such as stoves, fires or heaters.

Installing your new Appliance

Level of appliance

- For sufficient leveling and air circulating in the lower rear section of the appliance, the bottom feet may need to be adjusted. You can adjust them by your fingers or a suitable spanner.
- To allow the doors to self-close, tilt back the top backwards for about 10mm or 0.5° by turning the adjustable feet.
- Whenever you want to move the appliance, remember to turn the feet back up so that the appliance can roll freely. Reinstall the appliance when relocating.

Caution! The rollers, which are not castors, should be only used for forward or backward movement. Moving the refrigerator sideways may damage your floor and the rollers.

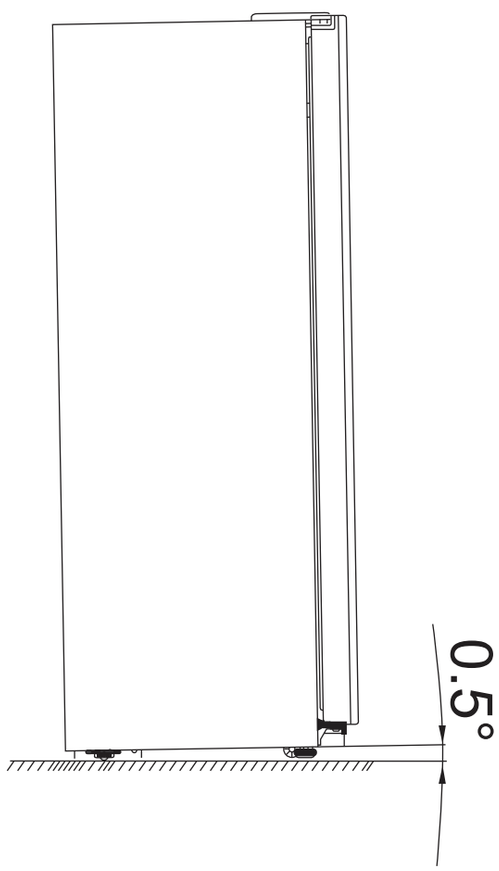

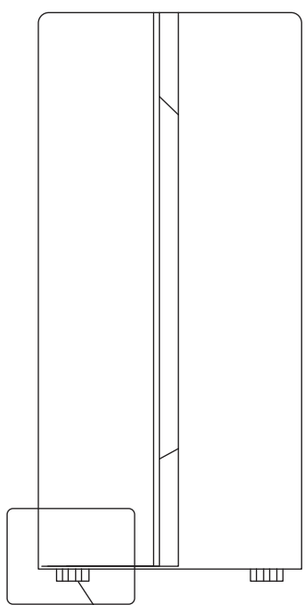

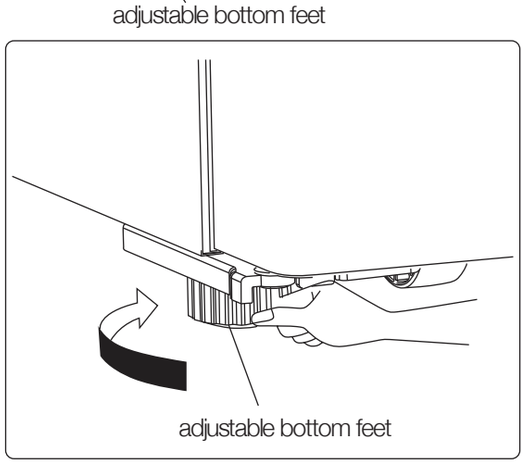

Description of the Appliance

View of the appliance

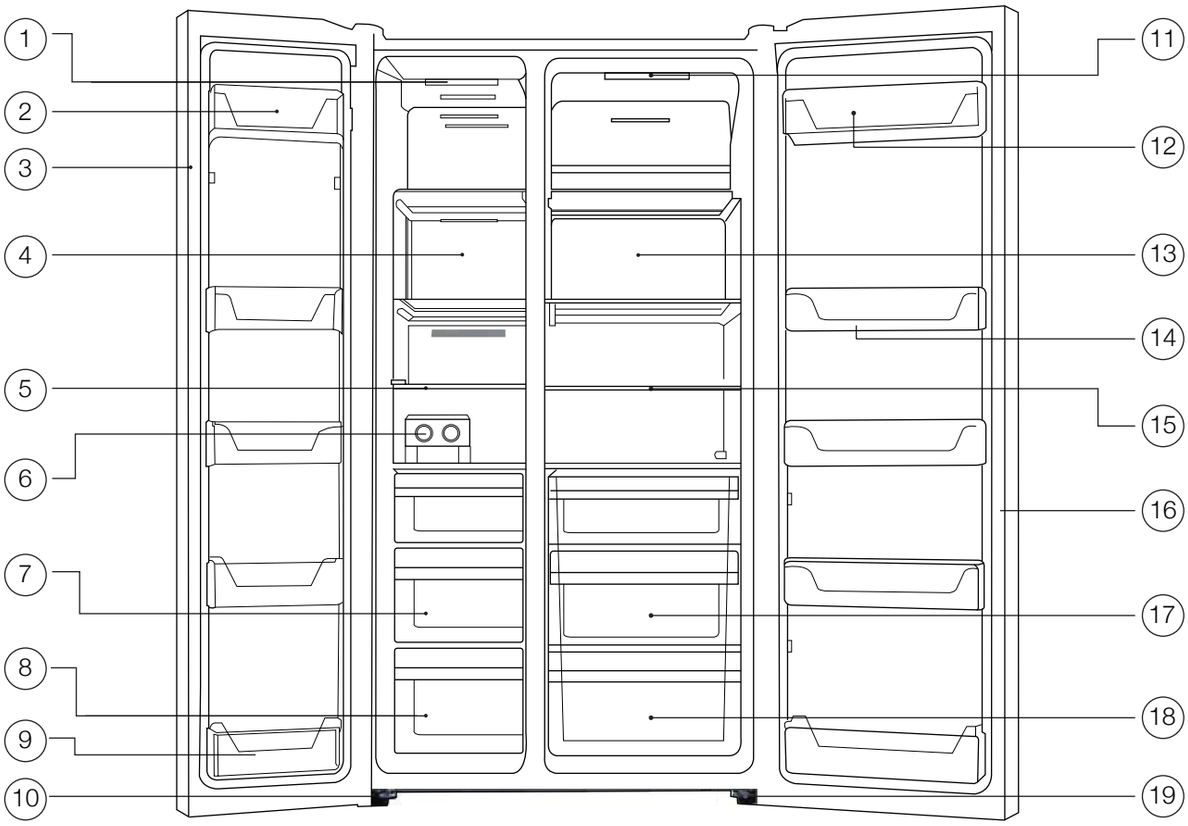

1. Freezer zone LED light
2. Freezer door Rack (four star zone)
3. Freezer door seal
4. Wind channel cover in freezer
5. Freezer shelf
6. Ice box part
7. Freezer upper drawer
8. Freezer lower drawer
9. Freezer door Rack (two star zone)
10. Left adjustable bottom feet
11. fresh zone LED light
12. Fresh door Rack
13. Wind channel cover in fresh
14. Egg tray
15. Fresh shelf
16. Fresh door seal
17. Fresh upper drawer
18. Fresh lower drawer
19. Right adjustable bottom feet

Note: Due to unceasing modification of our products, your refrigerator may be slightly different from this Instruction manual, but its functions and using methods remain the same.

Display Controls

Use your appliance according to the following control regulations, your appliance has the corresponding functions and modes as the control panels showed in the pictures below.

When the appliance is powered on for the first time, the backlighting of the icons on display panel starts working. If no buttons have been pressed and the doors are closed, the backlighting will turn off after 60 seconds. The cont rol panel consists of two areas about temperature,one area about different modes.

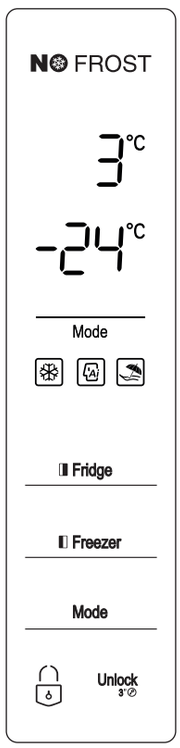

Controlling the temperature

We recommend that when you start your refrigerator for the first time, the temperature for the refrigerator is set to 5°C and the freezer to -18°C. If you want to change the temperature, follow the instructions below.

Caution!

When you set a temperature, you set an average temperature for the whole refrigerator cabinet. Temperatures inside each compartment may vary from the temperatures displayed on the panel, depending on how much food you store and where you place it. High or low room temperature may also affect the actual temperature inside the appliance.

Unlock

All the buttons are locked if the icon “ ” is illuminated, press the “ ” button for 3 seconds to unlock them. And it will be locked itself after Unlock 20 seconds no pressing any button.

Mode

You can select different modes by pressing the “Mode ” button when " " . When certain mode is selected, wait for the corresponding icon flashing for 10 seconds.

Display Controls

Holiday

If you are going to be away for a long period of time, holiday function will be your best choice.

- Press “Unlock” button to select the Holiday function. The light will be illuminated.
- When the holiday function is activated, the temperature of the fridge is automatically switched to 15°C and the freezer to -18°C to minimize the energy consumption.
- **Important!** **Do not** store any food in the fridge during this time.

Super Freeze

Super Freeze will quickly lower the temperature within the freezer so food will freeze faster. This can lock in the vitamins and nutrients of fresh food and keep food fresh longer

- Press “Unlock” button to select the Super Freeze function. The light will be illuminated.
- For the maximum amount of food to be frozen, please wait about 24 h.
- Super freeze automatically switches off after 26 hours and the freezer temperature setted to -25°C.

Artificial Intelligence

- When the function is seleced, the temperature of the appliance is automatically adjusted.
- When the Artificial Intelligence function is activated, the temperature of the fridge is automatically switched to 5°C and the freezer to -18°C.

Fridge

- You can press the "Fridge" button to activate the mode to control the fridge temperature.When you press the button continuously, the temperature will be set as the following sequence.

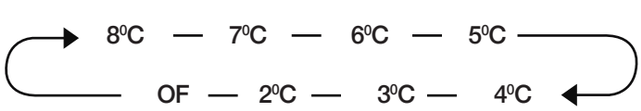

Freezer

- You can press the “Freezer" button to activate the mode to control the freezer temperature. When you press the button continuously, the temperature will be set as the following sequence.

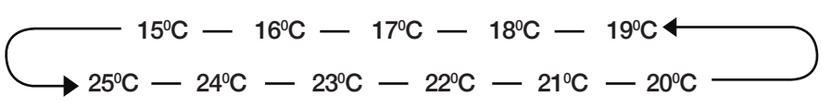

Door Alarm

- If the door of fridge or freezer is open for over 2 minutes, the door alarm will sound. The buzzer will automatically stop alarming 10 minutes later.
- To save energy, please avoid keeping the door open for a long time when using the appliance. The door alarm can be cleared by closing the door.

Using your Appliance

This section tells you how to use most of the useful features. We recommend that you read through them carefully before using the appliance.

Adjust the door

When you foud the doors are not at the same level, you can use the screwdriver to adjust the door. When the freezer door is upper than the refrigerator door. First, you can use the screwdriver to turn the bolt anticlockwise on the lower hinge that can make the door go up. Then use the screwdriver to locking the nut.

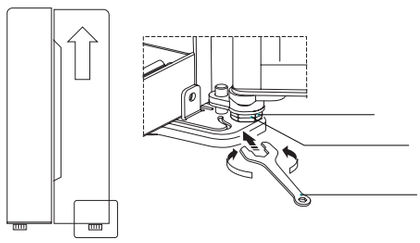

Using your refrigerator compartment

The refrigerator compartment is suitable for storage of vegetables and fruit. Food inside shall be packed to store in order to avoid losing moisture or flavor permeating into other foods. Caution! Never close the refrigerator door while the shelves, crisper and/or telescopic slides are extended. It may damage both them and the refrigerator.

Glass shelves and Door racks

The refrigerator compartment is provided with 3 glass shelves and several different door racks ,which are suitable for the storage of eggs, canned liquid, bottled drinks and packed food.. They can be placed at different heights according to your need. Before you lift up the door shelf vertically, please take the food out.

- When you remove the shelves, gently pull them forward until the shelf comes clear of the shelf guides.
- When you return the shelves, make sure there is no obstacle behind and gently push the shelf back into the position.

Note: All the door racks and covers are completely removable for cleaning.

Using your freezer compartment

The freezer compartment is suitable for storage of foods required to be frozen, such as meat, ice cream and others.

Caution! Ensure that bottles are not left in the freezer for longer than needed as freezing may cause the bottle to break.

Drawers

The drawers, mounted on telescopic extension slides, can be used to store rather more food.

- The method for removing the drawers is the same as the crisper in the refrigerator chamber.

Using your ice box

The ice box is as a independent part that can be take out of the freezing chamber.



water injection

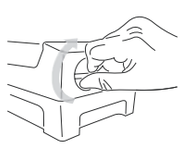

take off ice

- Take out the ice box placed on a platform, then pour water into the ice trays and the water level shall not exceed the maximum line.
- Place the filled ice box back to the freezing room.
- When ice cubes form, twist the knobs dockwise and the ice will drop into the ice box below.
- Ice cubes can be stored in the ice box, if you need t hem, you can pull out the ice box and take them out.

Note: Note: If the ice box is used for the first time orhas not been used for a long time, please clean it before using.

Helpful Hints and Tips

Energy saving tips

We recommend that you follow the tips below to save energy.

- Try to avoid keeping the door open for long period sin order to conserve energy.
- Ensure the appliance is away from any sources of heat (Direct sunlight, electric oven or cooker etc)
- Don't set the temperature colder than necessary.
- Don't store warm food or evaporating liquid in the appliance.
- Place the appliance in a well ventilated, humidity free room. Please refer to Installing your new appliance chapter.
- If the diagram shows the correct combination for the drawers, crisper and shelves, do not adjust thecombination as this is designed to be the most energy efficient configuration. **Hints for refrigeration**
- Don't place hot food directly into the refriger at or freezer, the internal temperature willi ncrease resulting in the compressor to work harder and will consume more energy.
- Do cover or wrap the food, particularly if it has a strong flavor.
- Place food properly so that air can circulate freely around it.
- Meat (All Types) Wrap in polythene food: wrap and place on the glass shelf above the vegetable drawer. Always follow food storage times and use by dates suggested by manufacturers.
- Cooked food, cold dishes, etc.: They should be covered and may be placed on any shelf.
- Fruit and vegetables: They should be stored in the special drawer provided.
- Butter and cheese:
- It is recommended to label and date each frozen package in order to keep track of the storage time.

Hints for the storage of frozen food

- Ensure that frozen food has been stored correctly by the food retailer.
- Once defrosted, food will deteriorate rapidly and should not be re-frozen. Do not exceed the storage period indicated by the food manufacturer.

Switchingoffyour appliance

If the appliance needs to be switched off for an extended period, the following step s should be taken prevent mould on the appliance.

1. Removeal lfood.
2. Remove the power
3. Clean and dry the interior thoroughly.
4. Ensure that all the doors are wedged open slightly to allow air to circulate.

Cleaning and Care

For hygienic reasons the appliance (including exterior and interior accessories) should be cleaned regularly at least every two months.

Caution! The appliance must not be connected to the mains during cleaning. Danger of electrical shock! Before cleaning switch the appliance off and remove the plug from the mains socket.

Switching off your appliance

To maintain good appearance of your appliance , you should clean it regularly.

- Wipe the digital panel and display panel with a clean, soft cloth.-
- Spray water onto the cleaning cloth instead of spraying directly on the surface of the appliance. This helps ensure an even distribution of moisture to the surface.
- Clean the doors, handles and cabinet surfaces with a mild detergent and then wiped dry with a soft cloth.

Caution!

- **Do not** use sharp objects as they are likely to scratch the surface.
- **Do not** use Thinner, Car detergent, Clorox, ethereal oil, abrasive cleansers or organic solvent such as Benzene for cleaning . They may damage the surface of the appliance and may cause fire.

Interior cleaning

You should clean the appliance interior regularly. It will be easier to clean when food stocks are low. Wipe the inside of the fridge freezer with a weak solution of bicarbonate of soda, and then rinse with warm water using a wrung-out sponge or cloth. Wipe completely dry before replacing the shelves and baskets. Thoroughly dry all surfaces and removable parts. Although this appliance automatically defrosts, a layer of frost may occur on the freezer compartment's interior walls if the freezer door is opened frequently or kept open too long. If the frost is too thick, choose a time when the supply of food stocks are low and proceed as follows :

1. Remove existing food and accessories baskets, unplug the appliance from the mains power and leave the doors open. Ventilate the room thoroughly to accelerate the thawing process.
2. When defrosting is completed, clean your freezer as described above.

As the appliance does not automatically defrost, frost will occur in certain areas in the freezer compartment after a period of use. This frost can be scraped away by using a plastic scraper.

Never use a metal or sharp instrument.

However, complete defrosting will become necessary approximately four times per year, or if the frost layer exceeds 4mm (1/4") affecting the system efficiency. Complete defrosting should be carried out if the frost cannot be scraped away, or if it begins to interfere with the food storage. Choose a time when the supply of food is low and proceed as follows:

1. Remove existing fo od a n d accessories, unplug the appliance from the mains power and leave the doors open. Ventilate the room thoroughly to accelerate the thawing process.
2. Scrape away as much frost as possible using the plastic scraper (scraper not included).
3. If necessary, place a cloth soaked with warm water on the frost layer's surface to accelerate the thawing process.
4. When defrosting is completed, clean your freezer as described - see interior cleaning .

Cleaning and Care

Door seals cleaning

Take care to keep door seals clean. Sticky food and drinks can cause seals to stick to the cabinet and tear when you open the door. Wash seal with a mild detergent and warm water. Rinse and dry it thoroughly after cleaning .

Caution! Only after the door seals are completely dry should the appliance be powered on.

Replacing the LED light

Warning: The LED light must not be replaced by the user! If the LED light is damaged, consult a qualified, registered electrician for assistance .

Troubleshooting

If you experience a problem with your appliance or are concerned that the appliance is not functioning correctly, you can carry out some easy checks before calling for service, please see below. You can carry out some easy checks according to this section before calling for service.

Warning! Do not try to repair the appliance yourself . If the problem persists after you have made the checks mentioned below, contact a qualified electrician, authorized service engineer or the shop where you purchased the product.

Problem	Possible cause and solution
Appliance is not working correctly	Check whether the power cord is plugged into the power outlet properly. Check the fuse or circuit of your power supply, replace if necessary. The ambient temperature is too low. Try setting the chamber temperature to a colder level to solve this problem. It is normal that the freezer is not operating during the automatic defrost cycle, or for a short time after the appliance is switched on to protect the compressor.
Odours from the compartments	The interior may need to be cleaned Some food, containers or wrapping cause odours.
Noise from the appliance	The sounds below are quite normal: • Compressor running noises. • Air movement noise from the small fan motor in the freezer compartment or other compartments. • Gurgling sound similar to water boiling. • Popping noise during automatic defrosting.

Troubleshooting

Problem	Possible cause and solution
Noise from the appliance	• Clicking noise before the compressor starts. Other unusual noises are due to the reasons below and may need you to check and take action: The cabinet is not level. The back of appliance touches the wall. Bottles or containers fallen or rolling.
The motor runs continuously	It is normal to frequently hear the sound of the motor, it will need to run more when in following circumstances : • Temperature setting is set colder than necessary • Large quantity of warm food has recently been stored within the appliance . • The temperature outside the appliance is too high. • Doors are kept open too long or too often. • After your installing the appliance or it has been switched off for a long time.
A layer of frost occurs in the compartment	Check that the air outlets are not blocked by food and ensure food is placed within the appliance to allow sufficient ventilation. Ensure that door is fully closed. To remove the frost, please refer to cleaning and care chapter.
Temperature inside is too warm	You may have left the doors open too long or too frequently; or the doors are kept open by some obstacle; or the appliance is located with insufficient clearance at the sides, back and top
Temperature inside is too cold	Increase the temperature by following the "Display controls" chapter.
Doors cant be closed easily	Check whether the top of the refrigerator is tilted back by 10-15mm to allow the doors to self close, or if something inside is preventing the doors from closing.
Water drips on the floor	The water pan (located at the rear bottom of the cabinet) may not be properly leveled, or the draining spout (located underneath the top of the compressor depot) may not be properly positioned to direct water into this pan, or the water spout is blocked. You may need to pull the refrigerator away from the wall to check the pan and spout.
The light is not working	• The LED light may be damaged. Refer to replace LED lights in cleaning and care chapter. • The control system has disabled the lights due to the door being kept open too long, close and reopens the door to reactivate the lights.

Rating Label

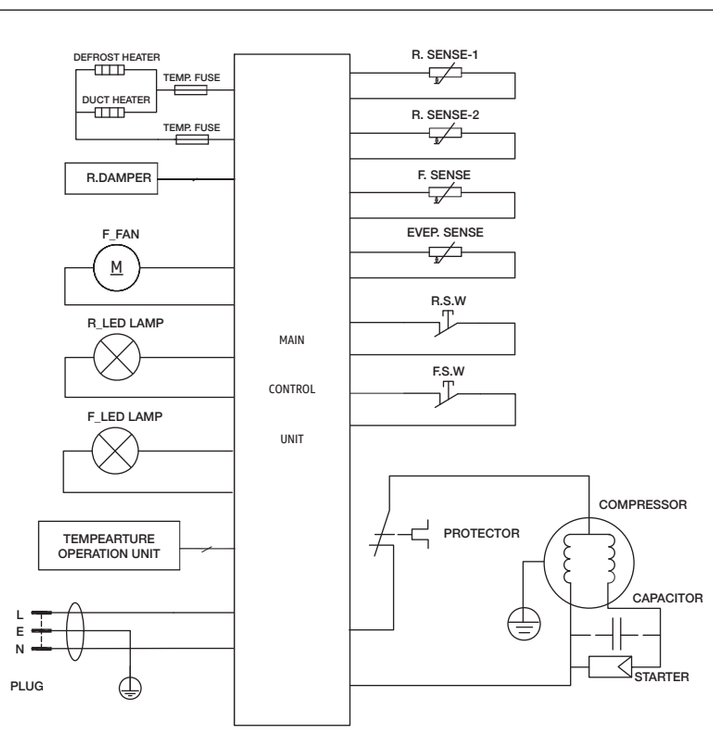

Made In China

amazonbasics

MODEL AB2019INRF001

CLIMATE CATEGORY	T
PROTECTIVE CLASSIFICATION OF ELECTRIC SHOCK RESISTANCE	I
RATED VOLTAGE	220V - 240V~
RATED FREQUENCY	50Hz
RATED CURRENT	1.6A
MAX WATTGE OF LAMP	2W+2W
FRESH FOOD VOLUME	415L
FROZEN VOLUME	233L
FREEZING CAPACITY	12kg/24h
ENERGY CONSUMPTION	770kWh/annum
DEFROST POWER	240W
REFRIGERANT	R600a (0.072kg)
INSULATION BLOWING GAS	CYCLOPENTANE
NOISE	43dB

4080739

AmazonBasics e-waste Program

Recycle your old AmazonBasics products and help protect the environment.

Consequences of Improper E-Waste Handling & Recycling:

E-waste when disposed or recycled improperly, can cause severe environmental pollution and adversely affect the human body as they contain excess of toxic chemicals like mercury, polybrominated flame retardants, barium, lithium and PVC. The common process of burning of e-waste in informal e-waste recycling and disposal facilities releases toxic gases into the atmosphere, causing severe air pollution. Besides that, poor recycling and improper disposal of e-waste leads to a lot of pollutants such as heavy metals like cadmium, lead and persistent organic pollutants to be released into the atmosphere, which further pollutes the eco-system and causes health hazards.

Alternately the practice of dumping of e-waste into landfills as followed by the informal e-waste recycling and disposal facilities eventually makes the hazardous and toxic components of e-waste seep into the eco-system including the regional water tables, causing soil pollution and contaminating the water table. Such contamination will affect nearby communities in an adverse manner for much longer time.

Accidental breakage and damage of electronics and e-waste can pose a threat to the environment. As long as the toxic components in electronics are enclosed within the original manufacturer's designed outer-shell of the gadget, they don't pose much of a danger as they have been engineered to contain any such effects. However, accidental breakage or damage of such electronics or e-waste can lead to toxic elements leaking and contaminating their immediate environment. Damage to the environment due to accidental breakage of e-waste is a major concern in informal e-waste disposal and recycling facilities, so consumers need to ensure that their e-waste is being disposed only through authorized recycling centres.

AmazonBasics Recycling Program:

Reteck Envirotech Private Limited ("Reteck"), a recycling company, has been authorized to provide e-waste disposal service to all customers of Cloudtail who have purchased AmazonBasics products. Reteck has a PAN-India collection mechanism for collecting e-waste from customers and for further disposal of such e-waste as per the E-Waste (Management & Handling) Rules, 2016 effective October 1, 2016.

Cloudtail through Reteck will provide e-waste drop off centres and ensure environmentally sound management of electronics that have reached their end of life phase. Reteck has all the necessary authorizations from the appropriate governmental agencies for their processing facilities. Reteck ensures proper recycling and disposal of e-waste, and does not incinerate, send e-waste to landfill or export hazardous e-waste to other countries. This helps us protect the environment from any hazardous consequences, which would be otherwise caused by the inappropriate waste management of e-waste.

To know more about Reteck collection centres and how to recycle your AmazonBasics product -

(i) Log on to https://www.reteck.co/recycling or

(ii) Call up Reteck's Toll Free Number: 1800-123-1714 or

(iil) Write to - info@reteck.in

AmazonBasics e-waste Program

Instructions of handling the product during and after its use and Do's and Don'ts with respect to handling the product:

Do's:

a) Always look for information in the product's user's guide for end-of-life equipment handling.
b) Ensure that only authorized recyclers handle your electronic products.
c) Always call local authorized e-waste collection centers to dispose products that have reached end-of life phase.
d) When your used electronic products, batteries or accessories reach the end of their life, always dispose them at your nearest authorized e-waste collection center.
e) Wherever possible or as instructed, separate the packaging material according to responsible waste disposal options and sorting for recycling.
f) Always ensure any glass surface is protected against breakage.
g) Kindly ensure that the product is properly packaged as per instructions before handing it over to the authorized Recycler.

Don'ts:

a) Do not dismantle your electronic products on your own.
b) Do not throw electronics having "Do not Dispose" symbol on the product package in your regular garbage bins along with municipal waste since it will ultimately reach a landfill.
c) Do not give e-waste to informal and unorganized sectors like local scrap dealers.

Be a Responsible User. Recycle your E-Waste for a Greener Planet.

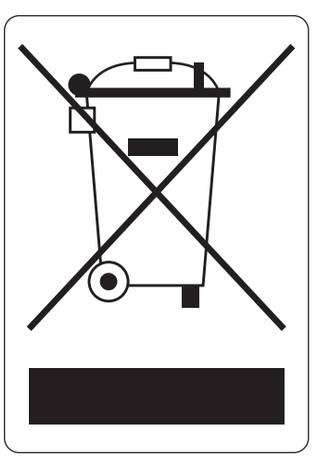

Information about hazardous constituents of the product, viz., concentration value of substances such as lead, mercury, hexavalent chromium, polybrominated biphenyls, polybrominated diphenyl ethers and cadmium.

amazonbasics

Any updates to the manual will be uploaded to the website,
www.amazon.in/basics, please check for the latest version.