ENGEL

MODEL

MRFD-015

SERVICE MANUAL

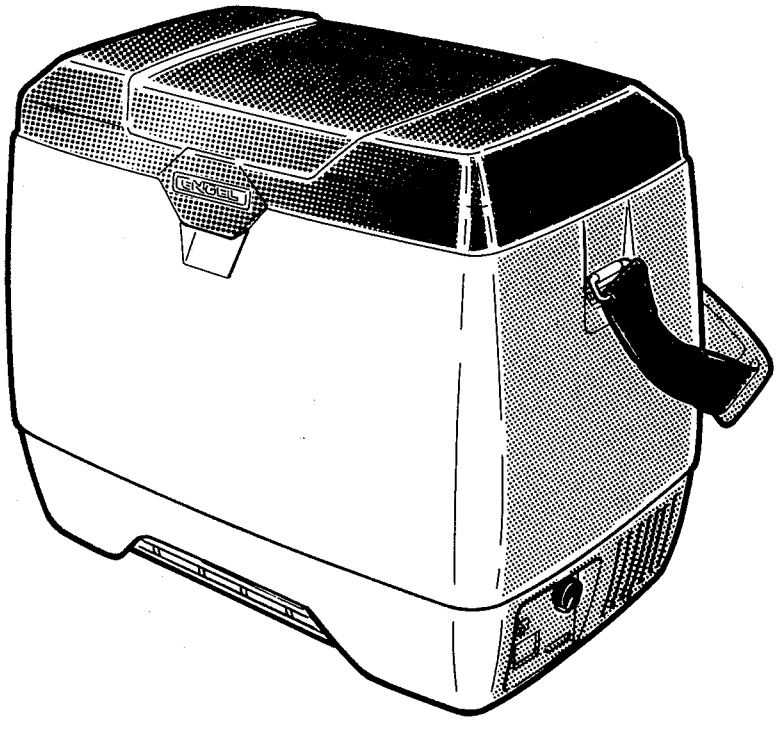

SAWAFUJI ELECTRIC CO., LTD.

TABLE OF CONTENTS

	Page
1. SPECIFICATION	1
2. WIRING DIAGRAM	2
3. TROUBLE SHOOTING	2
4. HOW TO CHECK EACH PARTS	3
5. SERVICING OF EACH COMPONENT	5
HOW TO REPLACE COOLING UNIT	5
HOW TO REPLACE OSCILLATOR	7

1. SPECIFICATION

MODEL	MRFD-015-AE (with thermostat dial type)
	MRFD-015D-E (with thermostat switch type)
STORAGE VOLUME	13 LITERS
EXTERIOR DIMENSIONS (W X H X D)	442 X372 X 284 (mm)
INTERIOR DIMENSIONS (W X H X D)	348 X 190 X 190 (mm)
RATED VOLTAGE	DC 12 V (Battery)
RATED CURRENT	3.9 A
PROTECTION	8A TUBE FUSE (built-in DC-plug, replaceable)
COOLING CAPACITY	
REFRIGERATING	+5 °C ± 2 °C AT AMBIENT TEMPERATURE 30 °C
FREEZING	-15 °C ± 2 °C AT AMBIENT TEMPERATURE 30 °C
EXTERIOR FINISH	POLYPROPYLENE (Cabinet, Door)
INTERIOR FINISH	ALUMINUM ROLLBOND EVAPORATOR(In cabinet) AND POLYPROPYLEN(Door)
INSULATING MATERIAL	POLYURETHANE FORM(Cabinet,Door:CFC free)
COOLING UNIT	SWING MOTOR TYPE HERMETICALLY SEALED LINEAR COMPRESSOR, FORCED-AIR COOLED WIRE CONDENSER.
REFRIGERANT	HFC-134a
TEMPERATURE CONTROL	AUTOMATIC TEMPERATURE CONTROL WITH ELECTRONIC THERMOSTAT.
WEIGHT	11.5 KG

2. WIRING DIAGRAM

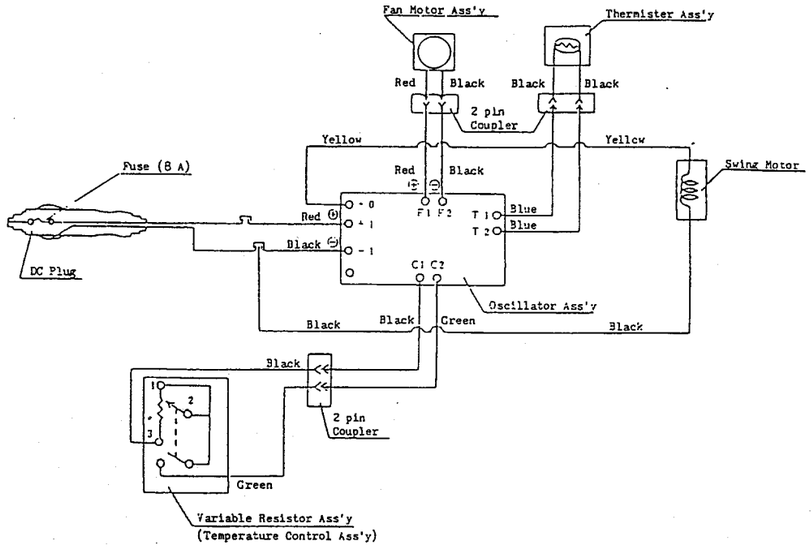

3. TROUBLE SHOOTING

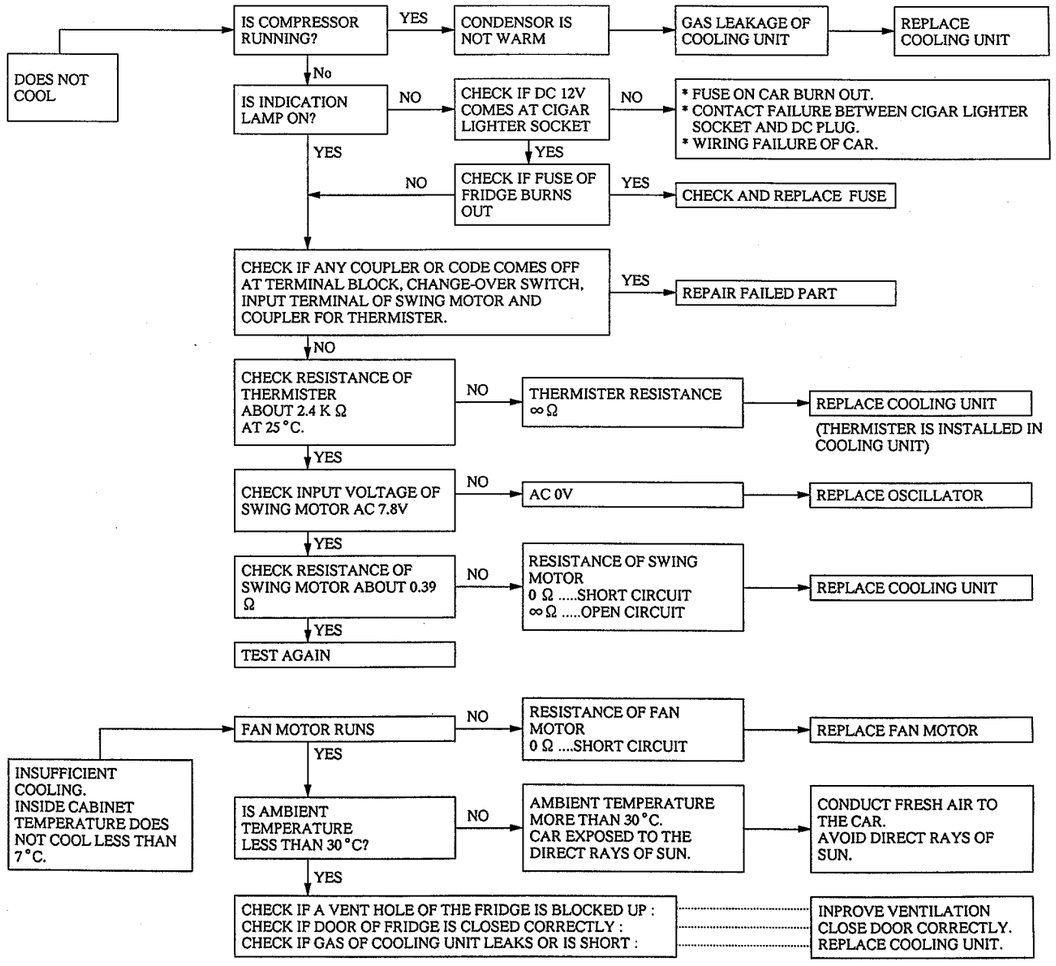

4. HOW TO CHECK EACH PARTS

1) CHECK SUPPLY VOLTAGE

Measure input voltage at cigar lighter socket of car.

Rated voltage is DC 12V.

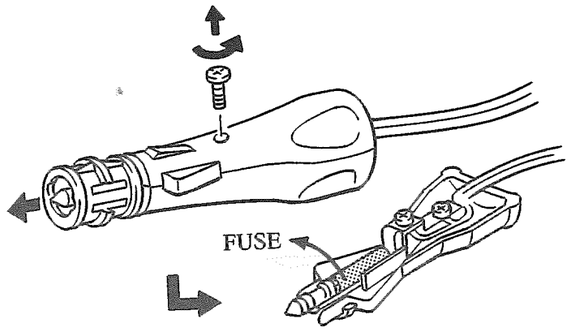

2) CHECK FUSE

Check inductance of 8A fuse in DC Input plug.

If there is no inductance, replace the fuse with new one.

3) CHECK INPUT VOLTAGE OF SWING MOTOR

Measure input voltage of Swing Motor between input terminals (yellow and black wires).

Input voltage AC 7-8 V.....Normal

Frequency 52-53 Hz.....Normal

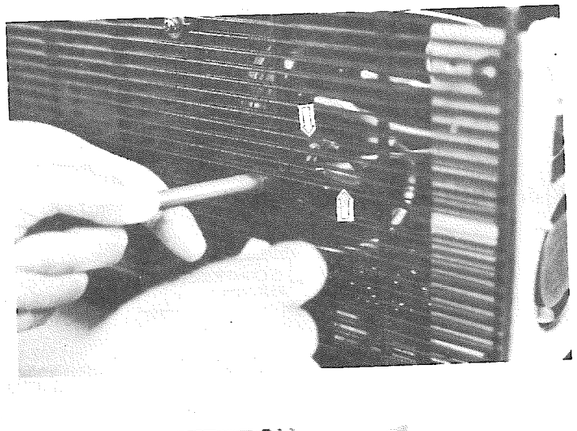



4) CHECK RESISTANCE OF SWING MOTOR

Disconnect yellow wire of Swing Motor input terminals and measure resistance between the terminals.

Resistance

∞ Ω .....Open circuit at Swing Motor

0.3 Ω ..... Short circuit

0.39 Ω .....Normal

5) CHECK OSCILLATOR OUTPUT VOLTAGE

Disconnect yellow wire at Swing Motor terminals and measure oscillator output voltage.

AC 4.5 V over..... Normal

AC 0V..... Oscillator failure

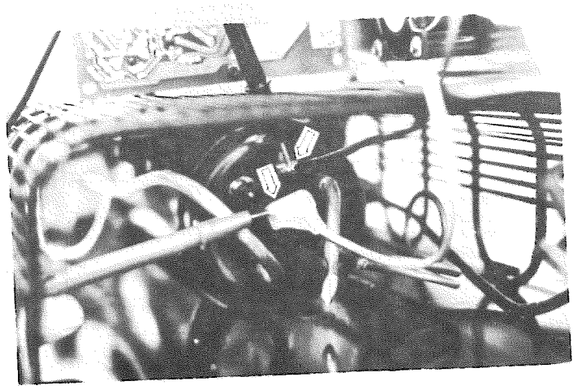

6) CHECK FAN MOTOR

If fan motor does not run under normal output voltage from oscillator. Measure resistance of the motor.

Resistance

100 K Ω ..... Normal

∞ Ω .....Open circuit of fan motor

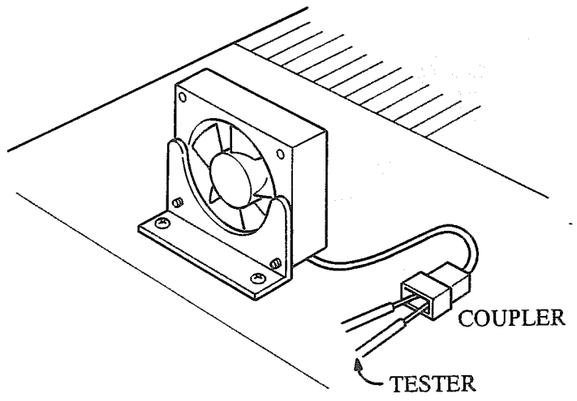

7) CHECK VARIABLE RESISTOR

Disconnect 2-pin coupler and measure resistance by use of tester.

Resistance

Thermostat Notch	Resistance
OFF (for model MRFD-015-AE)	∞ Ω .....Normal
REF, FREEZE	Approx. 10K Ω - 0 Ω .....Normal
	∞ Ω .....Open circuit

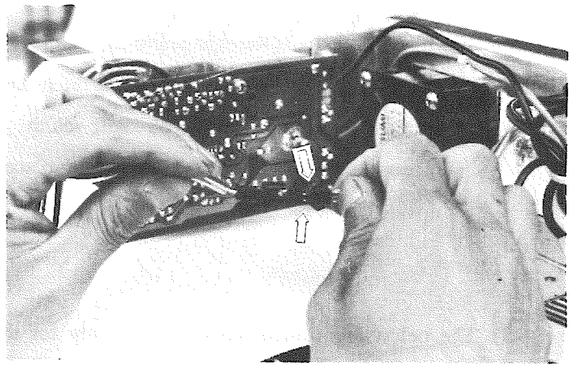

8) CHECK THERMISTER

Disconnect 2-pin couler and measure resistance of thermister.

Resiistance

Approx. 2.5K Ω (at 25 ℃)..... Normal

∞ Ω .....Open circuit

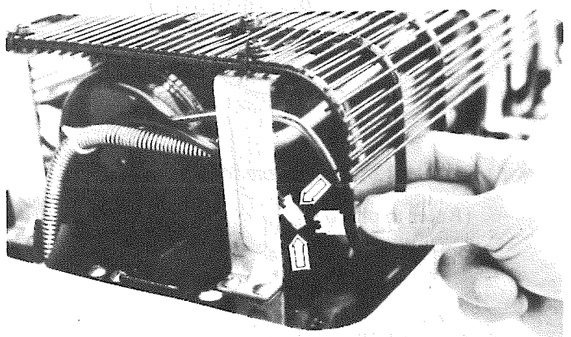

5. SERVICING OF EACH COMPONENT

HOW TO REPLACE COOLING UNIT

1) Take off door assembly
   (Refer to photo 1)
2) Take off latch (Refer to Photo 1)
3) 1. Take off cover.
   2. Take off screws.

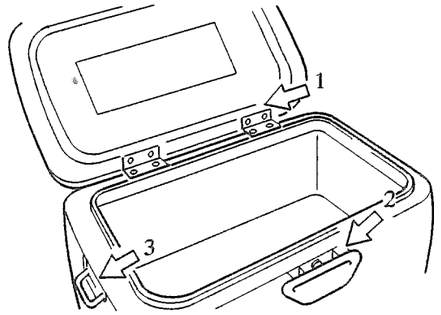

Photo 1

4) The below-mentioned work is need only for the model MRFD-015-AE :

Pull out thermostat dial. (Refer to photo 2)

Notes : In order to prevent a possible scratch and damage on door, work on soft cloth is recommendable, as fridge might be placed upside down for this work.



Photo 2

5) The below-mentioned work is need only for the model MRFD-015D-E :
   1. Pull out 4 screws of bottom case and take off bottom case. (Refer to photo 3)
   2. Take off 2 terminals of thermostat control switch.

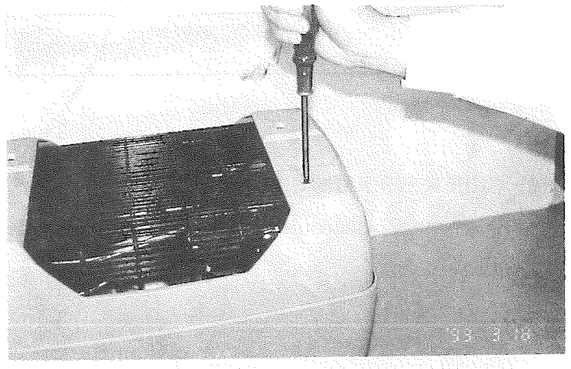

Photo 3

6) Take off 2 fixing plates for condensor.
   (Refer to photo 4)
   Pull out 6 screws.

7) Cut off fastner. (Refer to photo 4)

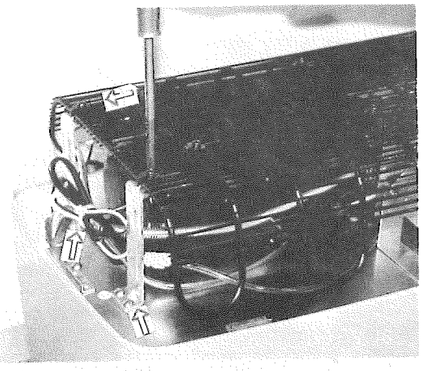

Photo 4

8) Take off coupler for thermister (Refer to photo 5)

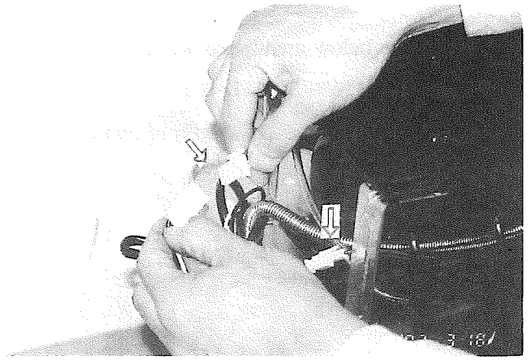

Photo 5

9) In case of MRFD-015-AE,
   1. Take off fixing plate for power supply.
   2. Pull out 3 screws for fixing of condenser and case for power supply.
      (Refer to photo 16)

   In case of MRFD-015-D-E
   1. Take off 2 fixing plates for condensor
      (Refer to photo 6)
   2. Take off fan motor

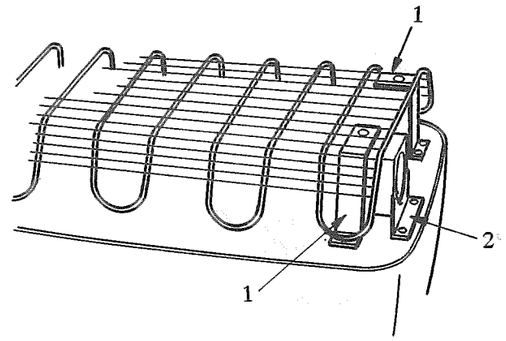

Photo 6

10) Take off oscillator (Refer to photo 7)
    Unlock 4 plastic fastners.
    (MRFD-015D-E only)

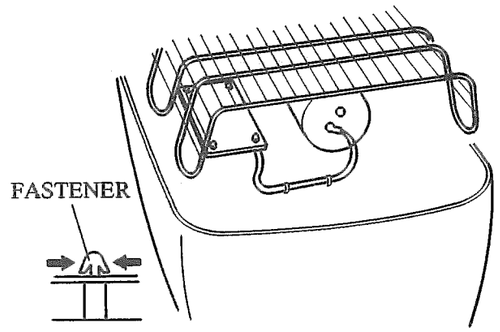

Photo 7

11) The below-mentioned work is need only for the model MRFD-015-AE :
    Take out powr supply (Refer to photo 8)

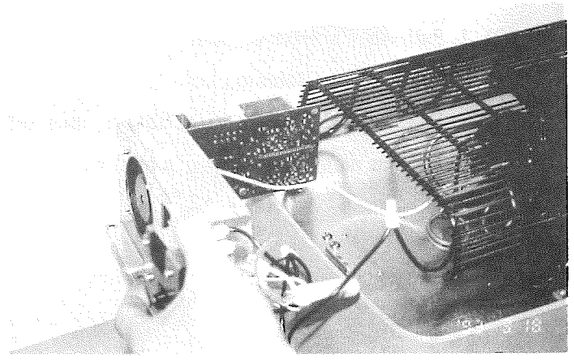

Photo 8

12) The below-mentioned work is need only for the model MRFD-015D-E :

Take out oscillator (Refer to photo 9)

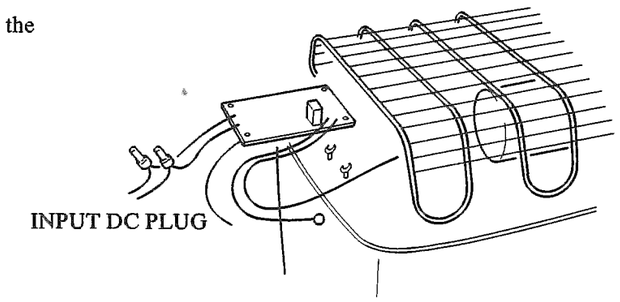

Photo 9

13) Disconnect input code for swing motor.

(Refer to photo 10)

1. Pull out (+) side coupler (yellow code)
2. either unscrew earth code (black), or cut off the connected part with earth code (MRFD-015-AE)

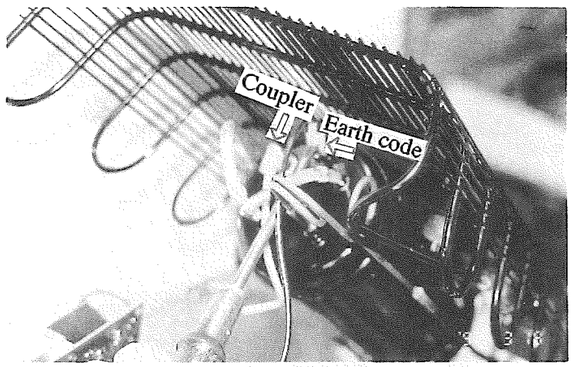

Photo 10

Replace old cooling unit with a new one following with the reverse order of disassembly.