USER'S GUIDE

Installation, Operation, and Maintenance for your product.

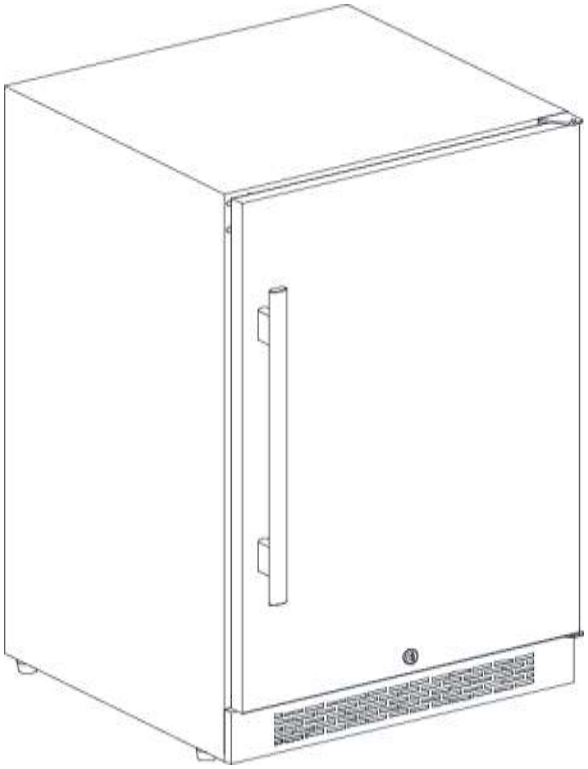

Refrigerator

Model – AFR241SSRH / AFR241SSLH

www.avallon.com 1-866-471-7427

V2.1-07122017

Important Safety Information

Improper handling can cause serious damage to the Avallon refrigerator and / or injury to the user. This refrigerator is designed for domestic use only. Do not use the unit for industrial or commercial use. Any other use may invalidate the warranty. Please review the rating label located on the rear panel of the unit for electrical and other technical data related to this unit. The unit must be used in a properly grounded wall outlet. **Please read and follow the safety information listed below to reduce the risk of fire, electric shock, or injury.**



ELECTRICAL SAFETY

- Do not exceed the power outlet ratings.
- It is recommended the refrigerator be connected on its own circuit.
- The unit must be installed in accordance with state and local electrical codes.
- A standard electrical supply (115 V, 60Hz), that is properly grounded in accordance with the National Electrical Code and local codes and ordinances, is required.
- Use outlets that cannot be turned off by a switch or pull chain.
- Always turn the unit off and unplug it from the outlet when cleaning.
- Unplug the unit if it is not going to be used for an extended period of time.
- Do not operate the unit with a power plug missing the ground plug, a damaged cord, or a loose socket.
- Be sure the refrigerator is properly grounded.
- Never plug or unplug the unit with wet hands.
- Do not bypass, cut, or remove the grounding plug.
- Do not use extension cords or power strips with this unit. You may need to contact your electrician if it is necessary to use a longer cord or if you do not have a grounded outlet. Do not modify the power cord's length or share the outlet with other appliances.
- Do not start or stop the unit by switching the circuit's power on and off.
- If the power cord is damaged, it must be replaced by the manufacturer or a qualified technician.
- Never repair the unit while it is plugged in.
- Immediately unplug the unit if it makes strange sounds, emits smells, or smoke comes out of it, and contact customer service.
- Do not remove any part of the casing unless instructed to do so by an authorized technician.
- You should never attempt to repair the unit yourself. Contact customer service for service options if the unit needs service.



GENERAL SAFETY

- To prevent back and other types of injuries, use at least two people to move and install the refrigerator.
- This appliance is not intended for use by persons, including children, with reduced physical, sensory, or mental capabilities, unless they have been given supervision or instruction concerning the use of the appliance by the person(s) responsible for their safety.
- Install the refrigerator in a well ventilated area.
- The temperature range for this refrigerator is optimized for perishable food items.
- Do not place hot or warm items into the refrigerator before they cool down to room temperature.
- This unit is designed to be installed indoors, and protected from rain, sleet, snow, and / or moisture.
- Never allow children to crawl inside the refrigerator. If you are disposing of the unit, remove the door.
- Do not use this appliance near flammable gas or combustibles, such as gasoline, benzene, thinner, etc.
- Do not place the unit near heat sources such as ovens, grills, or direct sunlight.
- Only use in an upright position on a flat, level surface and provide proper ventilation.
- Do not pinch or kink the power supply line between the unit and cabinet.
- Do not place any other appliances on top of the unit.
- Do not turn the unit upside down, on its side, or at an angle off level.
- If your model of refrigerator is equipped with a lock, take care to keep the keys away from children.
- Do not move the unit without removing the contents and securing the door in a closed position.



Note: Flammable Refrigerant Used! When handling, moving, and using the refrigerator, make sure to avoid either damaging the refrigerant tubing, or increasing the risk of a leak.

Table of Contents

Important Safety Information.....ii
Table of Contents.....iv
First Time Operating Instructions.....v
Introduction.....1
Parts Identification.....2
Open Door View.....2
90° Door View.....2
Carbon Filter.....3
Internal Fan.....3
Installing Your Refrigerator.....3
TYPES OF INSTALLATION.....4
Free-standing Installation.....4
Built-in Installation.....4
Installation Clearance Requirements.....4
LEVELING.....5
RECOMMENDED GROUNDING METHOD.....5
Installing Your Door Handle and Shelves.....5
INSTALLING THE DOOR HANDLE.....5
INSTALLING THE SHELVES.....6
REMOVING THE SHELVES.....6
Operation.....7
INSTALLATION CHECK-LIST BEFORE OPERATION.....7
USING YOUR CONTROL PANEL.....7
Power Button.....7
Increase Temperature.....7
Decrease Temperature.....7
Interior Light.....7
Internal Light.....8
Defrosting.....8
Normal Sounds.....8
Cleaning and Maintenance.....9
INTERIOR CLEANING.....9
EXTERIOR CLEANING.....9
Preparing Your Refrigerator for Storage.....9
Troubleshooting.....10

Specifications……12
Avallon Product Warranty……13

First Time Operating Instructions:

Before use, make sure all packaging labels and materials are removed from the unit. Be sure to keep track of all included parts and pieces before discarding packaging materials. It is advised that you keep the original box and packaging materials in case you need to move or ship the appliance in the future.

Allow the unit to stand for at least 24 hours before you use it; this allows the cooling components time to settle from transit. The instruction manual should be read before use.

This owner's manual is provided for reference use only. Specifications may change without prior notice. Refer to the product label on the back of your refrigerator for the latest technical information.

Introduction

Thank you for purchasing your Avallon refrigerator. Avallon is dedicated to developing products that will enhance your lifestyle with superior quality and distinctive features. Please visit www.avallon.com for more information on your product and other Avallon products.

This manual contains important information regarding the proper installation, use, and maintenance of your refrigerator. Following this manual will ensure that your product will work at its peak performance and efficiency.

Please save the original product packaging in case you need to safely transport your refrigerator.

For Your Records:

Please write down the model number and serial number below for future reference. Both numbers are located on the rating label on the back of your unit and are needed to obtain warranty service. You may also want to staple your receipt to this manual as it is the proof of your purchase, and is also needed for service under your warranty.

Model Number:

Serial Number:

Date of Purchase:

To better serve you, please do the following before contacting customer service:

- If you received a damaged product, immediately contact the retailer or dealer that sold you the product.
- Read and follow this instruction manual carefully to help you install, use, and maintain your refrigerator.
- Read the troubleshooting section of this manual as it will help you diagnose and solve common issues.
- Visit us on the web at http://www.avallon.com to download product guides, additional troubleshooting resources, and up-to-date information.
- If you need warranty service, our friendly customer service representatives are available via email at service@avallon.com or by telephone at 1 (866) 471-7427.

Parts Identification

Open Door View

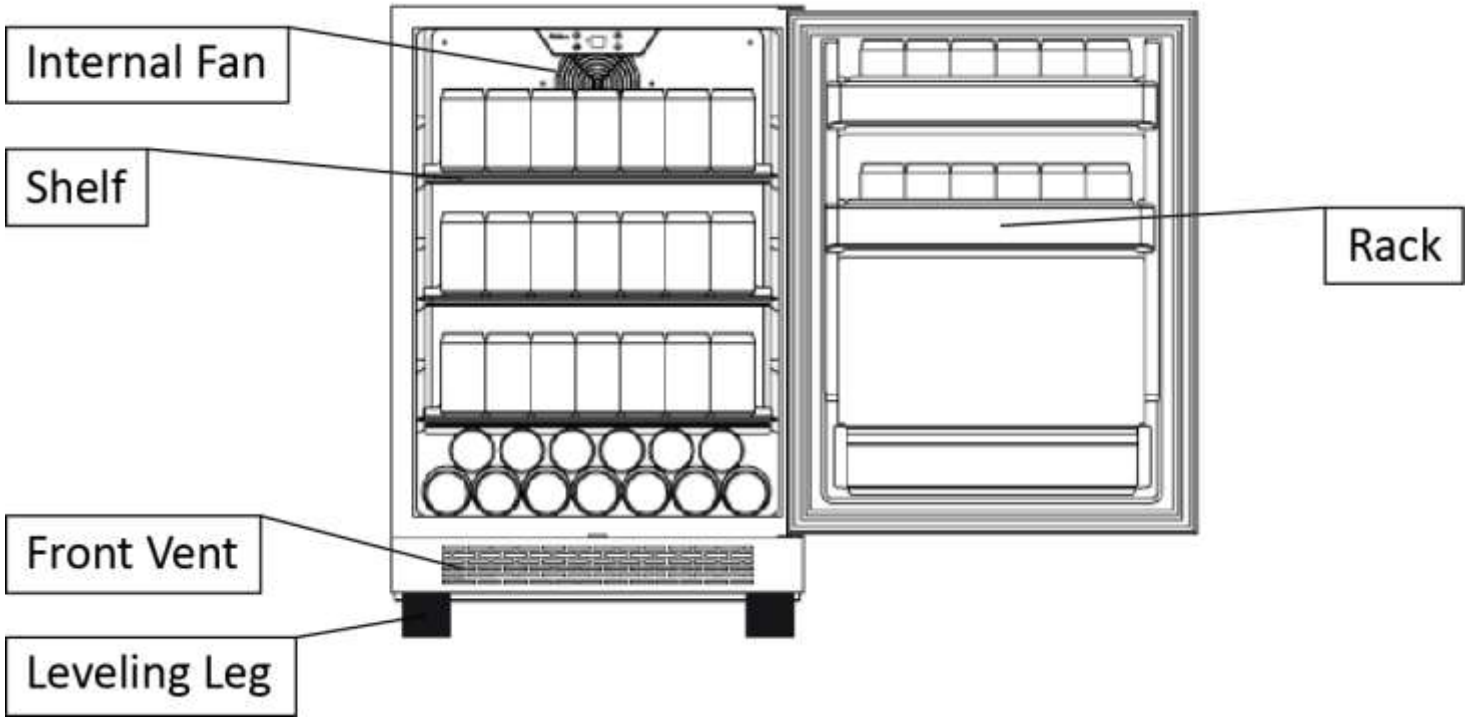

90° Door View

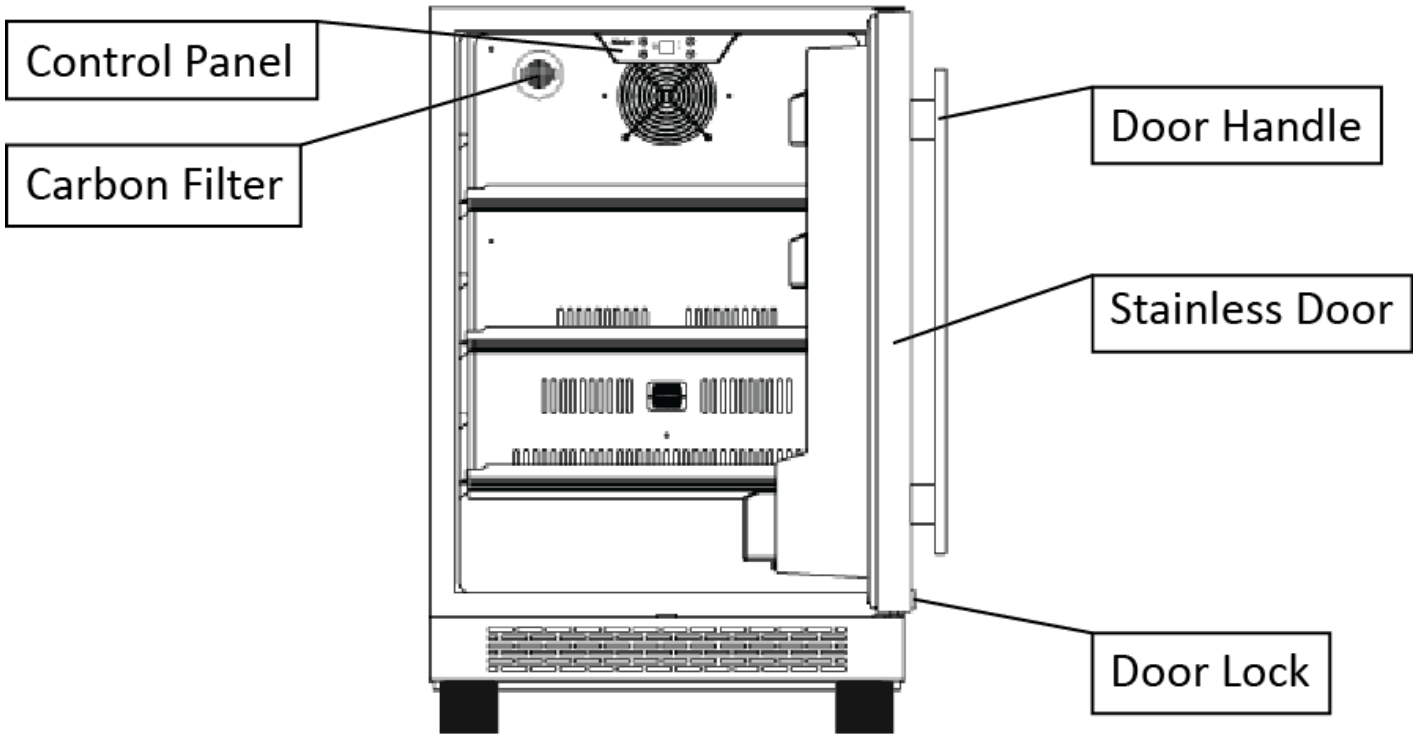

Carbon Filter

A built-in carbon filter protects your products by acting as a natural barrier against harmful odors.



Internal Fan

This is an air-cooled unit equipped with an internal fan that maintains a consistent internal temperature.

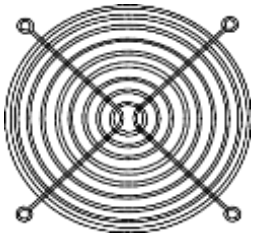

⚠

Note: The carbon filter should be replaced every 3-6 months depending on the unit's exposure level to odor. If the unit is placed in a kitchen, regular replacement every three (3) months is ideal.

⚠

Tip: Gather the model and serial number from the product label and write them down before installing the refrigerator.

Installing Your Refrigerator

The refrigerator should be installed in accordance with local electrical code requirements. It should also be placed in a location that is strong enough to support its total weight, keeping in mind that it will weigh substantially more when fully loaded than when empty.

Before you plug the refrigerator into a power supply, be sure to let it stand upright for at least 24 hours to allow the compressor's oils to settle.

⚠

Warning: Use two or more people to move and install the refrigerator. Failure to do so can result in back or other injury. Carefully remove the packaging materials. Remove any shipping tape and glue from your refrigerator before use. Do not use sharp instruments, rubbing alcohol, flammable fluids, or abrasive cleaners to remove tape or glue. These products can damage the surface of your refrigerator.

⚠

Important: Do not remove any safety, warning, or product information labels from your refrigerator.

TYPES OF INSTALLATION:

This refrigerator has been designed for free-standing or built-in installation. In every case, there must be adequate ventilation and access for service.

Free-standing Installation

A free-standing installation will allow you to install the refrigerator in almost any place you desire. You must follow the stated instructions for electrical requirements and leveling the refrigerator.

Built-in Installation

A recessed installation will allow you to install the refrigerator under a counter or in a kitchen cabinet provided the clearance space requirements around the refrigerator are followed. It is necessary to allow adequate ventilation space around the unit (make sure there is at least some ventilation room for the back of the unit). The following additional items must be observed:

1. Place the refrigerator in front of the installation location.
2. Adjust the feet and place the unit flat on the floor or on a platform depending on your installation requirements.
3. If the electrical outlet for the refrigerator is behind the cabinet, plug in the refrigerator.
4. Push the refrigerator into position.

⚠

Warning: DO NOT install the refrigerator behind a closed cabinet door.

Installation Clearance Requirements:

When installing the refrigerator under a counter, follow the recommended spacing dimensions shown.

- To ensure proper service access and ventilation, allow between 2 - 3 inches of clearance at the back as shown in the diagram.
- The installation should allow the unit to be pulled forward for servicing, if necessary.
- A standard electrical supply (115 VAC only, 60 Hz), properly grounded in accordance with National Electrical Code and local codes and ordinances, is required.

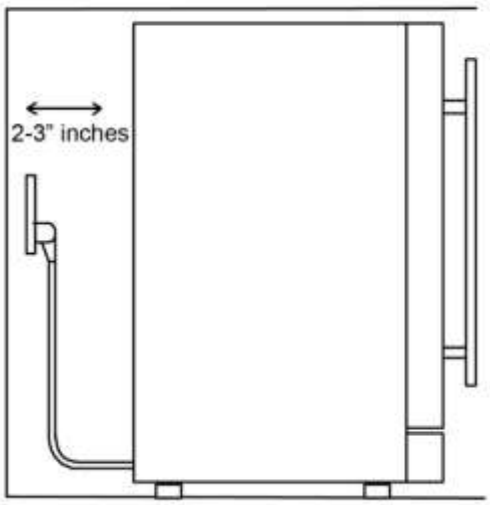

⚠

Important: Once you are ready to install the unit in a cabinet or directly on the floor, you must adjust the feet to level the refrigerator.

LEVELING:

The refrigerator should be installed on a firm and level surface that will be able to support the entire weight of a fully loaded unit. It is important for the refrigerator to be leveled in order to work properly. It can be raised or lowered by rotating the plastic sheaths around each of the feet on the bottom of the machine. If you find that the surface is not level, rotate the feet until the refrigerator becomes level. You may need to make several adjustments to level it. We recommend using a carpenter's level to check the machine. Turn the leveling feet to the right to lower that side of the refrigerator. Turn the leveling feet to the left to raise that side of the refrigerator.

RECOMMENDED GROUNDING METHOD:

For your personal safety, this appliance must be grounded. It is equipped with a power supply cord having a 3-prong grounding plug. To minimize possible shock hazard, the cord must be plugged into a mating 3-pronged wall socket, and grounded in accordance with the National Electrical Code and local codes and ordinances. If a mating wall socket is not available, it is the personal responsibility of the customer to have a properly grounded, 3-prong wall receptacle installed by a qualified electrician.



Electrical Shock Hazard!

- Plug into a grounded 3-prong outlet.
- Never remove the grounding prong from the plug.
- Never use an adapter to bypass the grounding prong.
- DO NOT use an extension cord.
- Failure to follow these instructions can result in fire, electrical shock, or personal injury.

Before you move your refrigerator into its final location, it is important to make sure you have the proper electrical connection. A standard electrical supply (115 V, 60Hz), properly grounded in accordance with the National Electrical Code and local codes and ordinances, is required. It is recommended that a separate circuit, serving only your refrigerator, be provided. Use receptacles that cannot be turned off by a switch or pull chain.

The fuse (or circuit breaker) size should be 15 Amps.

Installing Your Door Handle and Shelves

INSTALLING THE DOOR HANDLE:

1. Open the door and carefully pull the door gasket around the area where the handle is to be installed.
2. Insert each Phillips head screw through the gasket side of the door until the screw passes through the door.
3. Align the handle with the screws and tighten using a Phillips head screwdriver until the handle is flush against the door frame.
   Caution: Do not over-tighten the screws as this may cause damage to the handle or to the stainless steel door.
4. Carefully press the door gasket into its original position.

INSTALLING THE SHELVES:

1. Open the door completely.
2. Ensure that the plastic posts are installed on the left and right sides of the shelf track onto which you are attempting to install the shelf.
3. Lifting the rear of the shelf upwards above the shelf track, align the cutouts in the left and right sides of the shelves over the plastic posts mounted to the inner cabinet.
4. Gently set the shelf down on the shelf track.

REMOVING THE SHELVES:

1. Open the door completely.
2. Remove all of the contents loaded on the shelf, if applicable.
3. With the shelf pushed all the way to the rear of the unit, position the cutouts in the left & right sides of the shelves under the plastic posts on each side of the shelf track.
4. Push down on the front of the shelf while lifting up on the rear of the shelf (picture a seesawing motion) until the shelf passes over the plastic posts.
5. Pull the shelf towards the front of the unit until it is completely removed from the inner compartment.

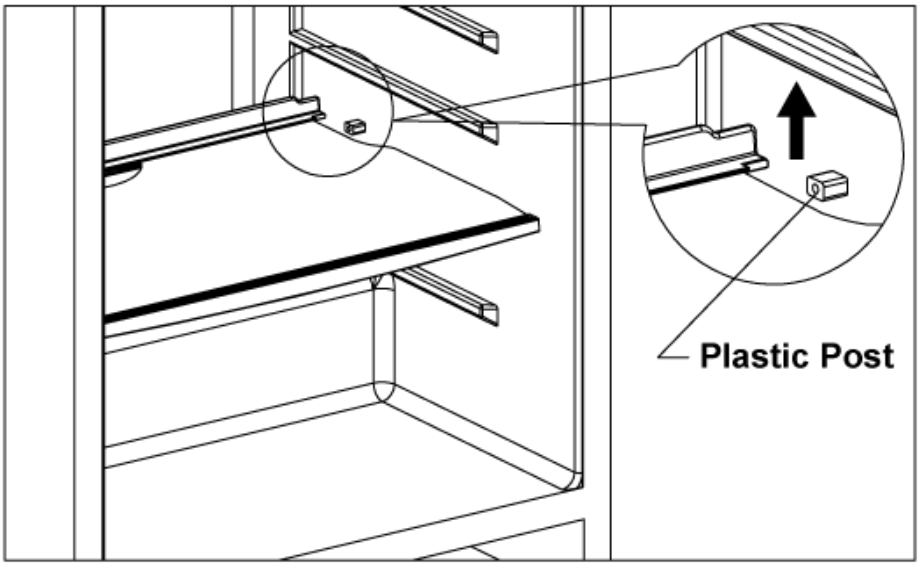

⚠

Tip: To prevent damaging the door gasket, make sure to open the door fully before pulling the shelves out of their track.

Operation

INSTALLATION CHECK-LIST BEFORE OPERATION:

1. Have all packing materials and tape been removed from the interior and exterior of the refrigerator?
2. Have the installation instructions been followed, including connecting the machine to electricity?
3. Has proper grounding been installed for the refrigerator?
4. Has the machine been leveled?
5. Is there a clearance of at least 2” to 3” at the rear for proper air circulation?

USING YOUR CONTROL PANEL:

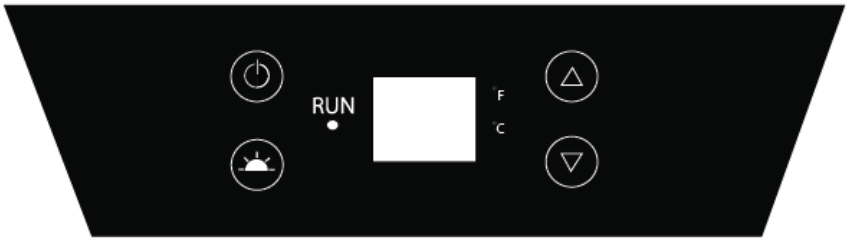

This refrigerator has a temperature range from 34° F to 50° F.

Power Button

Press and hold this button down for three seconds to power your unit on. Once pressed, the “Run” indicator light will illuminate to indicate the unit is on and running. Press and hold this button for three seconds again and the unit will power off and the “Run” Indicator light will turn off.

Increase Temperature

Press this button to increase the temperature by one (1) degree increments. 50° F is the highest available temperature on this unit.

Decrease Temperature

Press this button to decrease the temperature by one (1) degree increments. 34° F is the lowest available temperature on this unit.

Interior Light

Press this button to alternate between the two internal light colors: blue and white. Please refer to the “Internal Light” section on the next page for further details.

⚠

Note: Pressing and holding the increase and decrease temperature buttons at the same time will switch the temperature display from °F to °C.

⚠

Tip: If you powered the unit off, please wait at least five (5) minutes before powering it back on.

⚠
Warning: Allow at least 24 hours for your refrigerator to run before use to allow the temperature to acclimate. Whether your refrigerator can reach the actual set temperature depends on the ambient environmental conditions.

Internal Light

This refrigerator is equipped with top and side internal lights that can be set to a blue or white color. The internal lights will illuminate when the door is open and turn off when the door is closed.

⚠
Note: Every unit is run tested at the factory. Because of this, your model may default to either a blue or white light setting out of the box.

The automatic light feature is triggered by a sensor located on the front vent. This sensor allows the refrigerator to recognize when the door is open or closed.

Defrosting

Note that under most refrigerating settings, the unit will automatically defrost under most ambient conditions. However, on colder settings, some frost may build up. Additionally, the more humid the ambient conditions, the more frost may build up. Keep the door closed as much as possible and avoid opening the door unnecessarily to minimize frost build-up.
If frost is preventing the door from closing properly, you may need to power the unit off until the frost melts. Use a soft absorbent towel to dry the unit.

⚠
Warning: Never attempt to remove frost with a sharp object.

Normal Sounds

Your new refrigerator may make sounds that are not familiar to you. Most of the new sounds are normal. Hard surfaces like the floor or walls can make the sounds seem louder than they actually are. The following describes the kinds of sounds that might be new to you and what may be making them.

- Rattling noises may come from the flow of the refrigerant or the water line.
- Items stored on top of the refrigerator can also make noises.
- The high efficiency compressor may make a pulsating or high-pitched sound.
- The internal fan will run frequently to create a consistent internal temperature environment.
- Water running from the evaporator to the water bin may make a splashing sound.
- As each cycle ends, you may hear a gurgling sound due to the refrigerant flowing in your refrigerator.
- You may hear air being forced over the condenser by the condenser fan.

Cleaning and Maintenance

Periodic cleaning and proper maintenance will ensure efficiency, top performance, and long life.

INTERIOR CLEANING:

1. Disconnect power to the unit.
2. Open the door and remove the contents and shelves.
3. Wait until the unit defrosts.
4. With a clean cloth, wipe down the interior of the unit.
5. Reinsert the shelves and contents.
6. Reconnect power to the unit.

EXTERIOR CLEANING:

The door and cabinet may be cleaned with a mild detergent and lukewarm water solution such as two (2) tablespoons of baking soda to one (1) quart of water. Do not use solvent based or abrasive cleaners. Use a soft sponge and rinse with clean water. Wipe with a soft clean towel to prevent water spotting. If the door panel is stainless steel, it can discolor when exposed to chlorine gas and moisture. Clean stainless steel with a cloth dampened with a mild detergent and warm water solution. Never use an abrasive or caustic cleaning agent.

Preparing Your Refrigerator for Storage

If the refrigerator will not be used for a long time, or is to be moved to another place, it will be necessary to defrost the unit and dry the interior.

1. Disconnect the refrigerator from the power supply by removing the power plug from the wall socket.
2. Leave the door open to allow for air circulation and to prevent mold, mildew, and unpleasant smells.
3. Once the interior is dry and clean the unit will be ready for storage.

⚠

Caution: Store the unit out of the reach of children. If you have children, you may want to take additional precautions such as removing the door to prevent a child from being trapped inside the refrigerator.

⚠

Important: Do NOT touch the power plug when your hands are wet. NEVER unplug the unit by pulling the plug.

Troubleshooting

ISSUE	POSSIBLE CAUSE	SOLUTION
The refrigerator turns on and off frequently.	The door is being opened too often.	Minimize the number of times the door is opened.
	The door is not completely closed.	Make sure the door is completely closed.
	The door gasket is not sealing properly.	Make sure the door gasket is properly sealed.
	The refrigerator does not have the suggested ventilation.	Read and follow the “Installation Clearance Requirements” section.
The refrigerator does not turn on.	There is a power failure.	Ensure the refrigerator is plugged in and the outlet has power.
	The refrigerator is not plugged in.	Plug the unit in to a power outlet that has sufficient amperage.
	A fuse has blown or the circuit breaker is tripped.	Replace the broken fuse in your fuse box or reset the breaker.
The refrigerator will not reach the desired temperature.	The refrigerator is placed too close to a heat source.	Keep the refrigerator away from direct sunlight or other heat sources.
	The refrigerator does not have sufficient ventilation.	Read and follow the “Installation Clearance Requirements” section.
	The door is opened too frequently or for long periods of time.	Close the door tightly and do not open the door too frequently or for long periods of time.
The refrigerator is making strange noises.	Certain sounds are normal	Read the “Normal Sounds” section.
	The unit is not level or is touching another appliance.	Check to make sure the refrigerator is level and that it is not in contact with another appliance or furniture.
The body of the refrigerator is electrified.	The unit is not properly grounded.	Contact your local electrician to test your electrical grounding system.

ISSUE	POSSIBLE CAUSE	SOLUTION
Frost is forming in the refrigerator.	The environment is humid.	Through the unit uses an “auto-defrost” system, under certain conditions, manual defrosting may be required. If frost builds up, you can try running the refrigerator on a warmer temperature setting, minimizing the number of times you open the door, or unplugging the unit to allow the frost to melt.
	The door is being opened too frequently.	
The door will not shut properly.	The refrigerator is not level.	Make sure the refrigerator is on a level surface.
	The door gasket is dirty.	Clean the door gasket.
	The door gasket is not installed correctly.	Install the door gasket correctly.
	The shelves are incorrectly installed.	Install the shelves correctly.

Specifications

DESCRIPTION OF PRODUCT	Built-In Refrigerator
MODEL	**AFR241SSRH / AFR241SSLH**
VOLTAGE / FREQUENCY	AC 115 / 60 Hz
AMPERAGE	1.2 A
INPUT POWER	120 W
COLOR	Black Cabinet with Stainless Steel Door
STORAGE CAPACITY	5.5 Cu. Ft.
REFRIGERANT	R134a, 3.53 oz.
TEMPERATURE RANGE	34° F to 50° F
DIMENSIONS (HEIGHT X WIDTH X DEPTH)	34 $^{1}/_{2}$" X 23 $^{15}/_{16}$" X 24 $^{3}/_{16}$"
WEIGHT	99 Pounds

⚠

Note: Technical data and performance information are provided for reference only. Specifications are subject to change. Check the rating label on the refrigerator for the most accurate information.

Avallon Product Warranty

Warranty Period	Avallon will be responsible for:	Consumer will be responsible for:
1st year	All costs for repairing or replacing parts and/or unit which proves to be defective. All transportation costs in the first 90 days.	All transportation costs after 90 days.
Limited 2nd-5th year (compressor only)	Repairing or replacing any compressor which proves to be defective. (Labor not included)	Labor and all transportation costs

This product is warranted by Avallon and is subject to any conditions set forth as follows:

WHAT IS COVERED:

One Year Parts and Labor: For one year from the date of original retail purchase, Avallon will repair or replace any part free of charge including labor that fails due to a defect in materials or workmanship. Avallon will be responsible for all transportation costs for the first 90 days from original purchase date, after 90 days the consumer will be responsible. Labor will be performed free of charge at an authorized Avallon repair facility and will supply new, rebuilt, or refurbished parts free of charge. Avallon may request a defective part be returned in exchange for the replacement part. After the 12 month period, Avallon will no longer be responsible for labor charges incurred or replacement parts. All defective products and parts covered by this warranty will be repaired or replaced on a mail-in basis to an Avallon authorized repair facility.

Five Year Limited Warranty (Compressor– Labor Not Included): In the second through fifth year from the date of original retail purchase, Avallon will replace the compressor free of charge. The consumer will be responsible for all transportation and labor costs. Avallon will supply a new, rebuilt, or refurbished compressor and may request for the defective compressor to be returned in exchange. This limited 5-Year warranty is for the compressor only and does not include labor.

All warranties apply to the original purchaser only, and only covers defects in workmanship experienced during operation of the product under normal service, maintenance, and usage conditions. This warranty applies to the purchase and use of this product in residential settings within the United States of America. All products and parts replaced by Avallon under warranty service become the property of Avallon. All defective products and parts covered by this warranty will be repaired or replaced on a mail-in basis to an Avallon authorized repair facility.

Exceptions: Commercial or Rental Use Warranty: 90 days labor and parts from date of original purchase. No other warranty applies.

WHAT IS NOT COVERED- The following limitations apply to the coverage of this warranty. This warranty does not cover:

Labor charges for installation, setup or training to use the product. Shipping damage, and any damage caused by improper packaging for shipment to an authorized service center, and any damaged caused by improper voltage or any other misuse, including abnormal service, handling, or usage. Cosmetic damage such as scratches and dents. Normal wear and tear on parts or replacement of parts designed to be replaced, e.g. filters, cartridges, batteries. Service trips to deliver, pick-up, or repair, install the product, or to instruct in proper usage of the product. Damages or operating problems resulting from misuse, abuse, operation outside environmental specifications, uses contrary to instructions provided in the owner's manual, accidents, acts of God, vermin, fire, flood, improper installation, unauthorized service, maintenance negligence, unauthorized installation or modification, or commercial use. Labor, service transportation, and shipping charges for the removal and replacement of defective parts, beyond the initial 12 month period. Products that have been modified to perform outside of specifications without the prior written permission of Avallon. Products lost in shipment, or theft. Products sold AS IS or from an unauthorized reseller. Products that have had their serial numbers removed, defaced, or with serial numbers that have been invalidated. Damage from other than normal household use. Replacement or repair of household fuses, circuit breakers, wiring or plumbing. Damage to personal property from use of product. Damage from service other than from an authorized Avallon-repair facility. Hoses, knobs, lint trays and all attachments, accessories and disposable parts. Any service charges not specifically identified as normal such as normal service area or hours. Any special or consequential damages arising out of the use of the product.

OBTAINING WARRANTY SERVICE: If you believe your product is defective, contact Avallon Customer Support for troubleshooting assistance and warranty service at www.avallon.com or call 1-866-471-7427. Before contacting Customer Support you are required to have your model number, serial number and proof of purchase available upon request. Once an Avallon authorized representative has confirmed that your product is defective and eligible for warranty service, the product must be returned to an Avallon authorized repair facility. Avallon is not responsible for damage resulting from shipper mishandling or improper packaging. Do not return a defective product to the place of purchase. Products received without a return authorization number will be refused.

THIS WARRANTY IS IN LIEU OF ANY OTHER WARRANTY, EXPRESS OR IMPLIED, INCLUDING WITHOUT LIMITATION, ANY WARRANTY OF MERCHANTABILITY OR FITNESS FOR A PARTICULAR PURPOSE. TO THE EXTENT ANY IMPLIED WARRANTY IS REQUIRED BY LAW, IT IS LIMITED IN DURATION TO THE EXPRESS WARRANTY PERIOD ABOVE. NEITHER THE MANUFACTURER NOR ITS DISTRIBUTORS SHALL BE LIABLE FOR ANY INCIDENTAL, CONSEQUENTIAL, INDIRECT, SPECIAL, OR PUNITIVE DAMAGES OF ANY NATURE, INCLUDING WITHOUT LIMITATION, LOST REVENUES OR PROFITS, OR ANY OTHER DAMAGE WHETHER BASED IN CONTRACT, TORT, OR OTHERWISE. IN NO EVENT AND UNDER NO CIRCUMSTANCE OF ANY TYPE OR KIND SHALL THE SELLER, MANUFACTURER AND/OR DISTRIBUTOR BE LIABLE FOR ANY REASON, UNDER ANY THEORY, FOR MORE THAN THE BASIC COST OF THE PRODUCT TO THE PURCHASER OR END USER. SOME STATES DO NOT ALLOW THE EXCLUSION OF INCIDENTAL OR CONSEQUENTIAL DAMAGES, SO THE ABOVE EXCLUSION MAY NOT APPLY TO YOU. THIS WARRANTY GIVES YOU SPECIFIC LEGAL RIGHTS. YOU MAY HAVE OTHER RIGHTS THAT VARY FROM STATE TO STATE.