FRIGIDAIRE

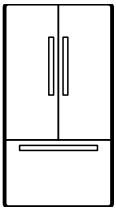

Refrigerator

use & care

Introduction....2
Important Safety Information....3
Features....6
Installation....7
Door Removal....9
Door Handle Installation....11
Water Supply Connection (some models)....12
Controls and Settings....14
Ice Maker (some models)....17
Storage Features....18
Storing Food and Saving Energy....20
Normal Operating Sounds....21
Filter Replacement....22
Care and Cleaning....24
Troubleshooting....26
Limited Warranty....29

A21785803 (April 2024)

Welcome to our **family**

Thank you for bringing Frigidaire into your home! We see your purchase as the beginning of a long relationship together.

This manual is your resource for the use and care of your product. Please read it before using your appliance. Keep it handy for quick reference. If something doesn't seem right, the troubleshooting section will help you with common issues.

FAQs, helpful tips and videos, cleaning products, and kitchen and home accessories are available at Frigidaire.com.

We are here for you! Visit our website, chat with an agent, or call us if you need help. We may be able to help you avoid a service visit. If you do need service, we can get that started for you.

Let's make it official! Be sure to register your product.

Keep your product info here so it's easy to find.

Model Number _____

Serial Number _____

Purchase Date _____

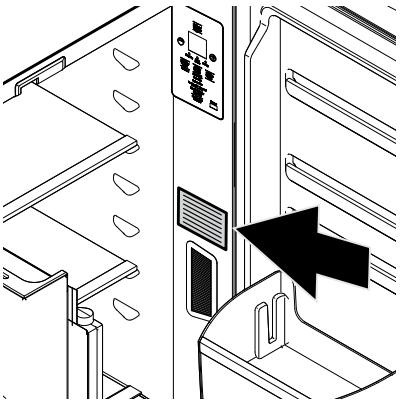

Serial Number Location

Installation Checklist

Doors

- ❒ Handles are secure and tight
- ❒ Door seals completely to cabinet on all sides

Leveling

- ❒ Refrigerator is level side-to-side and slightly elevated in front to assist with door and drawer closing (front should be higher than back)
- ❒ Cabinet is setting solid on all corners

Electrical Power

- ❒ House power turned on
- ❒ Refrigerator plugged in

Ice Maker (some models)

- ❒ House water supply connected to refrigerator (**Warning:** Potable water supply only.)
- ❒ No water leaks present at all connections - recheck in 24 hours
- ❒ Ice maker is turned ON

Final Checks

- ❒ Shipping material removed
- ❒ Fresh food and freezer temperatures set
- ❒ Registration card sent in

WARNING

Please read all instructions before using this appliance.

Safety Definitions

This is the safety alert symbol. It is used to alert of potential personal injury hazards. Obey all safety messages that follow this symbol to avoid possible injury or death.

DANGER

DANGER indicates an imminently hazardous situation which, if not avoided, will result in death or serious injury.

WARNING

WARNING indicates a potentially hazardous situation which, if not avoided, could result in death or serious injury.

CAUTION

CAUTION indicates a potentially hazardous situation which, if not avoided, may result in minor or moderate injury.

IMPORTANT

IMPORTANT indicates installation, operation or maintenance information which is important but not hazard-related.

DANGER



DANGER Risk of fire or explosion. Flammable refrigerant used. Do not use mechanical devices to defrost refrigerator. Do not puncture refrigerant tubing.

DANGER Risk of fire or explosion. Flammable refrigerant used. To be repaired only by trained service personnel. Use only manufacturer-authorized service parts. Any repair equipment used must be designed for flammable refrigerants. Follow all manufacturer repair instructions. Do not puncture refrigerant tubing.

CAUTION



CAUTION Risk of fire or explosion. Dispose of refrigerator properly in accordance with the applicable federal or local regulations. Flammable refrigerant used.

CAUTION Risk of fire or explosion due to puncture of refrigerant tubing. Follow handling instructions carefully. Flammable refrigerant used.

WARNING

CALIFORNIA RESIDENTS ONLY
Cancer and Reproductive Harm
www.P65Warnings.ca.gov

IMPORTANT SAFETY INFORMATION

Child Safety

This appliance is not intended for use by persons (including children) with reduced physical, sensory or mental capabilities, or lack of experience and knowledge, unless they have been given supervision or instruction concerning use of the appliance by a person responsible for their safety.

Destroy or recycle the carton, plastic bags, and any exterior wrapping material immediately after the refrigerator is unpacked. Children should **NEVER** use these items to play. Cartons covered with rugs, bedspreads, plastic sheets or stretch wrap may become airtight chambers, and can quickly cause suffocation.

Safety Instructions

- DO NOT store or use gasoline, or other flammable liquid within or in the vicinity of this appliance. Read Product Label for warnings regarding flammability and other hazards.
- DO NOT store explosive substances such as aerosol cans with a flammable propellant in this appliance.
- DO NOT operate the refrigerator in the presence of explosive fumes.
- Avoid contact with any moving parts of automatic ice maker.
- Remove all staples from the carton. Staples can cause severe cuts, and also destroy finishes if they come in contact with other appliances or furniture.

WARNING

Do not use electrical appliances inside the food storage compartments of the appliance unless they are of the type recommended by the manufacturer.

Proper Disposal of your Appliance

Risk of child entrapment

Child entrapment and suffocation are not problems of the past. Junked or abandoned appliances are still dangerous – even if they will sit for "just a few days". If you are getting rid of your old appliance, please follow the instructions below to help prevent accidents.

We strongly encourage responsible appliance recycling/disposal methods. Check with your utility company or visit energystar.gov/products/recycle for more information on recycling your old appliance.

Before you throw away your old appliance:

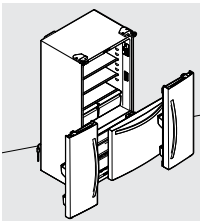

- Remove door.
- Leave shelves in place so children may not easily climb inside.
- Have refrigerant removed by a qualified service technician.

IMPORTANT

CFC/HCFC Disposal

Your old appliance may have a cooling system that used CFCs or HCFCs (chlorofluorocarbons or hydrochlorofluorocarbons). CFCs and HCFCs are believed to harm stratospheric ozone if released to the atmosphere. Other refrigerants may also cause harm to the environment if released to the atmosphere.

If you are throwing away your old appliance, make sure the refrigerant is removed for proper disposal by a qualified technician. If you intentionally release refrigerant, you may be subject to fines and imprisonment under provisions of environmental legislation.

WARNING

These guidelines must be followed to ensure that safety mechanisms in this appliance will operate properly.

Electrical information

- Plug the appliance into its own dedicated 115 Volt, 60 Hz., 15 Amp, AC only electrical outlet. The power cord of the appliance is equipped with a 3-prong grounding plug for your protection against electrical shock hazards. Plug it directly into a properly grounded 3-prong receptacle. Install the receptacle in accordance with local codes and ordinances. Consult a qualified electrician. Avoid connecting the appliance to a Ground Fault Interrupter (GFI) circuit. Do not use an extension cord or adapter plug.
- If the power cord is damaged, an authorized service technician should replace it to prevent any risk.
- Never unplug the appliance by pulling on the power cord. Always grip the plug firmly, and pull straight out from the receptacle to prevent damaging the power cord.
- Unplug the appliance before cleaning to avoid electrical shock.
- Performance may be affected if the voltage varies by 10% or more. Operating the appliance with insufficient power can damage the compressor. Such damage is not covered under your warranty.
- Do not plug the unit into an electrical outlet controlled by a wall switch or pull cord to prevent the appliance from being turned off accidentally.

IMPORTANT

To turn off power to your appliance you must unplug the power cord from the electrical outlet.

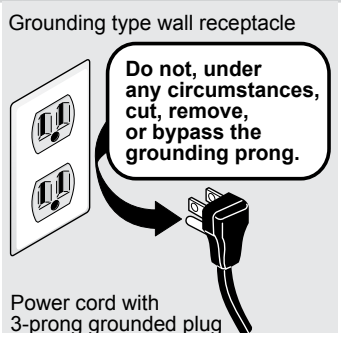

6 FEATURES

✶Features may vary according to model

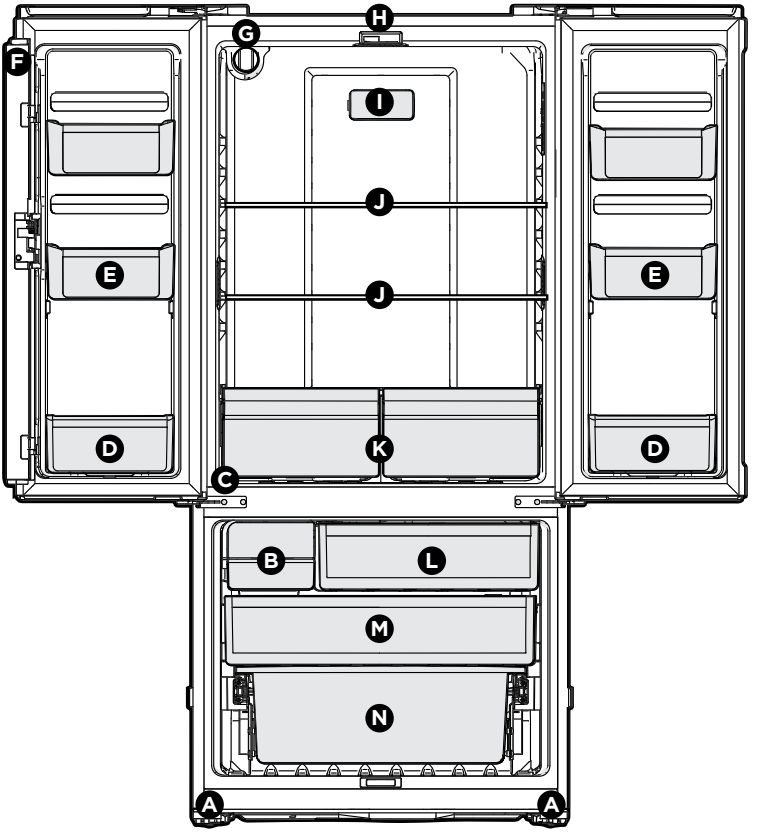

A	Anti-Tip Legs
B	✶Ice Maker (some models)
C	Adjustable Hinges
D	Door Bins
E	Adjustable Door Bins
F	Flipper Mullion
G	✶Water Filter (some models)

H	Flipper Guide
I	Air Filter
J	Spillsafe® Shelves
K	CrispSeal™ Drawers
L	✶Freezer Drawer (some models)
M	Middle Freezer Drawer
N	Freezer Basket

IMPORTANT

Accessories are available for your appliance and may be purchased at Frigidaire.com or by calling 1-800-374-4432 (Frigidaire.ca or 1-800-265-8352 in Canada) or from an authorized seller.

Tools Necessary:

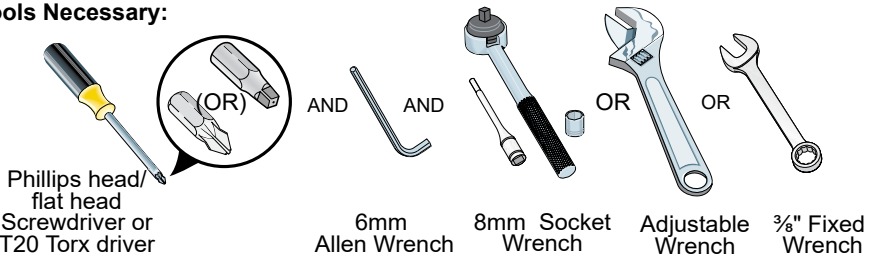

This Use & Care Manual provides general installation and operating instructions for this model. We recommend using a service or kitchen contracting professional to install the refrigerator. Use the appliance only as instructed in this Use & Care Manual. **Before starting the appliance, follow these important first steps.**

Location

- Choose a place that is near a grounded, non-GFCI, electrical outlet. **Do Not** use an extension cord or an adapter plug.
- If possible, place the appliance out of direct sunlight and away from the range, dishwasher, or other heat sources.
- The appliance must be installed on a floor that is level and strong enough to support a fully loaded appliance.
- Consider water supply availability for models equipped with an automatic ice maker.

WARNING

This appliance is intended for use in residential household and similar interior applications such as:

- Kitchen / Kitchenette
- Pantry Room
- Basement
- Enclosed Garage
- Other interior residential type environments

CAUTION

Do Not install the appliance where the temperature will drop below 55°F (13°C) or rise above 110°F (43°C). The compressor will not be able to maintain proper temperatures inside the appliance.

WARNING

Installation

Allow the following clearances for ease of installation, proper air circulation, and plumbing and electrical connections:

Sides & Top	⅜ inch (9.5 mm)
Back	1 inch (25.4 mm)

NOTE

If your appliance is placed with the door hinge side against a wall, you may have to allow additional space for the handle so the door can be opened wider.

Door opening

The appliance should be positioned to allow easy access to a counter when removing food. For best use of refrigerator drawers and freezer baskets, the appliance should be in a position where both can be fully opened.

Flipper Mullion

Adjust Flipper Mullion for proper connection with the mullion guide by ensuring the flipper mullion is folded and perpendicular to the fresh food door. If the mullion guide is not in the correct position, it could prevent the door from closing completely.

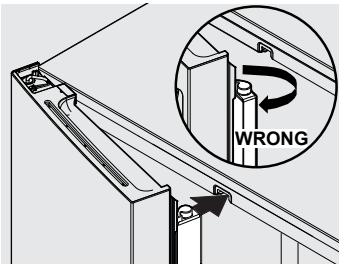

Cabinet Leveling / Door Alignment (if necessary)

Guidelines for final positioning of refrigerator:

- Rest all 4 corners of the cabinet firmly on the floor.
- Slightly elevate the front to ensure doors close and seal properly.
- Align and level the doors with each other.

You can meet most of these conditions by raising or lowering the adjustable front rollers.

To level the cabinet using the front rollers:

1. Slightly open freezer drawer to reveal adjustable rollers at bottom of cabinet.
2. Make initial cabinet adjustments by using the front roller height adjusting screws. Use a ⅜" socket wrench to turn the adjustment screws (1 per side).

   To raise unit: turn the adjustment screw clockwise.

   To lower unit: turn adjustment screw counterclockwise.

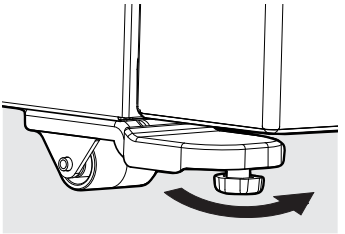

3. Ensure both doors are bind-free with their seals touching the cabinet on all 4 sides and the cabinet is stable.
4. After you level the unit, lower the anti-tip leg until it firmly contacts the floor. You may need to use an adjustable wrench for adjustment.

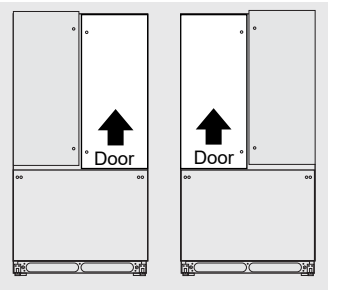

If the doors are not aligned, lift the lower door up and insert the washer (two are included in the plastic bag in the Crisper) on the center hinge pin. This will raise the door to be aligned with the other door.

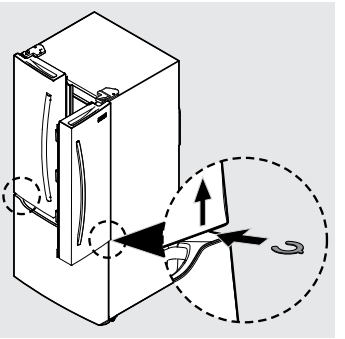

Getting through narrow spaces

If refrigerator will not fit through an entrance area, doors can be removed. Check first by measuring the entrance.

To prepare for removing the doors:

1. Make sure the electrical power cord is unplugged from the wall outlet.
2. Remove any food from the door shelves and close the doors.

To remove the refrigerator doors:

1. Open doors to 90°.

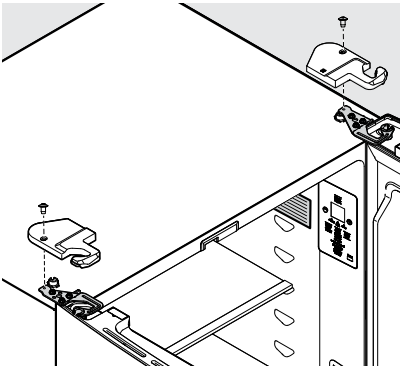

2. Trace lightly around the door's top hinges with a pencil. This makes reinstallation easier.
3. Disconnect electrical harness running from door to hinge cover.

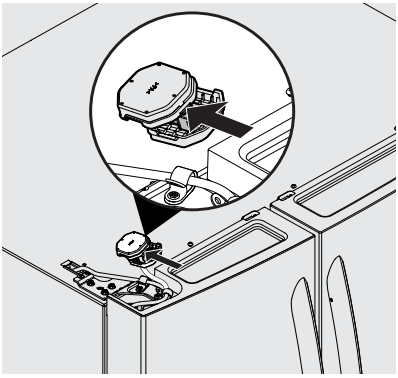

CAUTION

Be sure doors are set aside in a secure position where they cannot fall and cause personal injury, or damage to the doors or handles.

4. Remove three 8 mm bolts from both top hinges. Lift doors up off lower hinges and carefully set aside..

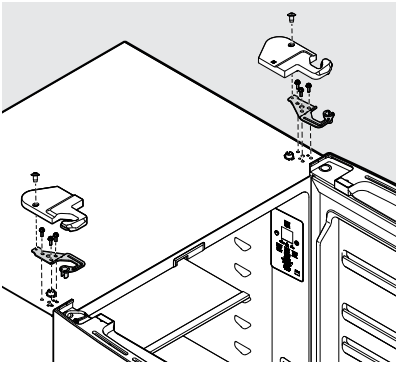

5. Open the bottom drawer and remove the center hinge pin using an adjustable wrench and set it aside. Remove the center hinge by unscrewing the 3 center hinge screws.

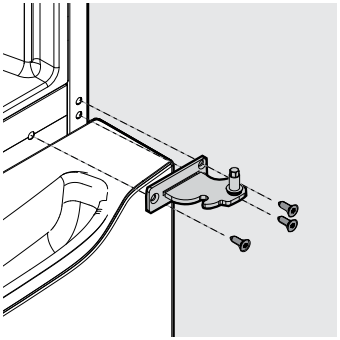

Center Hinge Removal

6. To reinstall doors, reverse procedure.

Once both doors are in place, ensure they are aligned with each other and level (See **INSTALLATION** for more details), and replace the top hinge cover.

10 DOOR REMOVAL

Removing Freezer Drawer

Features vary by model

CAUTION

Drawer is heavy. Use caution when lifting.

1. Open drawer and fully extend.
2. Remove the freezer drawer.
3. Remove the freezer basket.
4. Inside the cabinet, press the 2 tabs on both sides to release the sliders.
5. Remove the drawer with brackets and sliders.

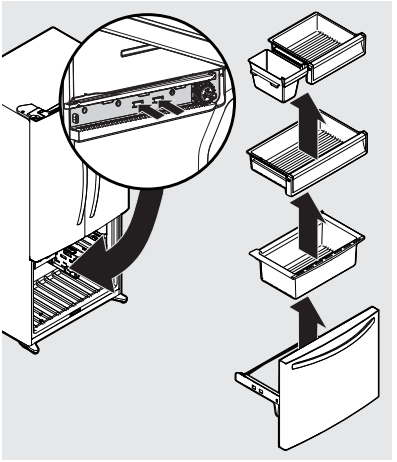

Reinstalling Freezer Drawer

1. Place drawer with brackets and sliders inside the cabinet and click into place.
2. Replace the basket.

NOTE

For additional instructions, see **STORAGE FEATURES**.

CAUTION

Wear gloves and safety goggles. Use extreme CAUTION when installing these handles.

Door Handle Mounting Instructions

1. Remove handles from carton and any other protective packaging.
2. Position fresh food handle end caps over upper and lower pre-installed shoulder bolts (A) that are fastened into door, ensuring the holes for the set screws are facing toward the opposite door.
3. While holding handle firmly against door, fasten upper and lower Allen set screws (B) with supplied Allen wrench.
4. Repeat steps 2 and 3 to install opposite handle. Ensure the holes for the set screws are facing toward the first door.
5. Position freezer drawer handle end caps over left and right pre-installed shoulder bolts (A) that are fastened to the door, ensuring the holes for the set screws are facing down.
6. While holding handle firmly against door, loosely tighten right Allen set screw (B) with supplied Allen wrench until there is no gap between handle and door.
7. Still holding the handle firmly to the door, firmly tighten left Allen set screw (B) with supplied Allen wrench.
8. Return to the right Allen set screw (B) and firmly tighten with supplied Allen wrench.

Mounting Refrigerator Handles

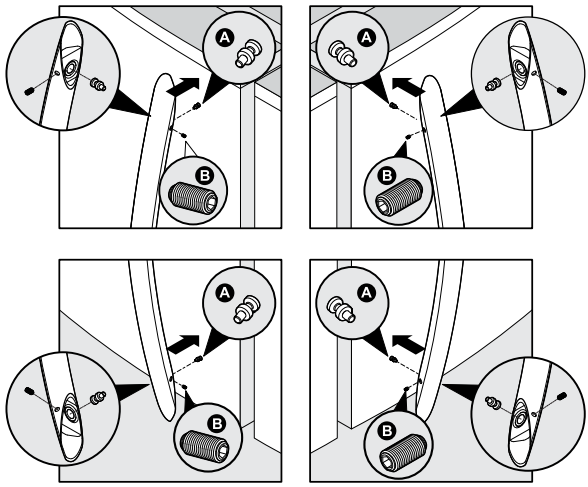

Mounting Freezer Drawer Handle

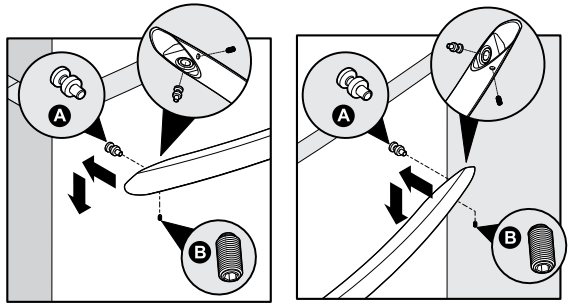

NOTE

When tightening the Allen set screws, it is imperative to apply force to the longer arm of the Allen wrench supplied in the handle packaging.

NOTE

Tighten all set screws so the screw is below the surface of the handle. Draw the handles tight to doors/drawer with no gaps. Opening the opposite door while tightening the Allen screw makes installation easier.

The door handle may loosen over time or if it was installed improperly. If this happens, tighten the set screws on the handles.

12 WATER SUPPLY CONNECTION (SOME MODELS)

WARNING

To avoid electric shock, which can cause death or severe personal injury, disconnect the refrigerator from electrical power before connecting a water supply line to the refrigerator.

CAUTION

To Avoid Property Damage:

- Use Copper or Stainless Steel braided tubing for the water supply line. Do not use water supply tubing made of ¼ in. plastic. Plastic tubing greatly increases the potential for water leaks, and the manufacturer will not be responsible for any damage if you use plastic tubing for the supply line.
- DO NOT install water supply tubing in areas where temperatures fall below freezing.
- Chemicals from a malfunctioning water softener can damage the ice maker. If you use a water softening system, ensure the softener is maintained and working properly.

IMPORTANT

Ensure the water supply line connections comply with all local plumbing codes.

To install the water supply line, the following are needed:

- Basic Tools: adjustable wrench, flathead screwdriver, and Phillips™ screwdriver
- Access to a household cold water line with water pressure between 30 and 100 psi.
- A water supply line made of ¼ in. (6.4 mm) OD, copper or stainless steel tubing. To determine the length of tubing needed, measure the distance from the ice maker inlet valve at the back of the refrigerator to the cold water pipe. Then add approximately 6 ft. (1.8 m.), so you can move the refrigerator out for cleaning.
- A shutoff valve to connect the water supply line to the household water system. DO NOT use a self-piercing type shutoff valve.
- Do not reuse compression fitting or use thread seal tape.
- A compression nut and ferrule (sleeve) for connecting a copper water supply line to the ice maker inlet valve.

NOTE

Check with local building authority for recommendations on water lines and associated materials prior to installing refrigerator. Depending on local/state building codes, We recommend you use **Smart Choice**® water line kit 5304437642 with a 6 ft. (1.8 m.) Stainless Steel Water Line on homes with existing valves. Please refer to Frigidaire.com for more information.

WATER SUPPLY CONNECTION (SOME MODELS)

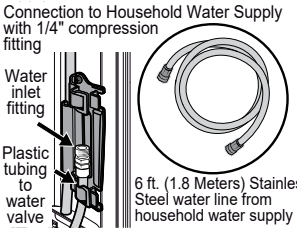

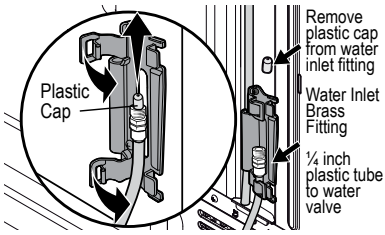

To Connect Water Tube to Household Water Supply

1. Disconnect refrigerator from electrical power source.
2. Place end of water supply line into sink or bucket. Turn ON water supply and flush supply line until water is clear. Turn OFF water supply at shutoff valve.

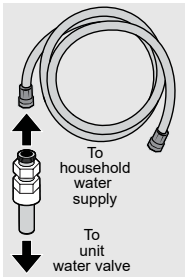

3. Open the locking clips and grab water line coming from the refrigerator. Remove plastic cap from water inlet fitting and discard cap.

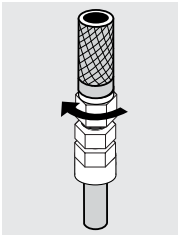

4. If using (recommended) stainless steel braided tubing - the nut and ferrule are already assembled on the tubing. Slide compression nut onto water inlet fitting and finger tighten.
5. Using two ½" wrenches (one to hold the household water line nut and the other to hold the water inlet fitting nut), tighten a half turn with wrench. DO NOT overtighten.

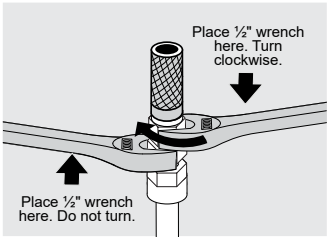

6. Replace the connected tubes into the clips and lock clips back in place to keep the tubing in the right position.
7. Turn ON water supply at shutoff valve and tighten any connections that leak.
8. Reconnect refrigerator to electrical power source.
9. Ensure ice maker is turned ON.
10. Purge air from Ice and Water Dispenser System by operating the water dispenser for 3-4 minutes. This will require dispensing several glasses of water.

CONTROLS AND SETTINGS

Ice Maker Model

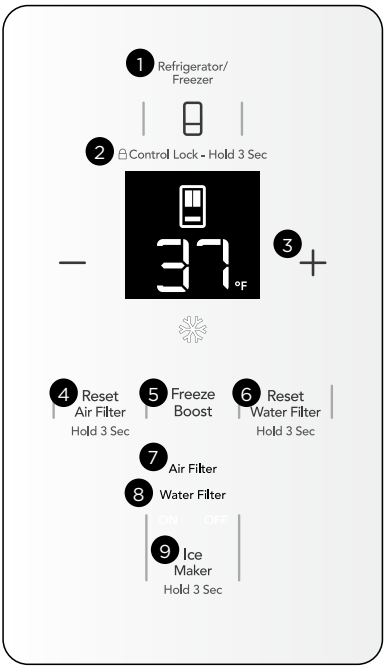

Non-Ice Maker Model

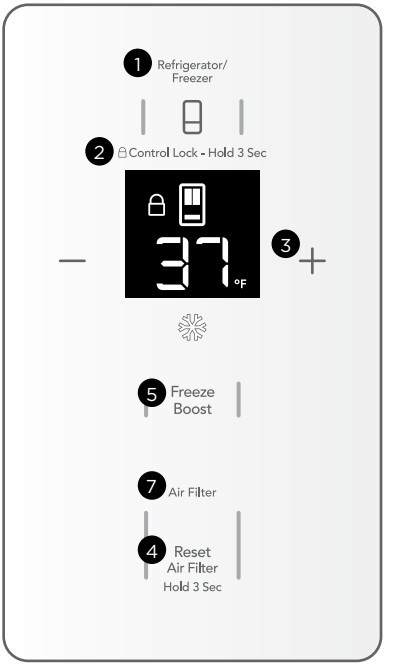

1 **Temperature Control** Choose the compartment by pressing ▯ to change the temperature in that compartment. Adjust the temperature with the **—** /**+** keys.

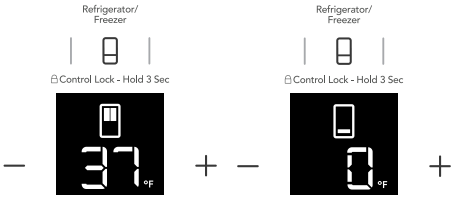

2 **Control Lock** Press to lock the appliance control display. When locked, other key functions are disabled. This prevents accidentally changing settings when cleaning. Lock the internal appliance control display for child safety and cleaning.

3 **°F/°C** toggles the temperature mode between Fahrenheit and Celsius. Press and hold **Freeze Boost** and **+** for 5 seconds. A tone confirms the change.

4 **Reset Air Filter** illuminates when it is time to replace the air filter. See **FILTER REPLACEMENT** for instructions on how to replace the air filter. After changing the air filter, reset the alert by pressing and holding **Reset Air Filter** for 3 seconds.

5 Prior to grocery shopping, we recommend you activate **Freeze Boost** to freeze your food faster. It remains active for up to 24 hours before automatically deactivating or you manually exit. Press **Freeze Boost** to turn the function off. This resets the freezer to the previous temperature setting.

6 **Reset Water Filter** illuminates when it is time to replace the water filter. See **FILTER REPLACEMENT** for instructions on how to replace the water filter. After changing the water filter, reset the alert by pressing and holding **Reset Water Filter** for 3 seconds.

7 **Air Filter** automatically lights up when the it's time to change the air filter, typically after 6 months.

8 **Water Filter** automatically lights up when the it's time to change the water filter, typically after 6 months.

9 **Ice Maker** Press and hold for 3 seconds to turn the ice maker on/off. When the indicator is lit, the ice maker is on. When the indicator is not lit, the ice maker is OFF and will stop making ice. While off, ice dispensing can continue as long as there is ice in the bucket. When ice maker is off and ice is dispensing, the indicator will blink.

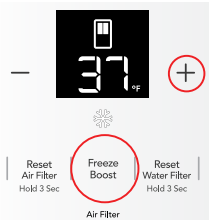

Fahrenheit

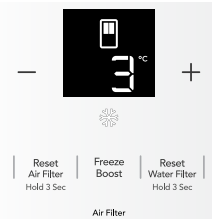

Celsius

NOTE

The recommended settings for a product installed in a kitchen is 37˚F for the fresh food compartment and 0˚F for the freezer.

IMPORTANT

If food is freezing in the fresh food compartment, increase the temperature setting 1 or 2 degrees.

IMPORTANT

Food placed within 1 in. in front of the air ports may cause food to freeze.

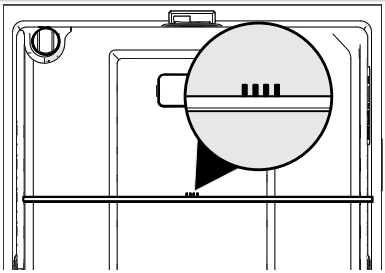

NOTE

Unit should stabilize temperatures within 24 hours of installation.

Alarms

High Temperature

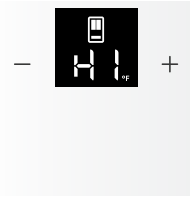

If the temperature increases, the **HIGH TEMP** alarm will sound every 10 seconds until you press any key to mute it. The display will blink **HI** in the corresponding compartment until the temperature reaches an acceptable level.

Door Alarm

When and door is left open for 5 minutes, an alarm will sound. The alarm is turned off by closing the door.

Sabbath Mode

The Sabbath Mode is a feature that disables portions of the refrigerator and its controls in accordance with observance of the weekly Sabbath and religious holidays within the Orthodox Jewish community.

In the Sabbath Mode, the High Temp alarm is active for health reasons. For example, if the door is left ajar the High Temp alarm is activated. The refrigerator will function normally once the door is closed, without any violation of the Sabbath/Holidays. The High Temp alarm is permitted when cabinet temperature is outside the safe zone for 20 minutes. The alarm silences itself after 10 minutes while the High Temp icon stays lit until the Sabbath mode is exited.

To activate Sabbath Mode, press and hold **—** and **Reset Air Filter** simultaneously for 5 seconds. **Sb** will display, and no audible sounds will occur until you exit Sabbath Mode.

To exit Sabbath Mode, press and hold **—** and **Reset Air Filter** simultaneously for 5 seconds. An audible tone will sound, and the refrigerator will go back to the state it was in prior to activating Sabbath Mode.

For further assistance, guidelines for proper usage and a complete list of models with the Sabbath feature, please visit the web at **star-k.org**.

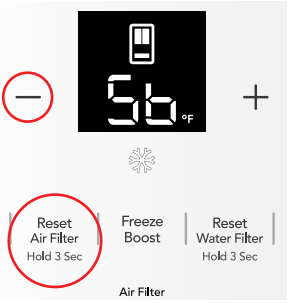

Sabbath Mode activated (placement varies by model)

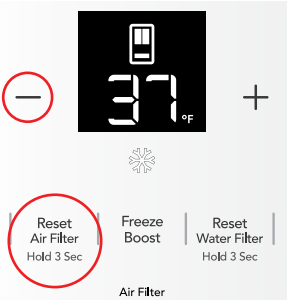

Sabbath Mode deactivated (placement varies by model)

NOTE

While in Sabbath Mode, neither the lights nor the appliance control display will work until Sabbath Mode is deactivated.

The refrigerator stays in Sabbath Mode after power failure recovery. Deactivated it with the buttons on the appliance control display.

NOTE

Although the Sabbath Mode has been initiated, the ice maker will complete the cycle it had already started. The ice cube compartment will remain cold and new ice cubes can be made with standard trays.

IMPORTANT

On occasion, unusually small ice cubes may be noticed in the bucket. This could occur in normal operation of the ice maker. If happening frequently, it may be an indication of low water pressure or the water filter needs to be replaced. As the water filter nears the end of its useful life and becomes clogged with particles, less water is delivered to the ice maker during each cycle. Remember, if it's been six months or longer since last changing the water filter, replace it with a new one. Poor quality household water may require the filter to be changed more frequently.

CAUTION

If the water supply to the refrigerator is softened, be sure the softener is properly maintained. Chemicals from a water softener can damage the ice maker.

Ice maker tips

- If refrigerator is not connected to a water supply or the water supply is turned off, turn off the ice maker as described in the previous section.
- The following sounds are normal when the ice maker is operating:
  - Motor running
  - Ice dropping into ice bin
  - Water valve opening or closing
  - Running water
- If a large quantity of ice is needed at one time, it is best to get cubes directly from the ice bin.
- Ice cubes stored too long may develop an odd flavor. Empty the ice bin as explained in **Cleaning the ice maker**.
- It is normal to have a small quantity of little pieces along with the whole cubes.
- It is normal for ice to fill to the top of the ice bin.

Cleaning the ice maker

Clean the ice maker and ice bin at regular intervals, especially prior to vacation or moving.

1. Turn off the ice maker.
2. Remove the ice bin by lifting upward and pulling straight out.
3. Empty and carefully clean the ice bin with mild detergent. Do not use harsh or abrasive cleaners. Do not place in dishwasher. Rinse with clear water.
4. Allow the ice bin to dry completely before replacing in the freezer.
5. Replace the ice bin. Turn the ice maker on.

Remove and empty the ice bin if:

An extended power failure (one hour or longer) causes ice cubes in the ice bin to melt and refreeze together after power is restored.

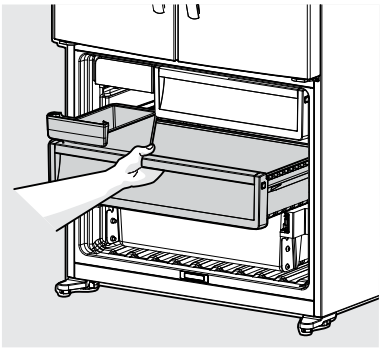

Removing Ice Bin

Remove the ice bin by (1) lifting upward and (2) pulling straight out, then shake to loosen the cubes or clean as explained above.

CAUTION

NEVER use an ice pick or similar sharp instrument to break up the ice. This could damage the ice bin.

To loosen stuck ice, use warm water. Before replacing the ice bin, make sure it is completely dry.

CAUTION

To avoid personal injury or property damage, handle tempered glass shelves carefully. Shelves may break suddenly if nicked, scratched, or exposed to sudden temperature change. Allow the glass shelves to stabilize to room temperature before cleaning. Do not wash in dishwasher.

Shelf positions can easily be adjusted in the fresh food compartments as needed. The shelves have mounting brackets that attach to slotted supports at the rear of each compartment.

Change the Position of a Shelf

1. Remove all food from shelf.
2. Lift the front edge up and pull the shelf out.
3. Replace by inserting the mounting bracket hooks into the desired support slots.
4. Lower the shelf and lock into position.

CrispSeal Drawer

The refrigerator includes a crisper designed for storing fruits, vegetables, and other fresh produce.

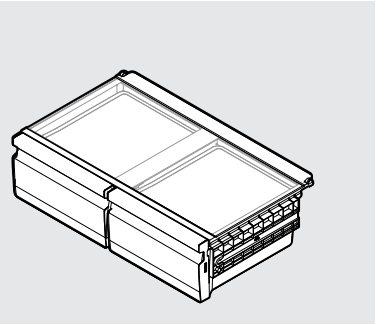

To remove the CrispSeal drawer for cleaning:

1. Pull the drawer out until it stops.
2. Lift the front slightly and remove the drawer.

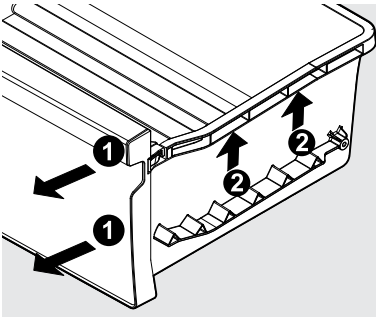

Removing CrispSeal Drawer

Doors

Storage bins

The doors to the fresh food compartment use a system of modular storage bins. All of these bins are removable for easy cleaning. Adjust bins as needed.

Door bins are ideal for storing jars, bottles, cans, and large drink containers. They also enable quick selection of frequently used items.

Adjustable door bins

Adjustable door bins can be moved to suit individual needs.

To move door bin side-to-side:

1. Tilt bin up so the back of the bin is off the door but the hook is still engaged.
2. Slide bin along rail to desired position.
3. Lower bin back into place.

To move the door bin up or down:

1. Lift bin up disengaging the hook.
2. Move bin to desired rail location.
3. Push bin hook into rail engaging the hook.

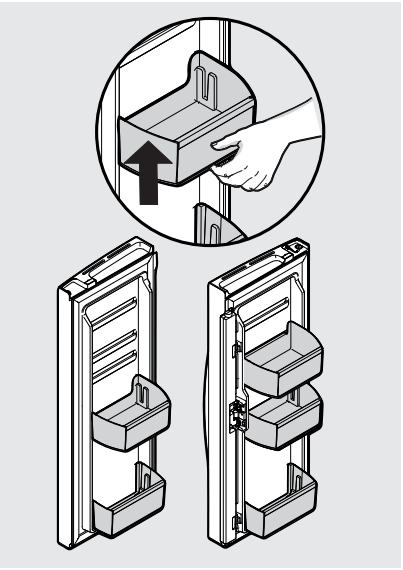

Adjustable Door Bins

Freezer Features (vary by model)

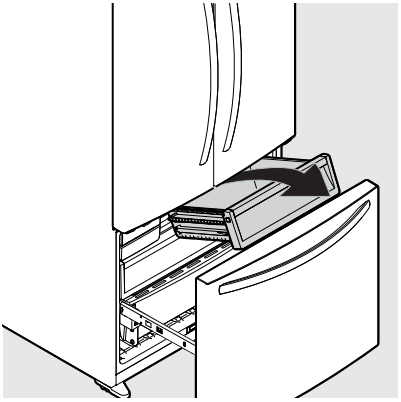

Freezer Drawer

To remove upper the freezer drawer:

1. Open freezer compartment completely.
2. Lift up and out to remove upper freezer drawer.

Reverse the steps to reinstall drawer.

IMPORTANT

There are wheels on the bottom of the drawer. Make sure all wheels are aligned on their respective tracks for proper function. If drawer is not aligned properly, it will cause problems with the door operation.

NOTE

If basket is not resting on stabilizer bar retainer clips, the drawer will not close properly.

To remove the freezer basket:

1. Open freezer compartment completely.
2. Lift the basket up and remove.

Reverse the steps to reinstall freezer basket.

Ideas for storing foods

Fresh food storage

- Keep the fresh food compartment between 34°F and 44°F with an optimum temperature of 37°F.
- Avoid overcrowding the refrigerator shelves, which reduces air circulation and causes uneven cooling.
- Avoid placing food in front of air ports. (See **CONTROLS AND SETTINGS** for illustration.)

Fruits and vegetables

- Store fruits and vegetables in crisper drawers, where trapped moisture helps preserve food quality for longer time periods.
- Do not wash items until ready to use. Remove excess water before placing inside unit.
- Wrap any items that have strong odors or high moisture content.

Meat

Wrap raw meat and poultry separately and securely to prevent leaks and contamination of other foods or surfaces.

Frozen food storage

- Keep the freezer compartment at 0°F or lower.
- A freezer operates most efficiently when it is at least ⅔ full.

Packaging foods for freezing

- To minimize food dehydration and quality deterioration, use aluminum foil, freezer wrap, freezer bags, or airtight containers. Force as much air out of the packages as possible and seal them tightly. Trapped air can cause food to dry out, change color, and develop an off-flavor (freezer burn).
- Wrap fresh meats and poultry with suitable freezer wrap prior to freezing.
- Do not refreeze meat that has completely thawed.

Loading the freezer

- Prior to grocery shopping, we recommend you activate **Freeze Boost** to freeze your food faster It will remain active for up to 24 hours
- Activating **Freeze Boost** will help the freezer more efficiently maintain the selected temperature after placing new purchases with pre-existing frozen foods.
- Avoid adding too much warm food to the freezer at one time. This overloads the freezer, slows the rate of freezing, and can raise the temperature of frozen foods.
- Leave a space between packages, so cold air can circulate freely, allowing food to freeze as quickly as possible.

Ideas for saving energy

Installation

- Locate the refrigerator in the coolest part of the room, out of direct sunlight, and away from heating ducts or registers.
- Do not place the refrigerator next to heat-producing appliances such as a range, oven, or dishwasher. If this is not possible, a section of cabinetry or an added layer of insulation between the two appliances will help the refrigerator operate more efficiently.
- Level the refrigerator so that the doors close tightly.

Temperature settings

Refer to the **CONTROLS AND SETTINGS** for procedures on temperature settings.

Food storage

- Avoid overcrowding the refrigerator or blocking cold air vents. Doing so causes the refrigerator to run longer and use more energy.
- Cover foods and wipe containers dry before placing them in the refrigerator. This cuts down on moisture build-up inside the unit.
- Organize the refrigerator to reduce door openings. Remove as many items as needed at one time and close the door as soon as possible.
- Do not place a hot container directly on a cold shelf. Remember, such an extreme temperature change may damage the glass.

Understanding the sounds coming from the refrigerator

High-efficiency refrigerators may introduce *unfamiliar sounds*. These sounds normally indicate the refrigerator is operating correctly. Some surfaces on floors, walls, and kitchen cabinets may make these sounds more noticeable.

The following is a list of major components in the refrigerator and the sounds they can cause. ✶**Features vary by model.**

A **Evaporator** Refrigerant through the evaporator may create a *boiling or gurgling* sound.

B **Evaporator fan** Sounds of *air being forced* through the refrigerator by the evaporator fan may be heard.

C **Defrost heaters** During defrost cycles, water dripping onto the defrost heaters may cause a *hissing or sizzling* sound. After defrosting, a popping sound may occur.

D ✶**Automatic ice maker** When ice has been produced, sounds of *ice cubes falling* into the ice bin may be heard. The ice maker fan, water valve activation, and refrigerant gas fluid may create sounds from its operation.

E **Electronic control & automatic defrost control** These parts can produce a *snapping or clicking* sound when turning the cooling system on and off.

F **Compressor** Modern, high-efficiency compressors run much faster than older models. The compressor may have a *high-pitched hum or pulsating* sound.

G ✶**Water valves** Make a *buzzing* sound each time they open to fill the ice maker.

H **Drain pan** (not removable) Sounds of *water dripping* into the drain pan during the defrost cycle may be heard.

I **Condenser** May create minimal sounds from *forced air*.

J **Motorized damper** May produce a *light humming* during operation.

NOTE

Energy efficient foam in the refrigerator is not a sound insulator.

NOTE

During automatic defrost cycle, a red glow in the back wall vents of the freezer compartment is normal.

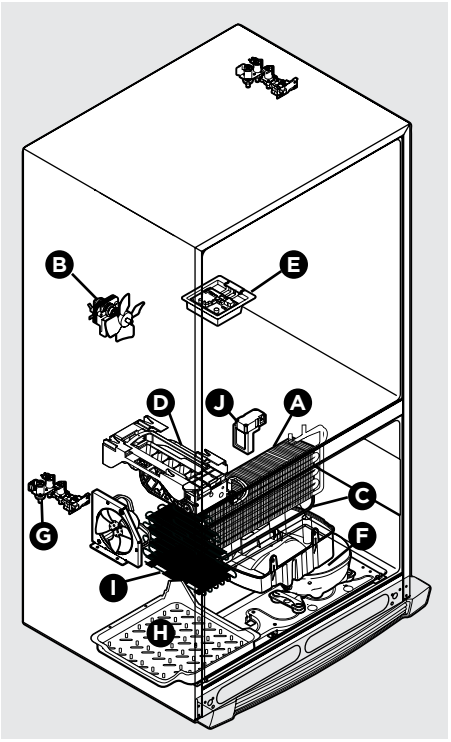

22 FILTER REPLACEMENT

PureSource Ultra II™ Water Filter
(some models not applicable)

Ordering your replacement water filter

If you have not used your refrigerator for a period of time (during moving for example), change the filter before reinstalling the refrigerator. Order replacement filters online at Frigidaire.com, by calling 1 (800) 374-4432 or through the dealer from which the refrigerator was purchased. We recommend replacing filters at least once every 6 months.

Here is the product number to request when ordering:

PureSource Ultra II™ Water Filter
EPTWFU01

NOTE

When you order your replacement filter, please reorder the same filter type currently in your refrigerator.

*Find the Performance Data Sheet located in the **Guides and Manuals** section for your specific water filter on Frigidaire.com.

More about the advanced water filter

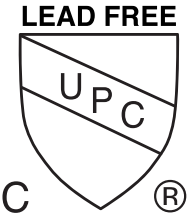

Certified by IAPMO R&T against NSF/ANSI Standards 42, 53, 401, and CSA B483.1 in **PureSource Ultra II** systems for reduction of the claims on the Performance Data Sheet*.

Do not use with water that is microbiologically unsafe or of unknown quality without adequate disinfection before or after the system. Systems certified for cyst reduction may be used on disinfected waters that may contain filterable cysts.

Test & certification results:

- Rated Capacity - 125 gal/473 L for **PureSource Ultra II** ice and water filter
- Rated service flow - .65 gal/min
- Operating Temp: Min. 33°F, Max. 100°F
- Maximum Rated Pressure - 100 lbs/in.²
- Recommended Minimum Operating Pressure: 30 lbs/in²

Replacing your water filter

The refrigerator is equipped with a water filtering system. The water filtering system filters water used to produce ice. The water filter is located at the top left side of the fresh food compartment.

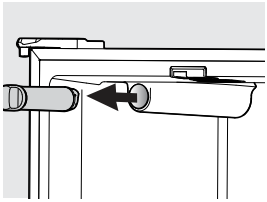

Change the water filter every 6 months to ensure the highest possible water quality. **Replace Water Filter** on the display indicates when to replace the filter after a standard amount of water (125 gallons/473 liters for **PureSource Ultra II**) has flowed through the system.

It is not necessary to turn the water supply off to change the filter. Be ready to wipe up any small amounts of water released during the filter replacement. (Instructional video of procedure can be found on Frigidaire.com.)

1. Turn off **Ice Maker** on the appliance control display.
2. Remove the old filter by rotating it counterclockwise (to the left) 90 degrees to release it.
3. Slide the old filter cartridge straight out of the housing and discard it.
4. Unpackage the new filter cartridge. Slide it into the filter housing as far as it will go with the grip end horizontal.
5. Push lightly inward on the filter while rotating it clockwise (to the right). The filter will then pull itself inward as it is rotated. Rotate the filter 90 degrees until it stops and the grip end is vertical. A very light click may be heard as the filter locks into place.
6. Press and hold the **Reset Water Filter** button on the appliance control display for 3 seconds. When the indicator is no longer illuminated, the water filter status has been reset.
7. Turn on **Ice Maker** on the appliance control display.
8. In order for the ice maker to work properly, clear air from the water filter tubing by filling the ice bucket completely twice. Discard the ice produced.

PureAir Ultra II™ Air Filter
(some models not included)

To ensure optimal filtering of refrigerator odors, change the air filter every 6 months. (**Replace Air Filter** on the appliance control display indicates replacing the filter after 6 months).

Ordering your replacement air filter

To order replacement filters, please visit our online store at Frigidaire.com, by calling toll-free at 1 (800) 372-4432, or by visiting the dealer where you purchased your unit. We recommend replacing filters at least once every 6 months.

Here is the product number to request when ordering:

PureAir Ultra II™ Air Filter PAULTRA2

Replacing your air filter

The air filter is located in the top center of the fresh food compartment.

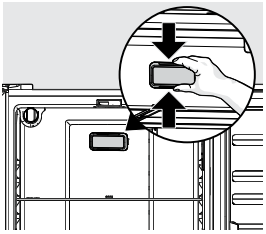

1. Remove the air filter cover by squeezing the top and bottom of the cover together and removing from liner.
2. Remove the old filter and discard it.
3. Unpack the new filter and snap it into the filter cover. The open face (carbon media) of the filter should be installed facing outward in the cover.
4. Replace the air filter cover by squeezing the sides and snapping it back into place.
5. Press and hold the **Reset Air Filter** button on the Display for 3 seconds. When the indicator turns off, the status has been reset.

24 CARE AND CLEANING

Care & Cleaning Tips

Keeping the refrigerator clean maintains its appearance and prevents odor build-up. Wipe up any spills immediately and clean the freezer and fresh food compartments at least twice a year.

NOTE

Do not use abrasive cleaners such as window sprays, scouring cleansers, flammable fluids, cleaning waxes, concentrated detergents, bleaches, or cleansers containing petroleum products on plastic parts, interior doors, gaskets, or cabinet liners. Do not use scouring pads or other abrasive cleaning materials.

- Never use metallic scouring pads, brushes, abrasive cleaners, or strong alkaline solutions on any surface.
- Never use CHLORIDE or cleaners with bleach to clean stainless steel.
- Do not wash any removable parts in a dishwasher.

NOTE

When setting temperature controls to turn off cooling, power to lights and other electrical components will continue until the power cord is unplugged from the wall outlet.

- Always unplug the electrical power cord from the wall outlet before cleaning.
- Remove adhesive labels by hand. Do not use razor blades or other sharp instruments which can scratch the appliance surface.
- Do not remove the serial plate. Removal of the serial plate voids the warranty.
- Before moving refrigerator, raise the anti-tip brackets so the rollers will work correctly. This will prevent the floor from being damaged.

Refer to the guide on the next page for details on caring and cleaning specific areas of refrigerator.

CAUTION

- Pull the refrigerator straight out to move it. Shifting it from side to side may damage flooring. Be careful not to move the refrigerator beyond the plumbing connections.
- Damp objects stick to cold metal surfaces. Do not touch refrigerated surfaces with wet or damp hands.

IMPORTANT

When storing or moving refrigerator in freezing temperatures, be sure to completely drain the water supply system. Failure to do so could result in water leaks when the refrigerator is put back into service. Contact a service representative to perform this operation.

Vacation and moving tips (vary by model)

Occasion	Tips
Short Vacations	• Leave the refrigerator operating during vacations of 3 weeks or less. • Use all perishable items from refrigerator compartment. • Turn the automatic ice maker off and empty the ice bucket, even if only away a few days.
Long Vacations	• Remove all food and ice if leaving for 1 month or more. • Turn the cooling system off (see **CONTROLS AND SETTINGS** for location of On/Off button) and disconnect power cord. • Turn the water supply valve to the closed position. • Clean the interior thoroughly. • Leave both doors open to prevent odors and mold build-up. Block the doors open if necessary.
Moving	• Unplug the unit. • Remove all food and ice. • We reommend If using a handcart, load from the side. • Adjust rollers all the way up to protect them during sliding or moving. • Pad the cabinet to avoid scratching the surface.

Care & Cleaning Tips		
Part	**What To Use**	**Tips and Precautions**
Interior & Door Liners	• Soap and water • Baking soda and water	Use two tablespoons of baking soda in one quart of warm water. **Be sure to wring excess water out of sponge or cloth before cleaning around controls, light bulb or any electrical part.**
Door Gaskets	• Soap and water	Wipe gaskets with a clean soft cloth.
Drawers & Bins	• Soap and water	Use a soft cloth to clean drawer runners and tracks.
Glass Shelves	• Soap and water • Glass cleaner • Mild liquid sprays	Allow glass to warm to room temperature before immersing in warm water.
Exterior & Handles	• Soap and water • Non Abrasive Glass Cleaner	Do not use commercial household cleaners containing ammonia, bleach or alcohol to clean handles. Use a soft cloth to clean smooth handles or exterior. **DO NOT use a dry cloth to clean smooth doors.**

26 TROUBLESHOOTING

Let us help you troubleshoot your concern! This section will help you with common issues. If you need us, visit our website, chat with an agent, or call us. We may be able to help you avoid a service visit. If you do need service, we can get that started for you!

1-800-374-4432 (United States)
Frigidaire.com

1-800-265-8352 (Canada)
Frigidaire.ca

Concern	Potential Cause	Common Solution
Automatic Ice Maker (some models)		
Ice maker is not making any ice.	• Ice maker is turned off.	• Turn on ice maker on the appliance control display.
	• Refrigerator is not connected to water line or water valve is not open.	• Connect the unit to the household water supply and ensure the water valve is open.
	• The water supply line is kinked.	• Ensure that the supply line does not kink when the refrigerator is pushed into place against the wall.
	• The water filter is not seated properly.	• Remove and reinstall the water filter. Be sure to seat it fully into the locked position.
Ice maker is not making enough ice.	• Ice maker is producing less ice than expected.	• The ice maker will produce approximately 2 to 2.5 pounds of ice every 24 hours depending on usage conditions.
	• The water supply line is kinked.	• Ensure that the supply line does not kink when the refrigerator is pushed into place against the wall.
	• Water pressure is extremely low. Cut-off and cut-on pressures are too low (well systems only).	• Have someone turn up the cut-off and cut-on pressure on the water pump system (well systems only).
	• Reverse osmosis system is in regenerative phase.	• It is normal for a reverse osmosis system to be below 20 psi during the regenerative phase.
Ice cubes are freezing together.	• Ice cubes are not being used frequently enough or interruption of power for prolonged time.	• Remove ice container and discard ice. The ice maker will produce fresh supply. Ice should be used at least twice weekly to keep the cubes separated.
	• Ice cubes are hollow (shells of ice with water inside). The hollow cubes break open in the bin and leak their water onto existing ice, which causes it to freeze together.	• This generally occurs when the ice maker does not get enough water. This is usually the result of a clogged water filter or restricted water supply. Replace the water filter and if the condition still occurs, check to see if the water valve is not turned on all the way or if there is a kinked water supply line.

Concern	Potential Cause	Common Solution
Opening/Closing Of Doors/Drawers		
Door(s) will not close.	• Door was closed too hard, causing other door to open slightly.	• Close both doors gently.
	• Refrigerator is not level. It rocks on the floor when moved slightly.	• Ensure floor is level and solid, and can adequately support the refrigerator. Contact a carpenter to correct a sagging or sloping floor.
	• Refrigerator is touching a wall or cabinet.	• Ensure floor is level and solid, and can adequately support the refrigerator. Contact a carpenter to correct a sagging or sloping floor.
	• Food/packaging is obstructing the door from closing.	• Make sure there is no food/ packaging blocking the doorway.
	• Flipper mullion on left fresh food door is not in the correct position.	• Ensure the flipper mullion is in the correct position to allow the door to close. (See **Flipper Mullion** in **INSTALLATION**.)
Drawers are difficult to move.	• Food is touching shelf on top of drawer.	• Remove top layer of items in drawer.
	• Track that drawers slide on is dirty.	• Ensure drawer is properly installed on track.
		• Clean drawer, rollers, and track. See **CARE AND CLEANING**.
Running of Refrigerator		
Compressor does not run.	• Refrigerator is in defrost cycle.	• This is normal for a fully automatic defrost refrigerator. The defrost cycle occurs periodically, lasting about 30 minutes.
	• Plug at electrical outlet is disconnected.	• Ensure plug is tightly pushed into outlet.
	• House fuse blown or tripped circuit breaker.	• Check/replace fuse with a 15 amp time-delay fuse. Reset circuit breaker.
	• Power outage.	• Check house lights. Call local electric company.
Refrigerator seems to run too much or too long.	• The variable speed compressor is designed to run 100% of the time except during the defrost cycle. At times it will run faster, such as after a defrost cycle.	• It is normal for the compressor to run continuously except during defrost mode.
Digital Temperature Setting Display		
Digital temperature displays an error.	• Electronic control system has detected a performance problem.	• Contact Electrolux Customer Care for assistance with any errors or codes flashing in the display by calling 1-800-374-4432.

Concern	Potential Cause	Common Solution
Water/Moisture/Frost Inside Refrigerator		
Moisture collects on inside of refrigerator walls.	• Weather is hot and humid. • Flipper mullion	• The rate of frost buildup and internal sweating increases. • Adjust flipper mullion. (See **Flipper Mullion** in **INSTALLATION**.)
Water collects on bottom side of drawer cover.	• Vegetables contain and give off moisture.	• It is not unusual to have moisture on the bottom side of the cover. • Both crispers contain an automatic humidity control, which should adjust automatically to the varying levels of moisture inside the drawer without creating additional condensation or drying out the air inside the crisper drawer, works with various types of produce. If excess moisture is noticed, check to verify humidity membrane is not damaged and replace as necessary.
Water collects in bottom of drawer.	• Washed vegetables and fruit drain while in the drawer.	• Dry items before putting them in the drawer. Water collecting in bottom of drawer is normal.
Water/Moisture/Frost Outside Refrigerator		
Moisture collects on outside of refrigerator or between doors.	• Weather is humid.	• This is normal in humid weather. When humidity is lower, the moisture should disappear.
Food/Drinks in Fresh Food Compartment		
Food is freezing.	• Temperature setting is too low. • Temperature sensor is covered by food (right side of fresh food area). • Food is covering the air ports.	• Move the setting to a higher degree. • Allow space for air flow to the sensor. • Allow space between the air ports and the food.

Your appliance is covered by a one year limited warranty. For one year from your date of delivery, Electrolux will pay all costs for repairing or replacing any parts of this appliance that prove to be defective in materials or workmanship when such appliance is installed, used and maintained in accordance with the provided instructions.

Exclusions

This warranty does not cover the following:

1. Products with original serial numbers that have been removed, altered or cannot be readily determined.
2. Product that has been transferred from its original owner to another party or removed outside the USA or Canada.
3. Rust on the interior or exterior of the unit.
4. Products purchased “as-is” are not covered by this warranty.
5. Food loss due to any refrigerator or freezer failures.
6. Products used in a commercial setting.
7. Service calls which do not involve malfunction or defects in materials or workmanship, or for appliances not in ordinary household use or used other than in accordance with the provided instructions.
8. Service calls to correct the installation of your appliance or to instruct you how to use your appliance.
9. Expenses for making the appliance accessible for servicing, such as removal of trim, cupboards, shelves, etc., which are not a part of the appliance when it is shipped from the factory.
10. Service calls to repair or replace appliance light bulbs, air filters, water filters, other consumables, or knobs, handles, or other cosmetic parts.
11. Surcharges including, but not limited to, any after hour, weekend, or holiday service calls, tolls, ferry trip charges, or mileage expense for service calls to remote areas, including the state of Alaska.
12. Damages to the finish of appliance or home incurred during installation, including but not limited to floors, cabinets, walls, etc.
13. Damages caused by: services performed by unauthorized service companies; use of parts other than genuine Electrolux parts or parts obtained from persons other than authorized service companies; or external causes such as abuse, misuse, inadequate power supply, accidents, fires, or acts of God.

DISCLAIMER OF IMPLIED WARRANTIES; LIMITATION OF REMEDIES

CUSTOMER’S SOLE AND EXCLUSIVE REMEDY UNDER THIS LIMITED WARRANTY SHALL BE PRODUCT REPAIR OR REPLACEMENT AS PROVIDED HEREIN. CLAIMS BASED ON IMPLIED WARRANTIES, INCLUDING WARRANTIES OF MERCHANTABILITY OR FITNESS FOR A PARTICULAR PURPOSE, ARE LIMITED TO ONE YEAR OR THE SHORTEST PERIOD ALLOWED BY LAW, BUT NOT LESS THAN ONE YEAR. ELECTROLUX SHALL NOT BE LIABLE FOR CONSEQUENTIAL OR INCIDENTAL DAMAGES SUCH AS PROPERTY DAMAGE AND INCIDENTAL EXPENSES RESULTING FROM ANY BREACH OF THIS WRITTEN LIMITED WARRANTY OR ANY IMPLIED WARRANTY. SOME STATES AND PROVINCES DO NOT ALLOW THE EXCLUSION OR LIMITATION OF INCIDENTAL OR CONSEQUENTIAL DAMAGES, OR LIMITATIONS ON THE DURATION OF IMPLIED WARRANTIES, SO THESE LIMITATIONS OR EXCLUSIONS MAY NOT APPLY TO YOU. THIS WRITTEN WARRANTY GIVES YOU SPECIFIC LEGAL RIGHTS. YOU MAY ALSO HAVE OTHER RIGHTS THAT VARY FROM STATE TO STATE.

If You Need Service

Keep your receipt, delivery slip, or some other appropriate payment record to establish the warranty period should service be required. If service is performed, it is in your best interest to obtain and keep all receipts. Service under this warranty must be obtained by contacting Electrolux at the addresses or phone numbers below.

This warranty only applies in the USA and Canada. In the USA, your appliance is warranted by Electrolux Major Appliances North America, a division of Electrolux Home Products, Inc. In Canada, your appliance is warranted by Electrolux Canada Corp. Electrolux authorizes no person to change or add to any obligations under this warranty. Obligations for service and parts under this warranty must be performed by Electrolux or an authorized service company. Product features or specifications as described or illustrated are subject to change without notice.

USA
1-800-374-4432
Frigidaire
10200 David Taylor Drive
Charlotte, NC 28262

Electrolux

Canada
1.800.265.8352
Electrolux Canada Corp.
5855 Terry Fox Way
Mississauga, Ontario, Canada
L5V 3E4

FRIGIDAIRE

welcome **home**

Our home is your home. Visit us if you need help with any of these things:

 owner support

 accessories

 service

 registration

(See your registration card for more information.)

Frigidaire.com
1-800-374-4432

Frigidaire.ca
1-800-265-8352