Owner's Manual

For N61X models: 6 cu.ft., 2-way, R.V. refrigerators.
For N81X models: 8 cu.ft., 2-way, R.V. refrigerators.

The letter "X", in the model number above, stands for a letter or a numeral which means a refrigerator option.

WARNING: Improper installation, adjustment, alteration, service or maintenance can cause injury or property damage. Refer to this manual. For assistance or additional information, contact a qualified installer, service agency, or the gas supplier.

FOR YOUR SAFETY

Do not store or use gasoline or other flammable vapors and liquid in the vicinity of this or any other appliance.

FOR YOUR SAFETY

If you smell gas:

1. **Open windows**
2. **Don't touch electrical switches.**
3. **Extinguish any open flame.**
4. **Immediately call your gas supplier.**

English

French

NORCOLD, Inc.
P.O. Box 4248
Sidney, OH 45365-4248

Norcold Cutomer Service Dept.
Telephone: 800-543-1219
Fax: 937-497-3183
Web Site: www.norcold.com

Part No. 623013F (7-04)

Table of Contents

Gas Absorption 3 Year Limited Warranty Policy 2
Gas Absorption Warranty Information 3
Gas Absorption Warranty Questions 3
Safety Awareness 4
Safety Instructions 4
About Your Refrigerator 4
- Storage volume 4
- Leveling 4
- Operation during travel 4
- Food compartment 4
- Freezer compartment 5
- Crisper(s) 5
- Door bins 5
- Adjustable shelves 5
- Door handles 5
- Interior light 5
- Moisture reduction heater 5
- Temperature control system 5
- Backup operating system 5

Operating the Refrigerator Controls 6
- Control panel 6
- Automatic mode operation 6
- Removing air from the propane gas supply lines 6
- Set the controls to automatic mode operation 7
- Set the controls to manual mode operation 7
- Cooling unit sensing 7

Effect of High Altitude on Propane Gas Operation 7
Refrigerator Care Checklist 8
Defrosting 8
Cleaning 8
- Drip tray 9

Door Sealing 9
Refrigerator Maintenance Checklist 9
Refrigerator Storage 9
Refrigerator Maintenance 10
- Gas flame appearance 10
- Remove and clean the burner orifice 10

Remove the Refrigerator 10
Reinstall the Refrigerator 11
Wiring Pictorial 11
Wiring Diagram 11
Display Codes 11
Fault Codes 12
Replacement Parts 12

NORCOLD - Gas Absorption 3 Year Limited Warranty Policy

Norcold • P.O. Box 4248 • Sidney, OH • USA • 45365-4248

Provided it is properly installed, properly maintained and placed under normal service and use, Norcold, Inc. warrants its refrigeration equipment to be free from defects in material and workmanship for three years with respect to the equipment's component parts, and for two years with respect to the labor to repair or replace such parts, commencing from the original date of purchase.

Limitations of warranty

1. This Warranty applies only to Norcold gas absorption refrigerator operating equipment. This Warranty does not extend to glassware, electric light bulbs, and replaceable fuses.

2. This warranty does not apply to parts and assemblies that have been subjected to misuse, improper installation, improper or abnormal service, transit damage, recharging of the cooling system, accident, fire, improper repair, tampering or abuse.

3. Irrespective of the nature of the warranty protection offered or claimed, the period of warranty shall in no case extend beyond three years for component parts and two years for the labor to repair or replace such parts, commencing from the original date of purchase of the new equipment.

4. In order to obtain the remedy of repair and replacement, the refrigerator must be brought to any Norcold Service Center for warranty service. The end consumer is responsible for all expenses resulting from any remote service call if the refrigerator cannot be brought into the Norcold service center.

5. It is the responsibility of the end consumer to have maintenance performed upon the warranted equipment one time during the second year or before the beginning of the third year after original purchase. Such maintenance is required to maintain this warranty in effect and failure to perform such maintenance will void the remainder of the warranty. Required maintenance during the second year or before the third year after purchase is cleaning and checking of the following: **Burner, Flue, Spiral Baffle, Roof Cap Screen, and Control Board Sequence.**

LIMITATION OF REMEDY

1. THE RESPONSIBILITY OF NORCOLD UNDER THIS OR ANY WARRANTY IS LIMITED TO THE REPAIR OR REPLACEMENT (AT NORCOLD'S OPTION) OF THE DEFECTIVE PART OR ASSEMBLY.

2. **IN NO EVENT AND UNDER NO CIRCUMSTANCES SHALL NORCOLD BE RESPONSIBLE UNDER THIS LIMITED WARRANTY FOR ANY OTHER CHARGE WHATSOEVER, INCLUDING BUT NOT LIMITED TO CHARGES OR CLAIMS FOR LABOR, LOST BUSINESS, LOST TIME, LOST PROFITS, LOSS OF USE, OR ANY KIND OF INCIDENTAL OR CONSEQUENTIAL DAMAGES, HOWEVER DENOMINATED OR DESCRIBED. THE REMEDY UNDER THIS WARRANTY IS LIMITED TO REPLACEMENT OR REPAIR.**

3. **SOME STATES DO NOT ALLOW THE EXCLUSION OR LIMITATION OF INCIDENTAL OR CONSEQUENTIAL DAMAGES, SO THE ABOVE EXCLUSION MAY NOT APPLY TO YOU.**

DISCLAIMER OF OTHER WARRANTIES

THIS WARRANTY IS EXPRESSLY IN LIEU OF ALL OTHER WARRANTIES EITHER EXPRESSED OR IMPLIED. ALL OTHER WARRANTIES, EXPRESSED OR IMPLIED, INCLUDING ANY WARRANTY OF MERCHANTABILITY OR FITNESS FOR A PARTICULAR PURPOSE, ARE HEREBY DISCLAIMED AND EXCLUDED.

Legal rights

This warranty gives you specific legal rights, and you may have other legal rights, which vary from state to state.

Gas Absorption Warranty Information

Your refrigerator is made to provide the ultimate in cooling satisfaction and will serve you reliably in the years to come. Norcold refrigerators are the only RV refrigerators made in the United States and offer a standard limited three-year warranty. Norcold also offers an additional warranty coverage plan which extends the standard limited three-year warranty. To activate your three-year limited warranty and to receive an invitation to participate in the extended warranty plan, complete and mail the warranty registration supplied.

Help us to help you.

Write the model number and serial number below for future reference. These numbers are on the serial plate in the refrigerator. The serial plate is located in the fresh food compartment on the top right hand side. Use these numbers when receiving service or in any correspondence concerning your refrigerator.

Model number _____ Serial number _____

If a problem occurs with your refrigerator, contact any of the service centers throughout the United States and Canada. To find an authorized Norcold Service Center near you, please telephone the Norcold Customer Support Dept. at 800-543-1219 (option-1) or visit our web site at www.norcold.com.

Norcold is committed to providing products that are in harmony with the environment. Your Norcold refrigerator meets all environmental safety standards.

Gas Absorption Warranty Questions

About your warranty
This warranty coverage begins on the original date of purchase by the consumer purchaser and is the only warranty for the Norcold refrigerator. In no case will the *Limited Warranty* extend beyond two (2) years for labor and three (3) years for parts and freight. Norcold reserves the right to change design or specifications of a refrigerator without obligation to modify previously produced refrigerators. There are no other warranties, either expressed or implied.

What is coverd by this warranty?
- Defects in material and workmanship.
- Parts and labor for two (2) years
- Parts only for the third year ***if*** the required maintenance is performed.
- Freight (***ground service only***) for shipment of a replacement part and for return of the defective part.

What is not covered by this warranty?
- Shipping methods other than ground service.
- Defects in glassware, electric light bulbs, and replacement fuses.
- Adjustment of the burner electrode.
- Cleaning of the burner.
- Fees for mobile repair service.
- Mileage or travel expenses to obtain warranty service.
- Expenses for required maintenance as specified in the *Limited Warranty* and in the *Owner's Manual.*
- Incidental or consequential loss or damage including but not limited to charges or claims for labor (including labor when no parts are used for a repair), lost business, lost time, lost profits, lost food, and lost use.
- Replacement parts that are not manufactured or supplied by Norcold.
- Defect of a part or assembly when the defect originates from misuse, improper installation, improper or abnormal service, transit damage, recharging of the cooling system, accident, fire, improper repair, tampering, or abuse.

What will Norcold do?
For a refrigerator that is properly installed, maintained, and used as specified in the *Installation/Owner's Manuals*, Norcold responsibilities are:
- Limited to the repair and replacement of parts.
- To provide no charge parts and labor for two (2) years.
- To provide no charge parts ***only*** for year 3 ***if*** the required maintenance is performed.
- To provide freight (***ground service only***) for shipment of a replacement part and for return of a defective part for three (3) years.

What will the refrigerator owner do?
To obtain warranty service, the refrigerator owner responsibilities are:
- To use, service, and maintain the refrigerator as specified in the *Installation/Owner's Manuals*.
- To deliver the warranted product to an authorized Norcold Service Center for warranty repair.
- To show proof that the refrigerator is within warranty coverage.
- To have the required maintenance performed by an authorized Norcold Service Center one time during year 2 of the *Limited Warranty*.
- To pay to have the required maintenance performed.
- To mail paid receipt to Norcold showing required performed before expiration of year 2 of the *Limited Warranty*.
- To show proof of the required maintenance before requesting warranty service in year 3 of the *Limited Warranty*.

What rights do you have?
The warranty gives you specific legal rights. You may also have other rights which vary from state to state.

Safety Awareness

Read this manual carefully and understand the contents before you use the refrigerator.

Be aware of possible safety hazards when you see the safety alert symbol on the refrigerator and in this manual. A signal word follows the safety alert symbol and identifies the danger of the hazard. Carefully read the descriptions of these signal words to fully know their meanings. They are for your safety.

WARNING: This signal word means a hazard, which if ignored, can cause dangerous personal injury, death, or much property damage.

CAUTION: This signal word means a hazard, which if ignored, can cause small personal injury or much property damage.

Safety Instructions

WARNING:

- The storage of flammable materials behind or around the refrigerator creates a fire hazard. Do not use the area behind the refrigerator to store anything, especially flammable materials (gasoline, cleaning supplies, etc.)

- Do not remove the round ground prong from any of the AC power cords. Do not use a two prong adapter or an extension cord with any of the AC power cords.

- A circuit overload can result in an electrical fire if the wires and/or fuses are not the correct size. Use only the wire and fuse sizes as writtten in the “Installation Manual”.

- Incorrect installation, adjustment, change to, or maintenance of this refrigerator can cause personal injury, property damage, or both. Have service and maintenance work done by your dealer or by an Norcold authorized service center.

- Disconnect both the AC and DC power sources before doing any maintenance work on the refrigerator. All service work on this refrigerator must be done by a qualified service technician.

- Do not bypass or change the refrigerator’s electrical components or features.

- When you discard an appliance, remove all doors to prevent accidental entrapment and suffocation.

- Do not spray liquids near electrical outlets, connections, or the refrigerator components. Many liquids are electrically conductive and can cause a shock hazard, electrical shorts, and in some cases fire.

- The refrigerator cooling system is under pressure. Do not try to repair or to recharge a defective cooling system. The cooling system contains sodium chromate. The breathing of certain chromium compounds can cause cancer. The cooling system contents can cause severe skin and eye burns, and can ignite and burn with an intense flame. Do not bend, drop, weld, move, drill, puncture, or hit the cooling system.

- At regular intervals, make sure that the refrigerator flue the burner, the vent areas, and the ventilation air pathway between the vents are completely free from any flammable material or blockage. After a period of storage, it is especially important to check these areas for any flammable material or blockage caused by animals.

CAUTION:

- The rear of the refrigerator has sharp edges and corners. To prevent cuts or abrasions when working on the refrigerator, be careful and wear cut resistant gloves.

About Your Refrigerator

Storage Volume:

This refrigerator is made for storage of foods and frozen food and for making ice.

Total capacity	N61X models	N81X models
	6.3 cubic feet	7.5 cubic feet

Leveling:

CAUTION: The refrigerator is made to operate within 3° off level side-to-side and 6° off level front-to-back (as looking at the front of the refrigerator). Operating it at more than these limits can cause damage to the cooling system and create a risk of personal injury or property damage. Make sure the vehicle is level before you operate the refrigerator.

Operation during travel:

While the refrigerator should be level when the vehicle is stopped, performance during travel is not usually effected.

Food compartment:

Start up the refrigerator and let it cool for eight hours before loading with food. If the refrigerator does not start to cool down after about two hours, contact your dealer or a Norcold authorized service center.

For the best cooling performance:

- Let air move freely inside the entire food compartment.
- Do not cover the shelves with plastic, paper, etc.

To decrease the amount of ice that collects on the cooling fins:

- Cover all liquids and moist foods.
- Let all hot foods cool before putting them in the refrigerator.
- Do not open the door any longer than necessary.

Freezer compartment:

The freezer compartment is made to keep pre-frozen food frozen and not to quick freeze food. Keep pre-frozen foods in the freezer compartment.

NOTE: Do not put other items on the ice tray while the water is freezing. The water freezes more rapidly if the thermostat is at the COLDEST position.

Crisper(s):

The crisper(s) are located at the bottom of the fresh food compartment and supply a storage area to preserve fruit and vegetable freshness. Make sure that you always push the crispers fully in.

NOTE: Do not wash the crispers in a dishwasher. The crispers are not dishwasher safe.

Door bins:

You may put the door bins of the freezer and fresh food compartment in a location that best meets your needs. To remove the bins, lift them over the locator and pull them forward. To install the bins, push them onto the locator.

NOTE: Do not wash the door bins and bin slides in a dishwasher. The door bins and bin slides are not dishwasher safe.

Adjustable shelves:

The shelves in the freezer and the fresh food compartment are made so you can remove them or move them.

To remove or move the shelf of the freezer:

- Pull the shelf forward out of the slot.
- Push it fully into the slot that you wish.

To remove or move each shelf of the fresh food compartment:

- Remove the screw from the retainer of each shelf at the rear of the refrigerator.
- Pull each shelf forward out of the slot.
- Push each shelf fully into the slot that you wish.
- Attach the retainer with the screw.

Door handles:

During travel, the door latch prevents the door from opening. When closing each door, push the door toward the refrigerator until you hear a “click” sound.

To open each door, pull the handle away from the refrigerator.

During storage, the storage latch prevents the door from completely closing. Use it to prevent odors when the refrigerator is stored for an extended period of time.

To operate the storage latch (see Art00991), open each door about 1/2 inch and push the storage latch [1] into the cutout [2] of the strike plate. Do not use the storage latch as a travel latch because the doors will not be fully closed.

Interior light:

The interior light is at the top of the fresh food compartment. It comes on when the refrigerator is ON and the door is open. To replace the bulb:

1. Remove the DC power supply wires from the power board at the rear of the refrigerator.
2. To remove the cover [1] , push it toward the rear of the refrigerator (See Art00988).
3. Remove the light bulb [2] from the holder [3].

NOTE: Use only a GE#214-2 bulb as the replacement bulb. This bulb is available at most retail automotive parts centers.

4. Install the replacement bulb.
5. Install the cover.
6. Connect the DC power supply wires to the power board at the rear of the refrigerator.

Moisture reduction heater:

The refrigerator has a heater that prevents moisture from forming on the center divider between the doors of the freezer and the fresh food compartment. The heater operates only when the refrigerator is ON.

Temperature control system:

Although the refrigerator is not frost -free, it is made to limit frost on the cooling fins. At regular intervals, the temperature control system automatically melts most of the frost from the cooling fins. The water from the cooling fins drains into a collection cup that is attached to the back of the refrigerator. The heat of the cooling system evaporates the water from the collection cup.

Backup operating system:

This refrigerator has a backup operating system. The backup operating system allows the refigerator to continue to cool if the temperature sensor of the refrigerator should fail.

If this failure occurs:

- The refrigerator automatically changes to the backup operating system.
    - The ON light flashes a fault code. See the “Fault Codes” section of this manual.
    - The backup operating system can overfreeze or thaw the contents of the freezer and the fresh food compartment.
    - Make sure the temperatures of the freezer and the fresh food compartment are satisfactory.

    NOTE: If you open the door(s) too often, the temperatures inside the freezer and fresh food compartment do not become stable. Allow the refrigerator to operate for about one hour after each adjustment change before you examine the contents. The number “5” is the coldest temperature setting.

        - If the temperature is too warm, push the temperature switch to the right to raise the temperature setting by one number.
        - If the temperature is too cold, push the temperature switch to the left to lower the temperature setting by one number.

- Have the refrigerator serviced by your dealer or an Norcold authorized Service Center as soon as possible.

Operating the Refrigerator Controls

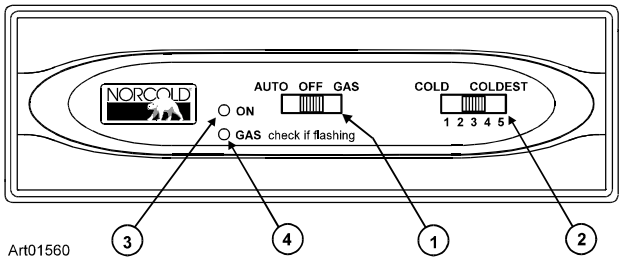

Art01560

Control panel:

The refrigerator control panel (see Art01560) is between the freezer compartment and the fresh food compartment. A 12 volt DC power supply is necessary for the control functions of the refrigerator to operate. The refrigerator receives DC power from the 12 volt system of the vehicle; either an auxiliary battery, a converter, or the vehicle engine battery.

The selector switch [1] starts and shuts down the refrigerator:

- Push the selector switch to the AUTO position to start the refrigerator in auto mode.
- Push the selector switch to the GAS position to start the refrigerator on propane gas.

The temperature switch [2] controls the temperature adjustment of the freezer and the fresh food compartment. The temperature adjustment that you select does not change if the mode of operation of the refrigerator changes.

- Push the temperature switch to the desired temperature setting.
- The number “5” is the coldest temperature setting.

Refer to the “Display Codes” section of this manual.

Automatic mode operation:

When the refrigerator is in AUTO mode, it automatically uses the most efficient energy source that is available for operation. During operation, if a more efficient energy source becomes available, the refrigerator controls change from the current energy source to the more efficient energy source as follows:

- The first choice is AC operation if 120 volts AC is available to the refrigerator.
- The second choice is propane gas operation if 120 volts AC is not available to the refrigerator.

Removing air from the propane gas supply lines:

For safety reasons, the burner is made to ignite on propane gas within a specified amount of time. When starting the refrigerator for the first time, after storage, or after replacing propane gas tank, the propane gas supply lines can have air in them. Due to the air in the gas supply lines, the refrigerator may not ignite on propane gas within the specified amount of time.

To remove the air from the propane gas supply lines:

- Make sure that all of the gas valves are open.
- Push the selector switch to the GAS position and the refrigerator will start a 30 second trial for ignition.
    - During the 30 second trial for ignition, the refrigerator controls open the gas safety valve and the igniter sparks.

- During the 30 second trial for ignition, both the ON and the GAS light show.

- If the ON light [3] and the GAS light [4] both show after 30 seconds, it means that the refrigerator is operating on propane gas.

  - At this time, all of the air is removed from the propane gas supply lines and you may select AUTO mode of operation if you wish.

- If the air in the propane gas supply lines prevents the burner from igniting on propane gas after 30 seconds the refrigerator controls close the gas safety valve and the igniter stops sparking.

  - Both the ON light and the GAS light flash about once every second.

  - Push the selector switch to the OFF position and then to the GAS position and the refrigerator will start a 30 second trial for ignition.

- Depending on how much air may be in the propane gas supply lines, you may need to repeat the 30 second trial for ignition two or three times.

- If the burner does not ignite on propane gas after two or three attempts, stop and consult your local dealer or an authorized Norcold Service Center.

Set the controls to automatic mode operation:

Push the selector switch to the AUTO position.

- If 120 volts AC is available to the refigerator, the ON light [3] shows.

  - This means that the refrigerator is operating on AC electric.

- If 120 volts AC is not available to the refigerator, the ON light and the GAS light both show.

  - This means that the refrigerator is operating on propane gas.

If the energy source is interrupted:

- The refrigerator shows a fault code.

- Refer to the “Fault Codes” section of this manual.

Set the controls to manual mode operation:

- Push the selector switch to the GAS position.

- When the ON light and the GAS light both show, this means that the refrigerator is operating on propane gas.

If the energy source is interrupted:

- The refrigerator shows a fault code.

- Refer to the “Fault Codes” section of this manual.

Cooling unit sensing:

The controls have the ability to sense the operation of the cooling unit. If the controls sense that the cooling unit has stopped cooling:

- The heat sources to the cooling unit are turned off and are locked out by the controls.

- The ON light flashes about five times every three seconds.

You can reset the controls and remove the fault code one time. To reset the controls, shut off and then start the refrigerator.

- To turn off the refrigerator, push the selector switch to the OFF position.

- To turn on the refrigerator, push the selector switch to the AUTO position.

If you reset the controls and the fault occurs again before the refrigerator completes a full cooling cycle:

- The heat sources to the cooling unit are turned off and are locked out.

- The ON light flashes about five times every three seconds.

- This time you can not reset the fault. Have the refrigerator serviced by your dealer or a Norcold authorized Service Center as soon as possible.

Effects of High Altitude on Propane Gas Operation

When you operate the refrigerator on propane gas at altitudes higher than 5500 feet above sea level:

- You may experience reduced cooling performance of the refrigerator.

- You may experience burner outages.

To avoid these possible problems, Norcold recommends that you operate the refrigerator on AC when at altitudes higher than 5500 feet above sea level.

Refrigerator Care Checklist

Your refrigerator will give you years of trouble free service if you do these simple checks every three to six months:

- Keep the food compartment and the freezer clean. See “Cleaning”.
- Defrost the refrigerator as necessary. See “Defrosting”.
- Make sure the door seals correctly. See “Door Sealing“.
- Be aware of any cooling changes that are not because of weather, loading, or gas control changes. If changes occur, contact your dealer or service center.
- Make sure the gas supply is propane gas only and not butane or a butane mixture.
- When in propane gas operation, examine the appearance of the flame. See “Gas Flame Appearance”.
- Make sure the air flow in the lower intake vent, through the refrigerator coils and condenser, and out the upper exhaust vent is not blocked or decreased.
- Make sure the area behind the refrigerator is clear. Do not use the area behind the refrigerator for storage of anything, especially gasoline and other flammable vapors and liquids.

Defrosting

The cooling fins of the refrigerator operate at below freezing temperature and will naturally form frost from humidity, which is always present in the air. The humidity inside the refrigerator increases:

- with higher outside temperature and humidity.
- with the storage of non-sealed fresh foods or warm foods.
- with the amount of time that the door(s) are open.
- with any air leakage into the refrigerator.

Although the refrigerator is not frost -free, it is made to limit frost on the cooling fins. At regular intervals, the temperature control system automatically melts most of the frost from the cooling fins. The water from the cooling fins drains into a collection cup that is attached to the back of the refrigerator. The heat of the cooling system evaporates the water from the collection cup.

It is normal for frost to collect inside the freezer. Excess frost decreases the cooling performance of the refrigerator. Defrost the refrigerator and freezer as necessary:

- Remove all food from the refrigerator.
- Turn the refrigerator OFF.

NOTE: Defrosting the refrigerator makes excess water inside the refrigerator.

- Remove the drain hose from the drip cup at the rear of the refrigerator.
- Put the drain hose into a half-gallon or larger container to capture water.
- Put dry towels (etc.) inside the refrigerator and freezer to absorb melted frost.

CAUTION: High temperatures can cause the inside surfaces of the refrigerator to warp or melt. Do not use pans of HOT water, a hair dryer, or any other high temperature devices to defrost the refrigerator. Do not use any hard or sharp objects to remove frost. Damage to the interior of the refrigerator can occur.

- To increase the speed of defrosting, put pans of WARM water in the refrigerator and freezer.
- Remove the wet towels (etc.) and dry the interior.
- Remove the drain hose from the large container and put the drain hose back into the drip cup.
- Remove the large container from the enclosure.
- Start up the refrigerator.
- Allow the refrigerator to cool down.
- Return all food to the refrigerator.

Cleaning

A good time to clean the refrigerator is just after you defrost it. Clean the inside of the refrigerator as often as necessary to avoid food odors:

- Remove all food from the refrigerator.

NOTE: Do not use abrasive cleaners, chemicals, or scouring pads because they can damage the interior of the refrigerator.

- Wash the interior with a mild cleaner or a solution of liquid dish detergent and warm water.
- Rinse with a solution of baking soda and clean water.
- Dry with clean cloth.
- Put all food in the refrigerator.

Drip tray:

To remove and clean the drip tray:

- Pull the self forward to remove from the refrigerator
- Make sure that the drip tray is empty of water.
- Pull the drip tray out of the drain hose.
- Pull the drip tray forward to remove from the slots in the refrigerator cabinet.
- Clean the drip tray.
- Push the drip tray back into the slots in the refrigerator cabinet.
- Push the drip tray back into the drain hose.
- Put the wire shelf back in the original position.

Door Sealing

Check the seal of the doors.

If either door does not seal correctly, excess frost will collect inside the refrigerator. Make sure the doors seal correctly (See Art00980):

- Close each door on a piece of paper that is about the size and thickness of a dollar bill.
- Gently pull the paper.
    - You should feel a slight drag between the gasket and the cabinet.
    - Do this on all four sides of the door.
    - If you do not feel a slight drag on the paper, the door does not seal correctly.
    - Have your dealer or an authorized Norcold Service Center correct the seal of the door.

Refrigerator Maintenance Checklist

Read and understand the following maintenance sections of this manual.

NOTE: Norcold is not responsible for installation, adjustment, alteration, service, or maintenance performed by anyone other than a qualified RV dealer or a Norcold authorized service center.

Have a qualified RV dealer or a Norcold authorized service center do these annual safety and maintenance checks:

- Examine the gas supply lines for leaks.
    - Replace or repair if needed.
- Make sure the propane gas pressure is 11 inches of water column.
    - Adjust if needed.
- Make sure the combustion seal is complete and intact.
    - Replace or repair it if needed.
- Make sure the burner and the burner orifice are clean.
    - Clean if needed.
- Make sure the electrode spark gap is 1/8 - 3/16 inch.
    - Adjust if needed.
- Make sure the AC voltage is 108 - 132 volts and the DC voltage is 10.5 - 15.4 volts.
- Make sure the thermocouple tip is clean and secure.
- Make sure the area at the rear of the refrigerator is free of any combustible materials, gasoline, and other flammable vapors and liquids.

Refrigerator Storage

Before the refrigerator is stored for an extended (seasonal) period of time:

- Defrost and clean the interior of the refrigerator.
- Close the doors with the storage latch.

If the refrigerator is stored for an extended period of time, before start up:

- Make sure there are no obstructions in the vents, the ventilation air pathway, the burner, the orifice, or the flue area.

Refrigerator Maintenance

Gas flame appearance:

While in GAS operation, examine the appearance of the gas flame:

- Turn the temperature switch to the COLDEST position.
- Open the lower intake vent.

CAUTION: The burner box cover can be hot. Wear gloves to avoid burns.

- Remove the burner box cover by removing the screw.
- Look at the gas flame [1] (See Art01605).
  - The flame should be:
    - a darker blue color on the inside of the flame and a lighter blue color on the outside of the flame.
    - a constant shape without flickering.
  - Contact your dealer or Norcold authorized service center if the flame is:
    - yellow
    - flickering or changing shape.
  - Make sure the flame does not touch the inside of the flue tube [2].
  - If the flame touches the inside of the flue tube, contact your dealer or Norcold authorized service center.
- Close the burner box door.

Remove and clean the burner orifice:

Your dealer or Norcold authorized service center must do this procedure.

Remove and clean the burner orifice (See Art00956):

- Close the valve at the propane gas tank(s).
- Push the selector switch to the OFF position to shut down the refrigerator.

CAUTION: The burner box cover can be hot. Wear gloves to avoid burns.

- Open the lower intake vent.
- Remove the drip cup by removing the screw.
- Remove the burner box cover by removing the screw.

WARNING: To avoid possible propane gas leaks, always use two wrenches to loosen and tighten the gas supply line connections.

- Remove the flare nut from the orifice assembly [1] (See Art00956).
- Remove the burner [2] from the orifice assembly.

WARNING: Do not try to remove the orifice [3] from the orifice adapter [4] when cleaning. Removal will damage the orifice and seal of the orifice and can cause a propane gas leak. Leaking propane gas can ignite or explode which can result in dangerous personal injury or death. Do not clean the orifice with a pin or other objects.

- Clean the orifice assembly with air pressure and alcohol only.
- Using a wrench, assemble the orifice assembly to the burner.
- Assemble the flare nut to the orifice assembly.
- Examine all of the connections for gas leaks.
- Clean the burner box.
- Assemble the burner box cover.
- Assemble the drip cup.

Remove the Refrigerator

Your dealer or Norcold authorized service center must do this procedure.

CAUTION: The rear of the refrigerator has sharp edges and corners. To prevent cuts or abrasions when working on the refrigerator, be careful and wear cut resistant gloves.

1. Close the valve at the propane gas tank(s).

WARNING: To avoid possible propane gas leaks, always use two wrenches to loosen and tighten the gas supply line connections.

2. Remove the black AC power cord and the white ice maker AC power cord (model N843-IM only) from the receptacle.
3. Remove the DC wiring from the refrigerator:
   - Put a mark on the DC wires so you can put them back in the correct location.

- Remove the DC fuse or remove the DC wiring from the battery or the converter.

- Remove the DC wires from the refrigerator.

4. Open the lower intake vent and remove the gas supply line from the bulkhead fitting of the refrigerator.

5. Remove the plastic plugs from the mounting flanges of the refrigerator.

6. Remove the screws from the mounting flange at the rear of the refrigerator.

7. Remove the screws from the upper and lower mounting flanges on the front of the refrigerator.

8. Remove the refrigerator from the opening.

Reinstall the Refrigerator

Your dealer or Norcold authorized service center must do this procedure.

WARNING: Make sure the combustion seal is not broken, is completely around the refrigerator mounting flanges, and is between the mounting flanges and the wall of the enclosure. If the combustion seal is not complete, exhaust fumes can be present in the living area of the vehicle. The breathing of exhaust fumes can cause dizziness, nausea, and in extreme cases, death.

1. Push the refrigerator completely into the enclosure.

2. Install the screws in the upper and then the lower mounting flanges on the front of the refrigerator.

3. Install the screws in the mounting flange at the rear of the refrigerator.

4. Put the plastic plugs into the mounting flanges of the refrigerator.

WARNING: To avoid possible propane gas leaks, always use two wrenches to loosen and tighten the gas supply line connections.

5. Attach the gas supply line to the bulkhead fitting of the refrigerator.

6. Open the valve at the propane gas tank(s).

WARNING: Do not allow the leak checking solution to touch the electrical components. Many liquids are electrically conductive and can cause electrical shorts and in some cases, fire.

7. Examine the gas supply line for leaks.

8. Connect the DC wiring to the refrigerator:

   - Connect the DC wires to the refrigerator.

   - Install the DC fuse or connect the DC wiring to the battery or the converter.

9. Connect the black AC power cord to the receptacle.

Wiring Pictorial

The parts in the wiring pictorial are(See Art01577):

1 ..... 120 VAC Power cord
2 ..... -12 VDC com
3 ..... +12 VDC
4 ..... Power board
5 ..... Gas solenoid valve
6 ..... Thermister / light assembly
8 ..... Divider heater
9 ..... AC heater
10 ..... Fan (optional)
11 ..... Thermostat (optional)
12 ..... Display board
17 ..... Spark electrode
18 ..... 5 Amp fuse

Wiring Diagram

The parts in the wiring diagram are (See Art01578):

1 ..... 120 VAC Connection
2 ..... -12 VDC Com
3 ..... +12 VDC
4 ..... Power board
5 ..... Gas solenoid valve
6 ..... Thermister
7 ..... Interior light
8 ..... Divider heater
9 ..... AC heater
10 ..... Fan (optional)
11 ..... Thermostat (optional)
12 ..... Display board
13 ..... Selector switch
14 ..... Temperature switch
15 ..... Microprocessor
16 ..... LED

Display Codes

Light and Status	Meaning
ON light is on. GAS light is off.	The refrigerator is operating on AC.
ON light is on. GAS light is on.	The refrigerator is operating on propane gas.

Art01852

Fault Codes

Light and Status	Meaning	Corrective Actions
ON light is off	DC voltage is unavailable to the refrigerator control panel or the refigerator is OFF.	Check: - That the refrigerator is ON. - That the battery charging equipment of the vehicle is operational. - That the AC/DC converter is operational (if applicable). - See your dealer or authorized Norcold Service Center.
ON light and GAS light both flash about once per second.	No energy source is available. AC voltage is not available (or the refrigerator is in Manual GAS mode), and the burner did not ignite or re-ignite.	If in AUTO mode, check: - That the refrigerator is plugged in to a servicable outlet. - That the fuse or circuit breaker of the vehicle is intact. - That the vehicle generator is operational (if applicable). In any mode, check: - That there is not air in the propane gas supply line. See "Removing air from the propane gas supply lines" section of this manual. - That the valve of the propane gas tank(s) is open. - That the propane gas is at the correct pressure. - That the manual shut off valve of the refrigerator is open. - Reset the refrigertor by turning it OFFand then back to AUTO or GAS mode. - See your dealer or authorized Norcold Service Center.
ON light is on. GAS light flashes about once per second.	The burner did not ignite or re-ignite. The refrigerator is in "gas lock-out", but AC voltage has returned and the refrigerator is operating on AC.	Check: - That there is not air in the propane gas supply line. See "Removing air from the propane gas supply lines" section of this manual. - That the valve of the propane gas tank(s) is open. - That the propane gas is at the correct pressure. - That the manual shut off valve of the refrigerator is open. - Reset the refrigertor by turning it OFF and then back to AUTO or GAS mode. - See your dealer or authorized Norcold Service Center.
ON light is on , but flashes off 1 time about every 3 seconds.	The temperature sensor failed. The refigerator is operating on the "Back-Up Operating System".	This is not owner serviceable, see your dealer or authorized Norcold Service Center.
ON light is on , but flashes off 2 times about every 3 seconds.	The mode switch failed. The refrigerator is operating in the last known mode.	This is not owner serviceable. See your dealer or authorized Norcold Service Center
ON light is on , but flashes off 3 times about every 3 seconds. GAS light is on.	The AC heater failed. The refigerator will operate on propane gas only.	This is not owner serviceable. See your dealer or authorized Norcold Service Center
ON light is on, but flashes off 4 times about every 3 seconds.	This is a fault within the refrigerator controls.	This is not owner serviceable. See your dealer or authorized Norcold Service Center.
ON light is on, but flashes off 5 times about every 3 seconds.	The refrigerator cooling unit has stopped cooling.	1st time - Before reset Check: - That the vents are not blocked. - That a door(s) is not open. Close door(s). - That the vehicle is level. 2nd time - After reset This is not owner serviceable. See your dealer or authorized Norcold Service Center. Art01583

Replacement Parts

You may purchase replacement parts through your local RV dealer or authorized Norcold Service Center.

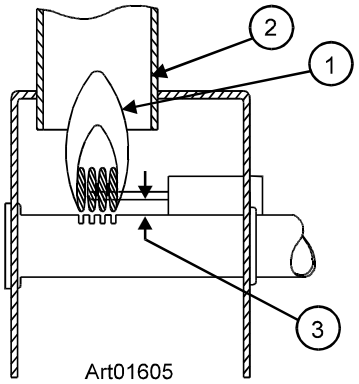

Art01605

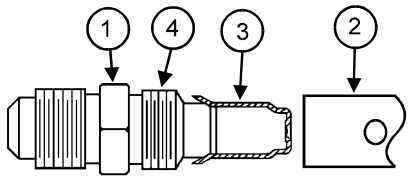

Art 00956

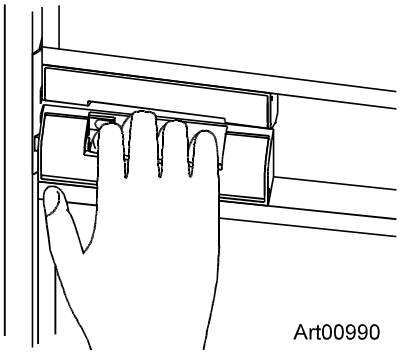
Art00990

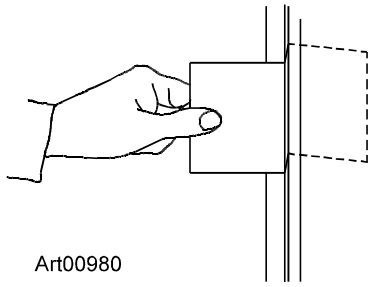
Art00980

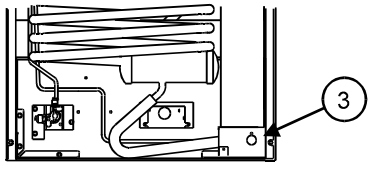

Art00982

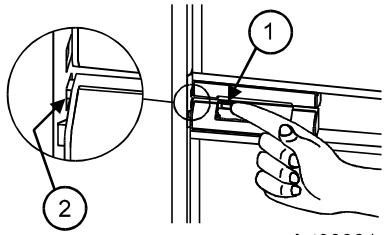

Art00991

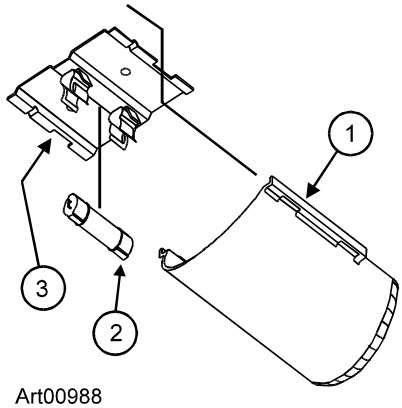

Art00988

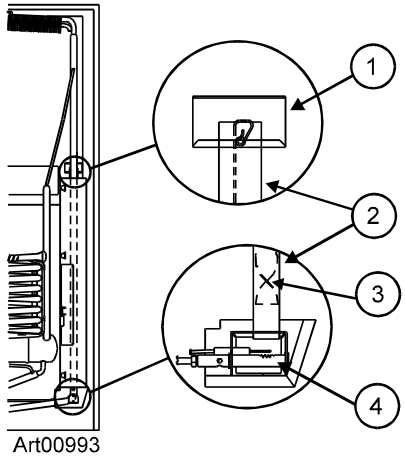

Art00993

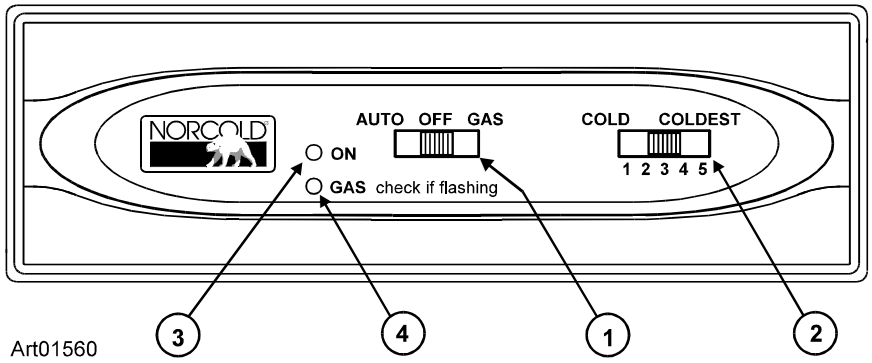

Art01560

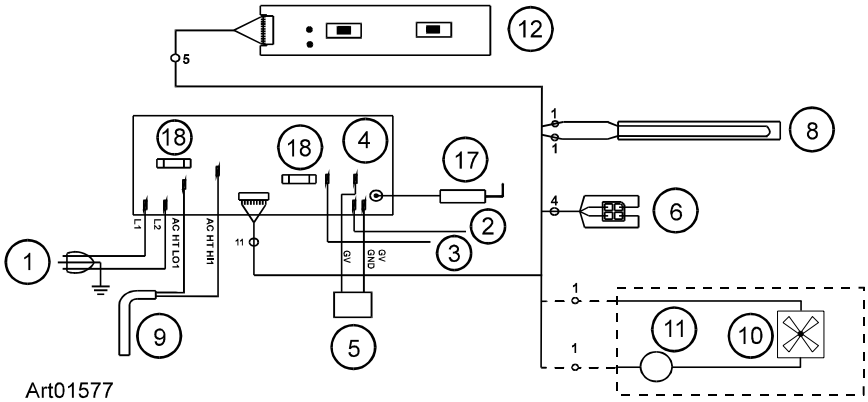

Art01577

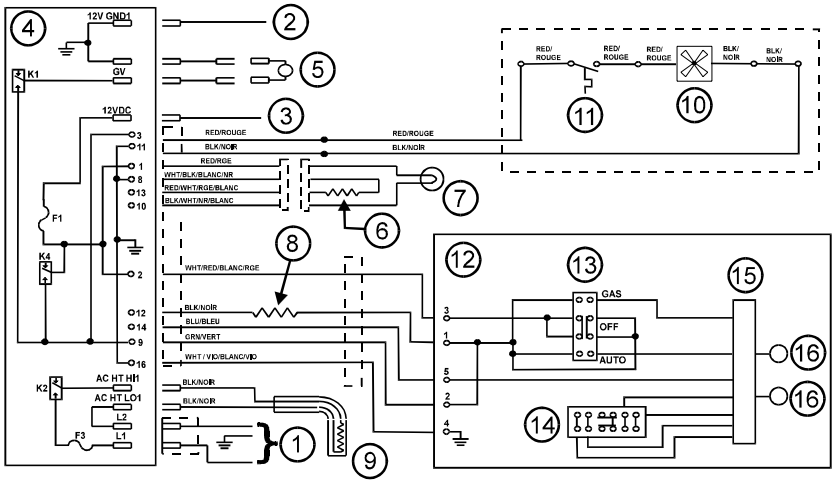

Art01578