Owner's Manual

For Polar 7 Series (N7V, N7X or N7LX) models: 7 cu. ft., 2-way, 3-way (only available on LX models), or with ice maker, R.V Refrigerators.

For Polar 8 Series (N8V, N8X or N8LX) models: 8 cu. ft., 2-way, 3-way (only available on LX models), or with ice maker, R.V Refrigerators.

The model numbers of 3-way (only available on LX models) refrigerators include ".3". The model numbers of 2-way refrigerators do not.

Any letters following the above model numbers means a refrigerator option.

WARNING FIRE OR EXPLOSION HAZARD

If you smell gas or ammonia:

1. Open Windows
2. Do not attempt to light appliance.
3. Do not touch electrical switches.
4. Extinguish any open flame.
5. Shut off fuel supply.
6. Evacuate immediately and call emergency services.

Failure to follow these instructions could result in fire or explosion, which could cause property damage, personal injury, or death.

WARNING Improper installation, adjustment, alteration, service or maintenance can cause injury or property damage. Refer to this manual. For assistance or additional information, contact a qualified installer, service agency, or the gas supplier.

FOR YOUR SAFETY

Do not store or use gasoline or other flammable vapors and liquid in the vicinity of this or any other appliance.

English

NORCOLD, Inc.
P.O. Box 4248
Sidney, OH 45365-4248

Norcold Customer Support Dept.
Telephone: 800-543-1219
Fax: 734-769-2332
Web Site: www.norcold.com

Part No. 639301B (6/4/2018)

Table of Contents

For defined warranty terms, please see the one page warranty statement included in the product information packet.

Safety Awareness 3
Safety Instructions 3
About Your Refrigerator 4
- Storage volume 4
- Leveling 4
- Operation during travel 4
- Food compartment 4
- Freezer compartment 4
- Crisper(s) 4
- Door bins 4

Door bin slide(N7LX and N8LX models) 5
- Adjustable shelves 5
- Door handles 5
- Interior light 6
- Shut down 6
- Moisture reduction heater 6
- Temperature control system 6

Operating the Refrigerator Controls (N7V and N8V Models) 7
- Ignition and startup 7
- Air in the propane gas line 7
- Automatic Mode Operation (N7V and N8V models) 7
- Shut down 7
- Backup Operating System 7

Operating the Refrigerator Controls (N7X and N8X models) 8
- Ignition and startup 8
- Air in the propane gas line 8
- Automatic mode operation 8
- Manual AC mode operation 9
- Manual LP gas mode operation 9
- Shut down 9
- Backup operatiing system 9

Operating the Refrigerator Controls (All N7LX and N8LX) 10
- Ignition and startup 10
- Air in the Propane Gas supply lines 10
- Automatic Mode Operation 10
- Manual AC Mode Operation 11
- Manual LP Gas Operation 11
- Manual DC Operation 11
- Shut down 11

Effects of High Altitude on Propane Gas Operation 12
Effects of Freezing Temperatures on Refrigerator Operation 12
Icemaker (N7LXIM and N8LXIM models 12
- Icemaker Operation 13

Refrigerator Care Checklist 13
Defrosting 14
Cleaning 14
- Interior 14

Door Sealing 15
Refrigerator Storage 15
Ice Maker Storage (All N7LXIM and N8LXIM) 15
Refrigerator Maintenance Checklist 16
Refrigerator Maintenance 16
- Remove and clean burner 16

Remove the Refrigerator 17
Re-Install the Refrigerator 18
Replacement Parts 18
Wiring Pictorial 19
Wiring Schematic 20
Fault Codes (All N7V and N8V models) 21
Fault Codes (All N7X and N8X models) 22
Fault Codes (All N7LX and N8LX models) 23

Safety Awareness

Read this manual carefully and understand the contents before you use the refrigerator.

Be aware of possible safety hazards when you see the safety alert symbol on the refrigerator and in this manual. A signal word follows the safety alert symbol and identifies the danger of the hazard. Carefully read the descriptions of these signal words to fully know their meanings. They are for your safety.

WARNING This indication means a hazard, which if ignored, can cause serious personal injury, death, or property damage.

CAUTION This indication means a hazard, which if ignored, can cause personal injury or property damage.

Safety Instructions

WARNING

- The storage of flammable materials behind or around the refrigerator creates a fire hazard. Do not use the area behind the refrigerator to store anything, especially flammable materials (gasoline, cleaning supplies, etc.)
- Do not remove the round ground prong from any of the AC power cords. Do not use a two prong adapter or an extension cord with any of the AC power cords.
- A circuit overload can result in an electrical fire if the wires and/or fuses are not the correct size. Use only the wire and fuse sizes as written in the "Installation Manual".
- Incorrect installation, adjustment, change to, or maintenance of this refrigerator can cause personal injury, property damage, or both. Have service and maintenance work done by your dealer or by an Norcold authorized service center.
- Disconnect both the AC and DC power sources before doing any maintenance work on the refrigerator. All service work on this refrigerator must be done by a qualified service technician.
- Do not bypass or change the refrigerator's electrical components or features.
- When you discard an appliance, remove all doors to prevent accidental entrapment and suffocation.
- Do not spray liquids near electrical outlets, connections, or the refrigerator components. Many liquids are electrically conductive and can cause a shock hazard, electrical shorts, and in some cases fire.
- The refrigerator cooling system is under pressure. Do not try to repair or to recharge a defective cooling system. The cooling system contains sodium chromate. The breathing of certain chromium compounds can cause cancer. The cooling system contents can cause severe skin and eye burns, and can ignite and burn with an intense flame. Do not bend, drop, weld, move, drill, puncture, or hit the cooling system.
- At regular intervals, make sure that the refrigerator flue the burner, the vent areas, and the ventilation air pathway between the vents are completely free from any flammable material or blockage. After a period of storage, it is especially important to check these areas for any flammable material or blockage caused by animals or insects.

CAUTION

- The rear of the refrigerator has sharp edges and corners. To prevent cuts or abrasions when working on the refrigerator, be careful and wear cut resistant gloves.

About Your Refrigerator

Storage Volume:

This refrigerator is made for storage of foods and frozen food and for making ice.

Total capacity N7 models - 6.5 cubic feet N8 models - 7.6 cubic feet

Leveling:

CAUTION **The refrigerator is made to operate within 3° off level side-to-side and 6° off level front-to-back (as looking at the front of the refrigerator). Operating it at more than these limits can cause damage to the cooling system and create a risk of personal injury or property damage. Make sure the vehicle is level before you operate the refrigerator.**

Operation during travel:

While the refrigerator should be level when the vehicle is stopped, performance during travel is not usually effected.

Food compartment:

Start up the refrigerator and let it cool for eight hours before loading with food. If the refrigerator does not start to cool down after about two hours, contact your dealer or a Norcold authorized service center.

For the best cooling performance:

- Let air move freely inside the entire food compartment.
- Do not cover the shelves with plastic, paper, etc.

To decrease the amount of ice that collects on the cooling fins:

- Cover all liquids and moist foods.
- Let all hot foods cool before putting them in the refrigerator.
- Do not open the door any longer than necessary.

Freezer compartment:

The freezer compartment is made to keep pre-frozen food frozen and not to quick freeze food. Keep pre-frozen foods in the freezer compartment.

NOTICE *Do not put other items on the ice tray while the water is freezing. The water freezes more rapidly if the thermostat is at the COLDEST position.*

Crisper(s):

The crisper(s) are located at the bottom of the fresh food compartment and supply a storage area to preserve fruit and vegetable freshness. Make sure that you always push the crispers fully in.

NOTICE *Do not wash the crispers in a dishwasher. The crispers are not dishwasher safe.*

Door bins:

You may put the door bins [52] of the freezer and fresh food compartment in a location that best meets your needs (See Art02632). To remove the bins, lift them over the locator and pull them forward. To install the bins, push them onto the locator.

NOTICE *Do not wash the door bins and bin slides in a dishwasher. The door bins and bin slides are not dishwasher safe.*

Door bin slide: (N7LX and N8LX models)

Each door bin [52] includes an adjustable door bin slide [53] to prevent the bin contents from moving or overturning during transit (See Art02632).

Push each door bin slide against the bin contents. To remove each door bin slide, rotate it out of the bin. Rotate the each bin, slide into the bin to install.

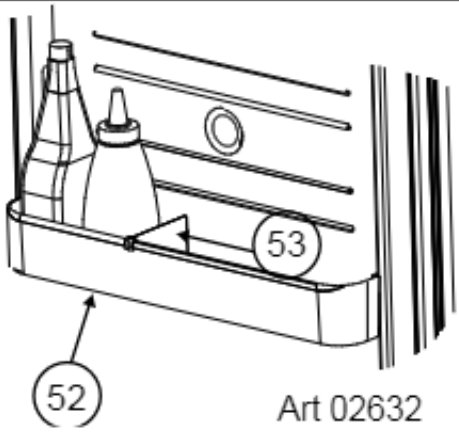

Art 02632

Adjustable shelves:

The shelves in the freezer and the fresh food compartment are made so you can remove them or move them.

To remove or move the shelf of the freezer:

- Pull the shelf forward out of the slot.
- Push it fully into the slot that you wish.

To remove or move the shelves of the fresh food compartment:

- Remove the screws [41] from the individual shelf retainers [54] in the back of the refrigerator (See Art02622).
- Remove the retainer.
- Pull each shelf forward out of the slot.
- Push each fully into the slot that you wish.
- Install the individual retainer in the back of the refrigerator with the screws.

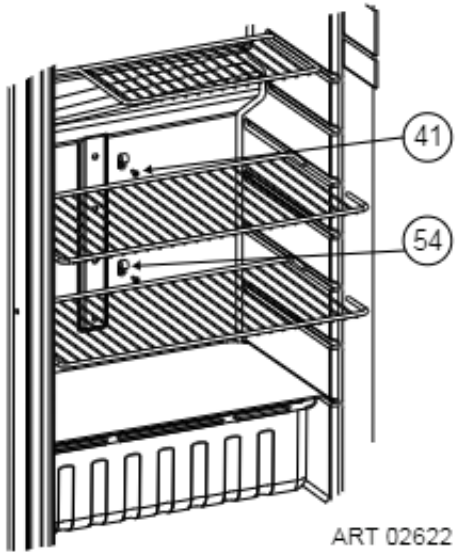

ART 02622

Door handles:

During travel, the door latch prevents the door from opening. When closing each door, push the door toward the refrigerator until you hear a “click” sound.

To open each door, pull the handle away from the refrigerator (See Art 02633).

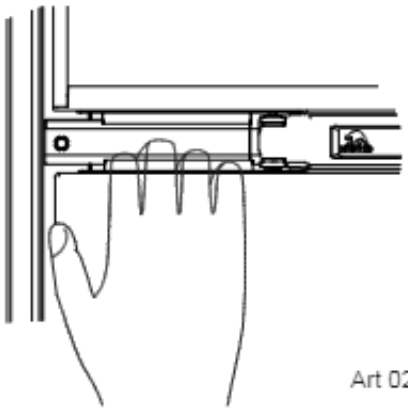
Art 02633

Interior light:

The interior light is at the top of the fresh food compartment. The light remains on at all times while the refrigerator is on. To replace the interior light:

Shut down:

- To shut down the refrigerator, touch and hold the ON/OFF button two seconds and release.

Unplug wire harness connector [154].

To remove interior light:

- Remove two (2) screws [41].

Install new light in reverse order.

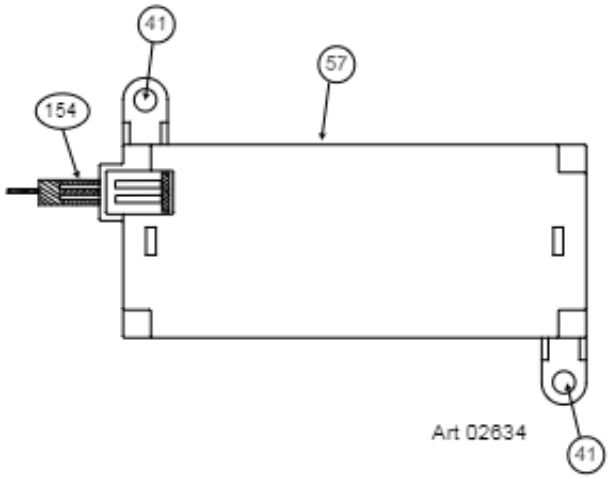

Art 02634

Moisture reduction heater:

The refrigerator has a heater that prevents moisture from forming on the center divider between the doors of the freezer and the fresh food compartment. The heater operates only when the refrigerator is ON.

Temperature control system:

Although the refrigerator is not frost -free, it is made to limit frost on the cooling fins. At regular intervals, the temperature control system automatically melts most of the frost from the cooling fins. The water from the cooling fins drains into a collection cup that is attached to the back of the refrigerator. The heat of the cooling system evaporates the water from the collection cup.

Operating the Refrigerator Controls: (All N7V and N8V models)

Ignition and start up:

NOTICE **Control boards are extremely sensitive. Evidence of tampering or removal from protective case will VOID any warranty.**

Before ignition or start up of the refrigerator:

- Make sure the air flow in the lower intake vent , through the refrigerator coils and condenser, and out the upper exhaust vent is not blocked or decreased.
- Make sure there are no combustible materials in or around the refrigerator.
- Make sure the DC voltage to the refrigerator is 12.0VDC.

Air in the propane gas supply lines

NOTICE For safety reasons,the refrigerators electronic controls are designed such that while operating in the LP GAS mode, the trial for ignition (maximum amount of the time the gas valve and igniter can be left on without a flame present) is limitied to 30 seconds. When starting the refrigerator for the first time, after storage, or after replacing the propane gas tank, the propane gas supply lines can have air in them.

Due to air in the gas supply lines, the burner may not ignite within the 30 second time limit. In the event this should happen the gas valve and igniter outputs will be turned off, the LP Gas mode will be "locked out", and the appropiate fault code will be shown in the display. See fault code section of this manual.

The gas lock out condition can be reset by powering the refrigerator OFF and then back ON, at which time, a new 30 second trial for ignition will commence. It may be necessary to repeat this procedure several times before expelling all the air from the LP gas supply line. If after repeated attempts, a flame is not established, stop and consult your local dealer or Authorized Norcold Service Center.

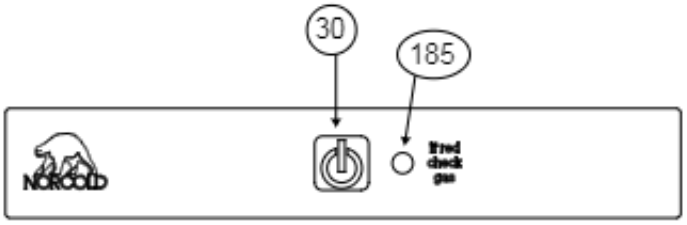

Art 02628

Automatic mode operation (N7V and N8V Models)

- Touch and release the ON / OFF button [30] to turn the refrigerator on.(See Art02628)
- If the indicator light [185] glows solid green, it means:
  - 120 volt AC power is available to the refrigerator.
  - The refrigerator is operating on AC electric power.
- If the indicator light [185] glows solid amber, it means:
  - 120 volt AC power is not available to the refrigerator.
  - The refrigerator is operating on propane gas.
- If the indicator light [185] glows solid red, it means:
  - There is a problem and the refrigerator is not cooling.
  - Refer to the "Fault code" section of this manual.

Shut down:

- To shut down the refrigerator, touch and hold the ON/OFF button [30] for two seconds and release.

Backup operating system:

This refrigerator has a backup operating system. The backup operating system allows the refrigerator to continue to cool if the temperature sensor of the refrigerator should fail. If this failure occurs:

- The refrigerator automatically changes to the backup operating system.
  - The indicator light [185] will turn off for one second, every twenty seconds.

- The backup operating system can over freeze or thaw the contents of the freezer and the fresh food compartment.

  - Make sure the temperatures of the freezer and the fresh food compartment are satisfactory.

Operating the Refrigerator Controls (N7X and N8X models)

Ignition and start up:(N7X and N8X models)

NOTICE **Control boards are extremely sensitive. Evidence of tampering or removal from protective case will VOID any warranty.**

Before ignition or start up of the refrigerator:

- Make sure the air flow in the lower intake vent , through the refrigerator coils and condenser, and out the upper exhaust vent is not blocked or decreased.

- Make sure there are no combustible materials in or around the refrigerator.

- Make sure the DC voltage to the refrigerator is 12.0VDC

Air in the propane gas supply lines

NOTICE For safety reasons,the refrigerators electronic controls are designed such that while operating in the LP GAS mode, the trial for ignition (maximum amount of the time the gas valve and igniter can be left on without a flame present) is limitied to 30 seconds. When starting the refrigerator for the first time, after storage, or after replacing the propane gas tank, the propane gas supply lines can have air in them.

Due to air in the gas supply lines, the burner may not ignite within the 30 second time limit. In the event this should happen the gas valve and igniter outputs will be turned off, the LP Gas mode will be "locked out", and the appropiate fault code will be shown in the display. See fault code section of this manual.

The gas lock out condition can be reset by powering the refrigerator OFF and then back ON, at which time, a new 30 second trial for ignition will commence. It may be necessary to repeat this procedure sveral times before expelling all the air from the LP gas supply line. If after repeated attempts, a flame is not established, stop and consult your local dealer or Authorized Norcold Service Center.

Automatic mode operation:

- Touch and release the ON/OFF button [30] to turn the refrigerator on.(See Art02627)

  - If the indicator light [185] glows solid green, it means the refrigerator is operating correctly.

- Touch the TEMP SET button [32] as needed to set the temperature setting.

  - One snowflake lit up is the warmest setting.

  - Five snowflakes lit up is the coldest setting.

- If the AUTO icon [277] and AC PLUG icon [283] are lit up, it means that:

  - 120 volt AC power is available to the refrigerator.

  - The refrigerator is operating on AC electric power.

- If the AUTO icon and the FLAME icon [284] are lit up, it means that:

  - 120 volt AC power is not available to the refrigerator.

  - The refrigerator is operating on propane gas.

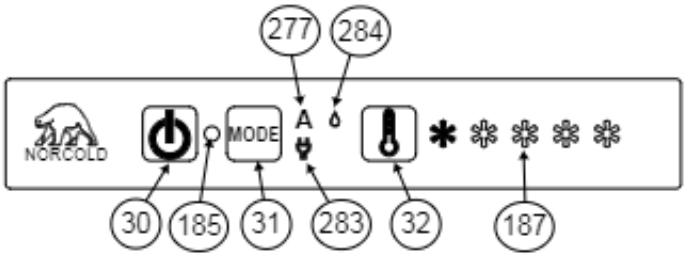

Art 02627

- If the indicator light [185] glows solid red, it means:
    - There is a problem and the refrigerator is not cooling.
    - Refer to the “Fault Code” section of this manual.

Manual AC Mode Operation:

- Touch and release the ON/OFF button [30] to start the refrigerator.
- Touch the MODE button [31] until the AUTO icon [277] goes off and only the AC PLUG icon [283] remains lit.
- Touch the TEMP SET button [32] as needed, to set the temperature setting.
- The AC PLUG icon [283] remains lit until you select a different operating mode or shut down the refrigerator.
    - If the indicator light [185] glows solid red or flashes, it means:
    - There is a problem and the refrigerator is not cooling.
    - Refer to the “Fault Code” section of this manual.

Manual LP Gas Mode Operation:

- Touch and release the ON/OFF button [30] to start the refrigerator
- Touch the MODE button [31] until the AUTO icon goes off and only the LP GAS icon [284] remains lit.
- Touch the TEMP SET button [32] as needed, to set the temperature setting.
- The FLAME icon [284] remains lit until you select a different operating mode or shut down the refrigerator.
    - If the indicator light [185] glows solid red or flashes, it means:
    - There is a problem and the refrigerator is not cooling.
    - Refer to the “Fault code” section of this manual.

Shut down - All models:

- To shut down the refrigerator, touch and hold the ON/OFF button [30] for two seconds and release.

Backup operating system:

This refrigerator has a backup operating system. The backup operating system allows the refrigerator to continue to cool if the temperature sensor of the refrigerator should fail.

If this failure occurs:

- The refrigerator automatically changes to the backup operating system.
    - Snowflake(s) will flash when TEMP SET button [32] is touched.
- The backup operating system can over freeze or thaw the contents of the freezer and the fresh food compartment.
    - Make sure the temperatures of the freezer and the fresh food compartment are satisfactory.

Operating the Refrigerators Controls (All N7LX and N8LX models)

Ignition and start up:(All N7LX and N8LX models)

NOTICE **Control boards are extremely sensitive. Evidence of tampering or removal from protective case will VOID any warranty.**

Before ignition or start up of the refrigerator:

- Make sure the air flow in the lower intake vent, through the refrigerator coils and condenser, and out the upper exhaust vent is not blocked or decreased.
- Make sure there are no combustible materials in or around the refrigerator.
- Make sure the DC voltage to the refrigerator is 12.0VDC

Air in the propane gas supply lines

NOTICE For safety reasons,the refrigerators electronic controls are designed such that while operating in the LP GAS mode, the trial for ignition (maximum amount of the time the gas valve and igniter can be left on without a flame present) is limitied to 30 seconds. When starting the refrigerator for the first time, after storage, or after replacing the propane gas tank, the propane gas supply lines can have air in them.

Due to air in the gas supply lines, the burner may not ignite within the 30 second time limit. In the event this should happen the gas valve and igniter outputs will be turned off, the LP Gas mode will be "locked out", and the appropiate fault code will be shown in the display. See fault code section of this manual.

The gas lock out condition can be reset by powering the refrigerator OFF and then back ON, at which time, a new 30 second trial for ignition will commence. It may be necessary to repeat this procedure several times before expelling all the air from the LP gas supply line. If after repeated attempts, a flame is not established, stop and consult your local dealer or Authorized Norcold Service Center.

Automatic Mode Operation:

- Touch and release the ON/OFF button [30] to turn the refrigerator on. (See Art 02629).
- Touch the TEMP SET button [32] as needed to set the temperature setting.
  - Number one(1) shown in the display [187] is the warmest setting.
  - Number nine(9) shown in the display [187] is the coldest setting.

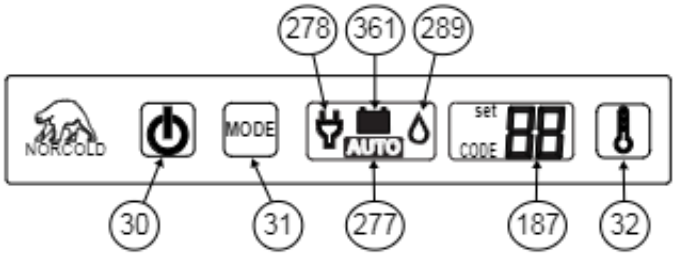

Art 02629

- If the AUTO icon [277] and AC PLUG icon [278] are lit up, it means that:
  - 120 volt AC power is available to the refrigerator.
  - The refrigerator is operating on AC electric power.
  - After ten seconds, the backlight of the display goes off.
- If the AUTO icon and the FLAME icon [289] are lit up, it means that:
  - 120 volt AC power is not available to the refrigerator.
  - The refrigerator is operating on propane gas.
  - After ten seconds, the backlight of the display goes off.

If neither 120 volts AC nor propane gas are available to the refrigerator :

- 2-way refrigerators:
  - The fault codes “no AC” and then “no FL” show in the display and an audible alarm sounds.
  - Refer to the “Fault Codes” section of this manual for any faults displayed.
- 3-way refrigerators only:
  - The Auto icon and the Battery icon [361] are lit up.
  - After ten seconds, the backlight of the display goes off
  - This means that the refrigerator is operating on DC electric.

If an energy source is available to the refrigerator but is not operating correctly:

- While operating in the Automatic mode, the refrigerators electronic controls will automatically select the energy source using the following priority scheme:

  1st choice: AC Electric
  2nd choice: LP GAS
  3rd choice: DC Electric (3-way refrigerators only)

  - When in the Auto mode, if a higher priority choice becomes available (i.e., AC voltage reapplied), the control shall stop using the current mode and switch to the higher priority mode.

Manual AC Mode Operation:

- Touch and release the ON/OFF button [30] to start the refrigerator
- Touch the MODE button [31] until the AUTO icon goes off and only the AC PLUG icon [278] remains lit.
- Touch the TEMP SET button [32] as needed, to set the temperature setting.
- The AC PLUG icon [278] remains lit until you select a different operating mode or shut down the refrigerator.

Manual LP GAS Operation:

- Touch and release the ON/OFF button [30] to start the refrigerator
- Touch the MODE button [31] until the AUTO icon goes off and only the FLAME icon [289] remains lit.
- Touch the TEMP SET button [32] as needed, to set the temperature setting.
- The FLAME icon [278] remains lit until you select a different operating mode or shut down the refrigerator.

Manual DC Operation:

- Touch and release the ON/OFF button [30] to start the refrigerator
- Touch the MODE button [31] until the AUTO icon goes off and only the BATTERY icon [361] remains lit.
- Touch the TEMP SET button [32] as needed, to set the temperature setting.
- The Battery icon [278] remains lit until you select a different operating mode or shut down the refrigerator.

Shut down - All models:

- To shut down the refrigerator, touch and hold the ON/OFF button[30] for two second and release.

Effects of High Altitude on Propane Gas Operation

When you operate the refrigerator on propane gas at altitudes higher than 5500 feet above sea level:

- You may experience reduced cooling performance of the refrigerator.
- You may experience burner outages.

To avoid these possible problems, Norcold recommends that you operate the refrigerator on AC when at altitudes higher than 5500 feet above sea level.

Effects of Freezing Temperatures on Refrigerator Operation

A gas absorption refrigerator is not designed to operate in freezing temperatures. If the refrigerator is not equipped for low temperature operation, and if the cooling system of the refrigerator is exposed to temperatures of 32° F. or lower for an extended period of time, the refrigerator operation may be disrupted. The refrigerator operation will resume when the cooling system of the refrigerator warms sufficiently.

If the refrigerator is equipped for low temperature operation, the refrigerator will operate in temperatures down to 0° F.

Disrupted operation of the refrigerator, due to extended exposure to temperatures of 32° F. or lower, and any costs incurred to warm the cooling system of the refrigerator are not covered by the Norcold limited warranty. Please contact your local RV dealer for information about how to resume refrigerator operation or about how to equip your refrigerator for operation in freezing temperatures.
Do not change the installation or the venting of your refrigerator. Refrigerator failures, which are the result of changes to either the refrigerator installation or to the venting, are not covered by the Norcold limited warranty.

Ice Maker (N7LXIM and N8LXIM models)

The ice maker is assembled to the refrigerators at the factory as optional equipment. If the refrigerator does not have a factory installed ice maker, one can not be added to the refrigerator at a later time.

The ice maker is fully automatic and will operate in ambient temperatures as low as 0° F. To allow operation at temperatures between 0° F. and 32° F., the ice maker has a heater on the solenoid water valve and on the water line between the solenoid water valve and the ice maker.

CAUTION **The water line heater does not protect the water supply line from the vehicle shut off valve to the solenoid water valve on the back of the refrigerator.**

When the freezer temperature of the refrigerator is low enough, the ice maker opens the water solenoid valve and fills the mold. The ice maker ejects the frozen ice into a storage bin. As the storage bin fills, the ice raises the shut-off arm until it turns off the ice maker. As you use the ice and lower the ice level in the storage bin, the shut-off arm also lowers. This turns the ice maker on and begins the process of making ice.

NOTICE For maximum production of ice, the freezer blower must be turned on.

The ice maker operates on:

- Cold potable water at a pressure of 15 psi - 125 psi.
- 120 Volts AC (108 VAC min. - 132 VAC max.).

Ice maker operation:

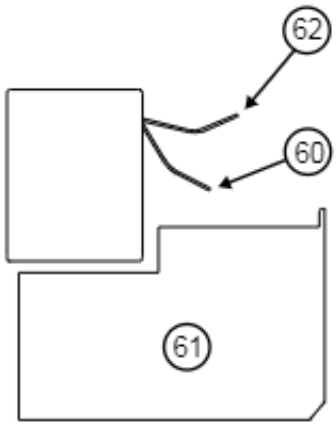

Art 01015

1. Make sure the ice maker AC power connection is secure.
   - On N7LXIM and N8LXIM models, the refrigerator AC power cord supplies AC to the ice maker.
   - On model N8LXIM, a separate (white) AC power cord supplies AC to the ice maker.
2. Open the water shut off valve of the vehicle.

NOTICE *Make sure that the ice maker arm can move freely and does not touch the frozen foods in the freezer.*

3. Push the ice maker arm down to the ON position [60] (See Art 01015).

CAUTION *If you operate the refrigerator without connecting the water supply line and/or opening the water shut off valve of the vehicle, make sure the ice maker arm is up in the OFF position.*

4. Allow the freezer to cool enough and ice production will begin to fill the storage bin [61].

NOTICE *New plumbing connections and/or impurities in the water supply line after winterizing can cause the first ice to be discolored or have an odd flavor.*

5. To stop the ice maker, push the ice maker arm up to the OFF position [62].

Refrigerator Care Checklist

Your refrigerator will give you years of trouble free service if you do these simple checks every three to six months:

- Keep the food compartment and the freezer clean. See "Cleaning".
- Defrost the refrigerator as necessary. See "Defrosting".
- Make sure the door seals correctly. See "Door Sealing".
- Be aware of any cooling changes that are not because of weather, loading, or gas control changes. If changes occur, contact your dealer or service center.
- Make sure the gas supply is propane gas only and not butane or a butane mixture.
- When in propane gas operation, examine the appearance of the flame. See "Gas Flame Appearance".
- Make sure the air flow in the lower intake vent, through the refrigerator coils and condenser, and out the upper exhaust vent is not blocked or decreased.
- Make sure the area behind the refrigerator is clear. Do not use the area behind the refrigerator for storage of anything, especially gasoline and other flammable vapors and liquids.

Defrosting

The cooling fins of the refrigerator operate at below freezing temperature and will naturally form frost from humidity, which is always present in the air. The humidity inside the refrigerator increases:

- With higher outside temperature and humidity.
- With the storage of non-sealed fresh foods or warm foods.
- With the amount of time that the door(s) are open.
- With any air leakage into the refrigerator.

Although the refrigerator is not frost -free, it is made to limit frost on the cooling fins. At regular intervals, the temperature control system automatically melts most of the frost from the cooling fins. The water from the cooling fins drains into a collection cup that is attached to the back of the refrigerator. The heat of the cooling system evaporates the water from the collection cup.

It is normal for frost to collect inside the freezer. Excess frost decreases the cooling performance of the refrigerator. Defrost the refrigerator and freezer as necessary:

- Remove all food from the refrigerator.
- Turn the refrigerator OFF.

NOTICE *Defrosting the refrigerator makes excess water inside the refrigerator.*

- Remove the drain hose from the drip cup at the rear of the refrigerator.
- Put the drain hose into a half-gallon or larger container to capture water.
- Put dry towels (etc.) inside the refrigerator and freezer to absorb melted frost.

CAUTION **High temperatures can cause the inside surfaces of the refrigerator to warp or melt. Do NOT use pans of HOT water, a hair dryer, or any other high temperature devices to defrost the refrigerator. Do not use any hard or sharp objects to remove frost. Damage to the interior of the refrigerator can occur.**

- To increase the speed of defrosting, put pans of WARM water in the refrigerator and freezer.
- Remove the wet towels (etc.) and dry the interior.
- Remove the drain hose from the large container and put the drain hose back into the drip cup.
- Remove the large container from the enclosure.
- Start up the refrigerator.
- Allow the refrigerator to cool down.
- Return all food to the refrigerator.

Cleaning

Interior:

A good time to clean the refrigerator is just after you defrost it. Clean the inside of the refrigerator as often as necessary to avoid food odors:

- Remove all food from the refrigerator.

NOTICE *Do not use abrasive cleaners, chemicals, or scouring pads because they can damage the interior of the refrigerator.*

- Wash the interior with a mild cleaner or a solution of liquid dish detergent and warm water.
- Rinse with a solution of baking soda and clean water.
- Dry with clean cloth.
- Put all food in the refrigerator.

Door Sealing

Check the seal of the doors.

If either door does not seal correctly, excess frost will collect inside the refrigerator. Make sure the doors seal correctly (See Art00980):

- Close each door on a piece of paper that is about the size and thickness of a dollar bill.
- Gently pull the paper.
  - You should feel a slight drag between the gasket and the cabinet.
  - Do this on all four sides of the door.
  - If you do not feel a slight drag on the paper, the door does not seal correctly.
  - Have your dealer or an authorized Norcold Service Center correct the seal of the door.

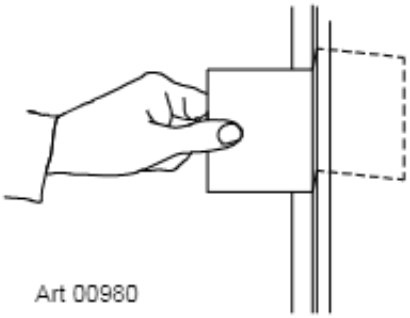

Art 00980

Refrigerator Storage

Before the refrigerator is stored for an extended (seasonal) period of time:

- Defrost and clean the interior of the refrigerator.
- Close the doors with the storage latch.

If the refrigerator is stored for an extended period of time, before start up:

- Make sure there are no obstructions in the vents, the ventilation air pathway, the burner, the orifice, or the flue area.

Ice Maker Storage (All N7LXIM and N8LXIM models)

To prepare the ice maker for seasonal storage:

1. Close the vehicle water supply valve to the ice maker.
2. Push the ice maker arm up until it locks into the OFF position.
3. Remove the garden hose adapter from the water solenoid valve.
4. Remove the ice maker water line from the water solenoid valve
   - Do not unwrap the water line heater wires from around the water solenoid valve.
5. Drain all of the water from both the water supply line and the ice maker water line.
6. Put the end of the water supply line, the end of the ice maker water line, and the water solenoid valve each into a clean plastic bag.
7. Use tape to close each plastic bag around the water lines and the water solenoid valve.

To use the ice maker after seasonal storage:

CAUTION **Do not operate the ice maker when the ambient air temperature is 0° F. or lower. Damage to the water solenoid valve and the water supply line can occur.**

1. Remove the tape and plastic bags from the end of the water supply line, the end of the ice maker water line, and the water solenoid valve.
2. Connect the ice maker water line to the water solenoid valve.
3. Connect the garden hose adapter to the water solenoid valve.
4. Push the ice maker arm down into the ON position.
5. Open the vehicle water supply valve to the ice maker.

NOTICE *You should discard and not use the first two batches of ice cubes. It will take about three cycles for the ice maker to make fully formed and clean ice cubes.*

Refrigerator Maintenance Checklist

Read and understand the following maintenance sections of this manual.

NOTICE *Norcold is not responsible for installation, adjustment, alteration, service, or maintenance performed by anyone other than a qualified RV dealer or a Norcold authorized service center.*

WARNING ***Never attempt to run the gas train when it is not installed in the cooling unit because of the risk of electrical shock.***

Have a qualified RV dealer or a Norcold authorized service center do these annual safety and maintenance checks:

- Examine the gas supply lines for leaks.
  - Replace or repair if needed.
- Make sure the propane gas pressure is 11 inches of water column.
  - Adjust if needed.
- Make sure the combustion seal is complete and intact.
  - Replace or repair it if needed.
- Make sure the burner and the burner orifice are clean.
  - Clean if needed.
- Make sure the electrode is clean and that the spark gap is 3/16 inch. (See Art 02673)
  - Adjust if needed.

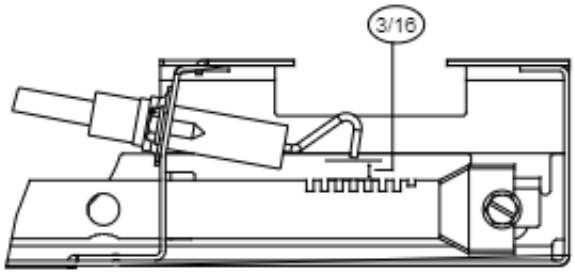

Art 02673

- Make sure the AC voltage is 108 - 132 volts and the DC voltage is 10.5 - 15.4 volts.
- Make sure the area at the rear of the refrigerator is free of any combustible materials, gasoline, and other flammable vapors and liquids.

Refrigerator Maintenance

While in GAS operation, examine the appearance of the gas flame:

- Open the lower intake vent.

CAUTION **The burner box door can be hot. Wear gloves to avoid burns.**

- Open viewing door.
- Look at the gas flame [75] (See Art 02684).
  - The flame should be:
    - A darker blue color on the inside of the flame and a lighter blue color on the outside of the flame.
    - A constant shape without flickering.
  - Contact your dealer or Norcold authorized service center if the flame is:
    - yellow
    - flickering or changing shape.
  - Make sure the flame does not touch the inside of the flue tube [76].
  - If the flame touches the inside of the flue tube, contact your dealer or Norcold authorized service center.
- Close the burner box door.

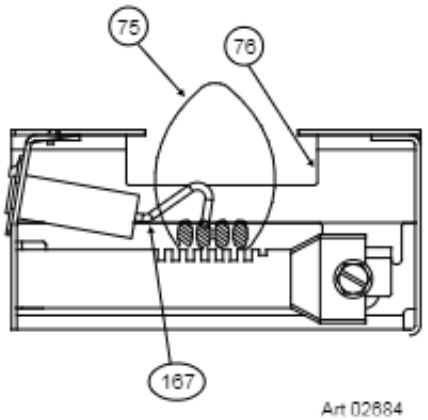

Art 02684

Remove and clean the burner orifice:

Your dealer or Norcold authorized service center must do this procedure.

Remove and clean the burner orifice:

- Close the valve at the propane gas tank(s).
- Push the ON / OFF button to shut down the refrigerator.
- Open the lower intake vent to expose the back of the refrigerator.

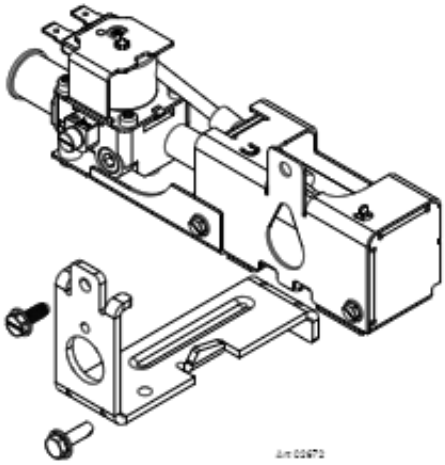

CAUTION **The burner box cover can be hot. Wear gloves to avoid burns.**

- Disconnect the the Gas Train Assembly (GTA) from the LP supply.

WARNING **To avoid possible propane gas leaks, always use two wrenches to loosen and tighten the gas supply line connections.**

- Remove the Gas Train Assembly from the cooling unit by removing the two screws. (See Art 02672)

WARNING **Do not try to remove the orifice [79] from the orifice adapter [80] when cleaning. Removal will damage the orifice and seal of the orifice and can cause a propane gas leak. Leaking propane gas can ignite or explode which can result in dangerous personal injury or death. Do not clean the orifice with a pin or other objects.**

- Clean the openings of the burner tube with compressed air pressure only (See Art 02671)
- Assemble the gas train assembly back to the cooling unit and tighten the two screws removed.
- Assemble the gas supply to the gas train assembly and tighten using two wrenches.
- Open the valve at the supply gas tank(s) and turn on the refrigerator choosing gas as the power source.
- Check all connections for gas leaks using leak test solution.
- Replace lower intake vent.

Remove the Refrigerator

Your dealer or Norcold authorized service center must do this procedure.

CAUTION **The rear of the refrigerator has sharp edges and corners. To prevent cuts or abrasions when working on the refrigerator, be careful and wear cut resistant gloves.**

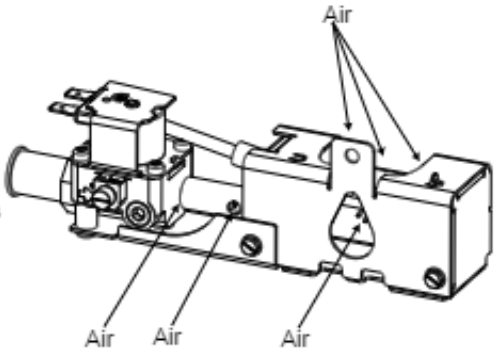

1. Close the valve at the propane gas tank(s).

WARNING **To avoid possible propane gas leaks, always use two wrenches to loosen and tighten the gas supply line connections.**

2. Open the lower intake vent
3. Remove the black AC power cord from the receptacle.
4. Remove the DC wiring from the refrigerator:

Art 02671

- Put a mark on the DC wires so you can put them back in the correct location.
- Remove the DC fuse or remove the DC wiring from the battery or the converter.
- Remove the DC wires from the refrigerator.

5. Remove the gas supply line from the bulkhead fitting of the refrigerator.
6. Remove the screws from the mounting flange at the rear of the refrigerator.
7. Remove the top plastic trim by pulling it from the mounting brackets.
8. Remove the screws from the upper and lower mounting flanges on the front of the refrigerator.
9. Remove the refrigerator from the opening.

Reinstall the Refrigerator

Your dealer or Norcold authorized service center must do this procedure.

WARNING **Make sure the combustion seal is not broken, is completely around the refrigerator mounting flanges, and is between the mounting flanges and the wall of the enclosure. If the combustion seal is not complete, exhaust fumes can be present in the living area of the vehicle. The breathing of exhaust fumes can cause dizziness, nausea, and in extreme cases, death.**

1. Push the refrigerator completely into the enclosure.
2. Put screws through the upper mounting bracket of the refrigerator and into the enclosure wall. Snap top plastic trim back into place.
3. Push the bottom trim piece into the front of the refrigerator.
4. Put two screws through the bottom trim piece, the mounting flange, and into the floor.
5. Install the screws in the mounting flange at the rear of the refrigerator.

WARNING **To avoid possible propane gas leaks, always use two wrenches to loosen and tighten the gas supply line connections.**

6. Attach the gas supply line to the gas train assembly fitting of the refrigerator.
7. Open the valve at the propane gas tank(s).

WARNING **Do not allow the leak checking solution to touch the electrical components. Many liquids are electrically conductive and can cause electrical shorts and in some cases, fire.**

8. Examine the gas supply line for leaks.
9. Connect the DC wiring to the refrigerator:
   - Connect the DC wires to the refrigerator.
   - Install the DC fuse or connect the DC wiring to the battery or the converter.
10. Connect the black AC power cord to the receptacle.

Replacement Parts

You may purchase replacement parts through your local RV dealer or authorized Norcold Service Center.

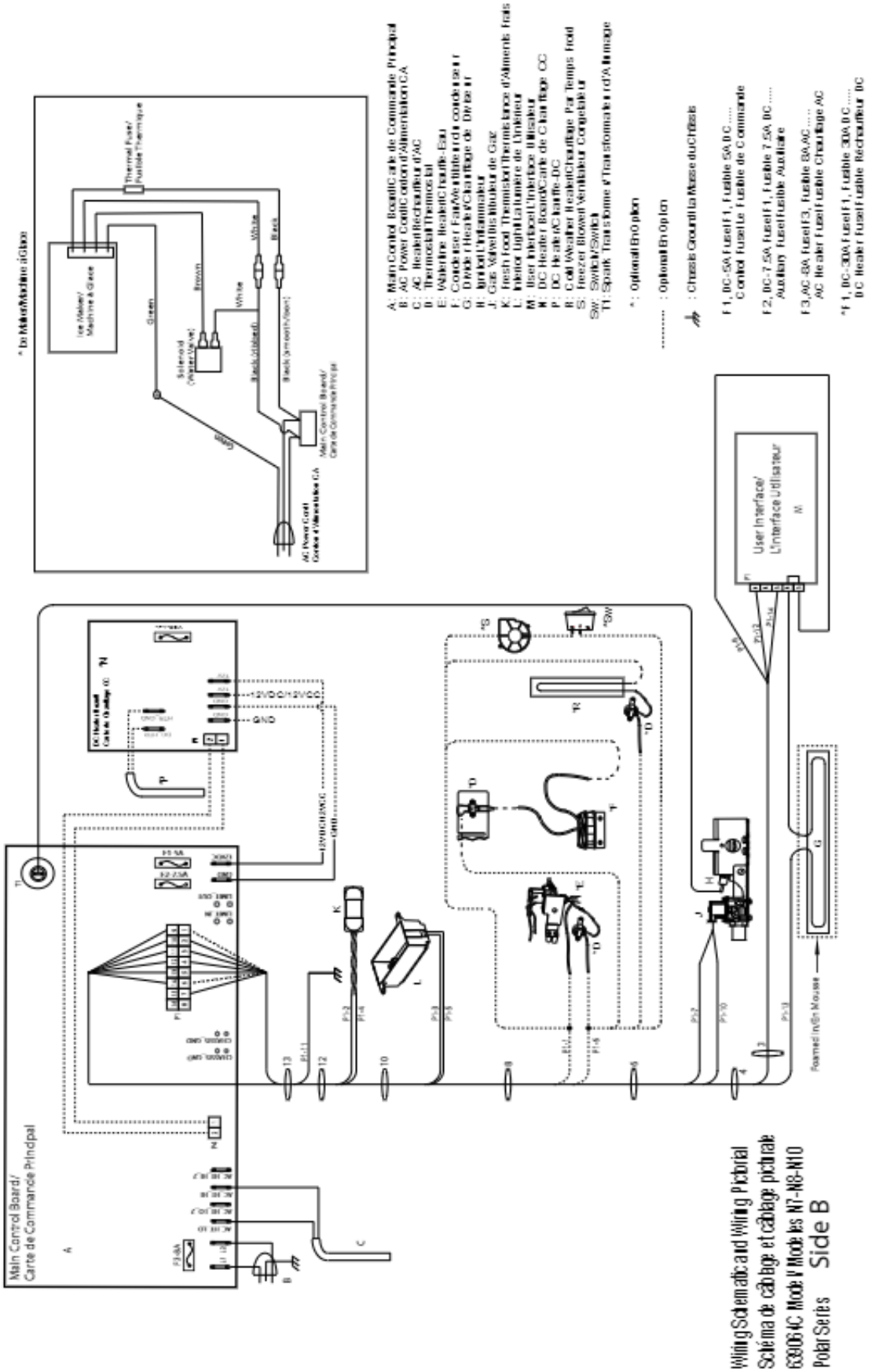
Wiring Schematic and Wiring Pictorial
Schéma de câblage et câblage pictorale
63906 4C Model Modèles N7-N8-N10
Polar Series
Side B
Main Control Board/
Carte de Commande Principal
User Interface/
L'Interface Utilisateur
Ice Maker/
Machine à Glace
Thermal Fuse/
Fusible Thermique
Main Control Board/
Carte de Commande Principal
AC Power Cord
Cordon d'Alimentation CA
Foamed In/En Mousse
A: Main Control Board/Carte de Commande Principal
B: AC Power Cord/Cordon d'Alimentation CA
C: AC Heater/Réchauffeur d'AC
D: Thermostat/Thermostat
E: Waterline Heater/Chauffe-Eau
F: Condenser Fan/Ventilateur du condenseur
G: Divider Heater/Chauffage de Diviseur
H: Ignitor/L'Inflammateur
J: Gas Valve/Distributeur de Gaz
K: Fresh Food Thermistor/Thermistance d'Aliments Frais
L: Interior Light/La lumière de L'Intérieur
M: User Interface/L'Interface Utilisateur
N: DC Heater Board/Carte de Chauffage CC
P: DC Heater/Chauffe-DC
R: Cold Weather Heater/Chauffage Par Temps Froid
S: Freezer Blower/Ventilateur Congelateur
SW: Switch/Switch
T1: Spark Transformer/Transformateur d'Allumage
*: Optional/En Option
: Optional/En Option
: Chassis Ground/La Masse du Châssis
F1, DC-5A Fuse/F1, Fusible 5A DC.....
Control Fuse/Le Fusible de Commande
F2, DC-7.5A Fuse/F1, Fusible 7.5A DC.....
Auxiliary Fuse/Fusible Auxiliaire
F3, AC-8A Fuse/F3, Fusible 8A AC.....
AC Heater Fuse/Fusible Chauffage AC
*F1, DC-30A Fuse/F1, Fusible 30A DC.....
DC Heater Fuse/Fusible Réchauffeur DC

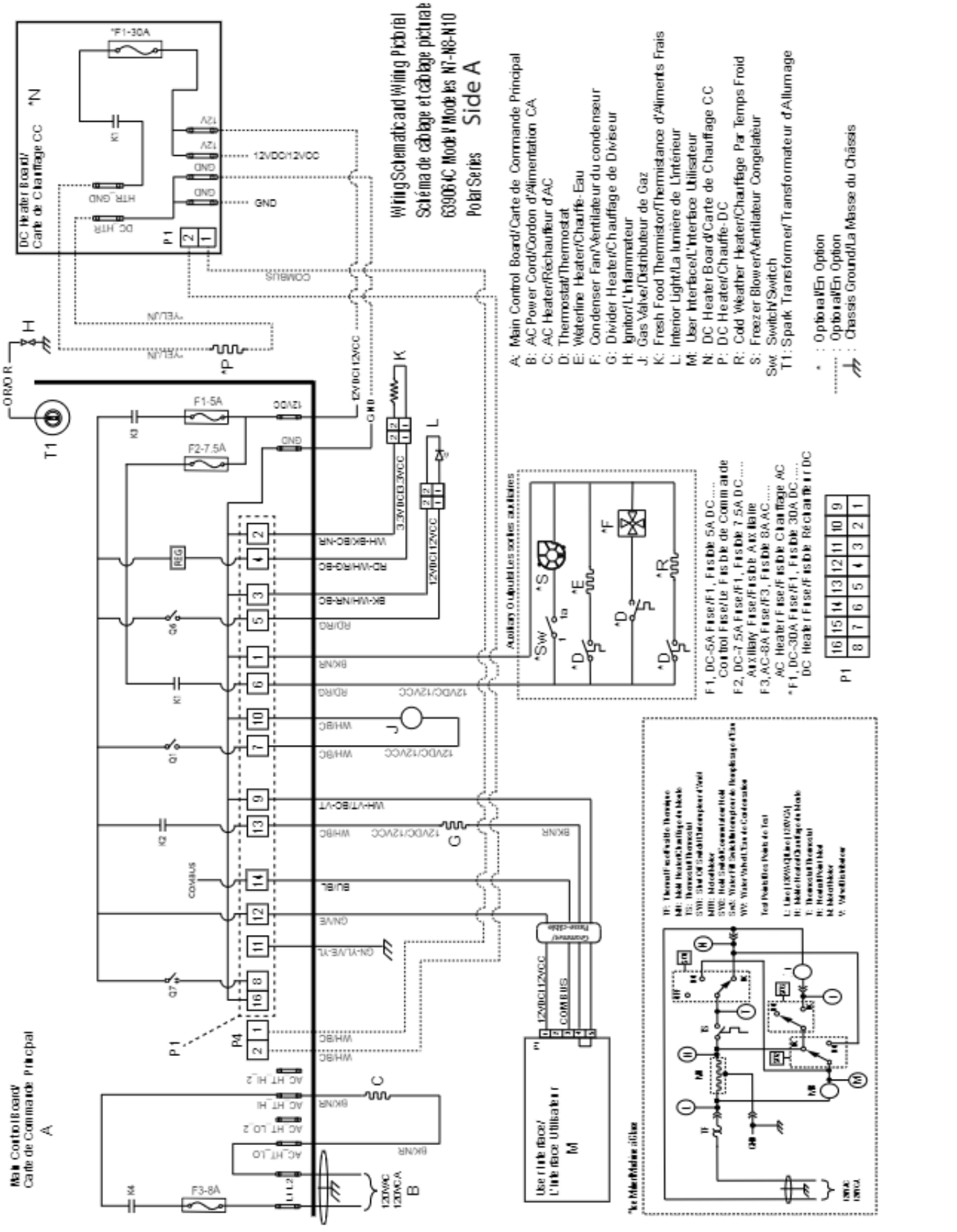
Wiring Schematic and Wiring Pictorial
Schéma de câblage et câblage picturale
639064C Model/Modèles N7-N8-N10
Polar Series
Side A
A: Main Control Board/Carte de Commande Principal
B: AC Power Cord/Cordon d'Alimentation CA
C: AC Heater/Réchauffeur d'AC
D: Thermostat/Thermostat
E: Waterline Heater/Chauffe-Eau
F: Condenser Fan/Ventilateur du condenseur
G: Divider Heater/Chauffage de Diviseur
H: Ignitor/L'Inflammateur
J: Gas Valve/Distributeur de Gaz
K: Fresh Food Thermistor/Thermistance d'Aliments Frais
L: Interior Light/La lumière de L'intérieur
M: User Interface/L'Interface Utilisateur
N: DC Heater Board/Carte de Chauffage CC
P: DC Heater/Chauffe-DC
R: Cold Weather Heater/Chauffage Par Temps Froid
S: Freezer Blower/Ventilateur Congelateur
Sw: Switch/Switch
T1: Spark Transformer/Transformateur d'Allumage
* : Optional/En Option
: Optional/En Option
: Chassis Ground/La Masse du Châssis
DC Heater Board/
Carte de Chauffage CC
*N
*F1-30A
12VDC/12VCC
GND
COMBUS
*YEL/JN
ORIOR
T1
F1-5A
F2-7.5A
F3-8A
12VDC
12VDC/12VCC
3.3VDC/3.3VCC
WH-BK/BC-NR
RD-WH/RG-BC
BK-WH/NR-BC
RD/RG
BK/NR
WH/BC
WH-VT/BC-VT
BU/BL
GN/VE
GN-YL/VE-YL
AC_HT_HI_2
AC_HT_HI
AC_HT_LO_2
AC_HT_LO
120VAC
120VCA
Main Control Board/
Carte de Commande Principal
A
Auxiliary Outputs/Les sorties auxiliaires
*Sw
*S
*E
*F
*D
*R
F1, DC-5A Fuse/F1, Fusible 5A DC....
Control Fuse/Le Fusible de Commande
F2, DC-7.5A Fuse/F1, Fusible 7.5A DC....
Auxiliary Fuse/Fusible Auxiliaire
F3, AC-8A Fuse/F3, Fusible 8A AC....
AC Heater Fuse/Fusible Chauffage AC
*F1, DC-30A Fuse/F1, Fusible 30A DC....
DC Heater Fuse/Fusible Réchauffeur DC
P1
16 15 14 13 12 11 10 9
8 7 6 5 4 3 2 1
Use r Interface/
L'Interface Utilisateur
M
COMBUS
*Ice Maker/Machine à Glace

Fault Codes (All N7V, and N8V models)

Indicator Light and Color	Meaning	Corrective Actions
Power ON indicator is SOLID RED	The refrigerator tried to operate on the selected energy source(s) with no success.	Turn the refrigerator power OFF and then back ON to reset. Check: - That the refrigerator is plugged into a serviceable outlet - That the battery charging equipment of the vehicle is operational - That the AC/DC converter is operational (if applicable) - That the valve of the propane gas tank(s) is open - That the propane gas is at the correct pressure - That the manual shut off valve of the refrigerator gas valve is open - That there is no air in the propane gas supply line - Please see your dealer or authorized Norcold Service Center
Flash Code "1" Red, flashes one (1) time every five (5) seconds, repeats.	This fault indicates a problem relating to the AC Heater	This is not owner serviceable. Please see your dealer or authorized Norcold Service Center.
Flash Code "2" Red, flashes four (2) times every five (5) seconds, repeats.	This fault is within the refrigerator electronic controls	Turn the refrigerator OFF and then back ON to reset. If the fault code continues, please see your dealer or authorized Norcold Service Center.
Flash Code "3" Red, flashes five (3) times every five (5) seconds, repeats	This fault indicates a flame is present at the burner, when there should not be	Turn the refrigerator OFF and then back ON to reset. If the fault code continues, please see your dealer or authorized Norcold Service Center
Flash Code "4" Red, flashes two (4) times every five (5) seconds, repeats.	This is a fault within the refrigerator controls.	This is not owner serviceable. Please see your dealer or authorized Norcold Service Center
Flash Code "5" Red, flashes eight (5) times every five (5) seconds, repeats	This fault indicates a flame is sensed at the burner when there should be none present.	This is not owner serviceable. Please see your dealer or authorized Norcold Service Center
Flash Code "8" Red, flashes nine (8) times every five (5) seconds, repeats.	This fault indicates the DC input voltage to the refrigerator is too low.	Turn the refrigerator power OFF and then back ON to reset. Check: - That the battery charging equipment of the vehicle is operational - That the AC/DC converter is operational (if applicable) - Please see your dealer or authorized Norcold Service Center
Flash Code "9" Red, flashes ten (9) times every five (5) seconds, repeats	This fault indicates the DC input voltage to the refrigerator is too high.	Turn the refrigerator power OFF and then back ON to reset. Check: - That the battery charging equipment of the vehicle is operational - That the AC/DC converter is operational (if applicable) - Please see your dealer or authorized Norcold Service Center
Flash Code "10" Red flashes eleven (10) times every five (5) seconds, repeats.	This fault indicates a loss of communication between the refrigerator controls.	This is not owner serviceable. Please see your dealer or authorized Norcold Service Center
Green, flashes off once every 20 seconds	The refrigerator is operating on AC electric power. The thermistor has been sensed as inoperable, so the temperature is being controlled via backup operating system.	This is not owner serviceable. Please see your dealer or authorized Norcold Service Center
Amber, flashes off once every 20 seconds	The refrigerator is operating on AC electric power. The thermistor has been sensed as inoperable, so the temperature is being controlled via backup operating system.	This is not owner serviceable. Please see your dealer or authorized Norcold Service Center
Blank display	The refrigerator is off or the refrigerator will not turn on.	Turn the refrigerator power ON Check: - That the battery charging equipment of the vehicle is operational - That the AC/DC converter is operational (if applicable) - Please see your dealer or authorized Norcold Service Center

Fault Codes (All N7X and N8X models)

Fault Code and Status	Meaning	Corrective Actions
POWER ON indicator is on solid red.	The refrigerator tried to operate on the selected energy source(s) with no success.	Turn the refrigerator power OFF and then back ON to reset. Check: - That the refrigerator is plugged into a servicable outlet - That the battery charging equipment of the vehicle is operational - That the AC/DC converter is operational (if applicable) - That the valve of the propane gas tank(s) is open - That the propane gas is at the correct pressure - That the manual shut off valve of the refrigerator gas valve is open - That there is no air in the propane gas supply line - See your dealer or authorized Norcold Service Center
Flash Code "1" Red, flashes one (1) time every five (5) seconds, repeats.	This fault indicates a problem relating to the AC Heater	This is not owner serviceable. See your dealer or authorized Norcold Service Center.
Flash Code "2" Red, flashes twice (2) times every five (5) seconds, repeats.	This fault is within the refrigerator electronic controls.	Turn the refrigerator OFF and then back ON to reset. If the fault code continues, please see your dealer or authorized Norcold Service Center
Flash Code "3" Red, flashes four (3) times every five (5) seconds, repeats.	This fault is within the refrigerator electronic controls	Turn the refrigerator OFF and then back ON to reset. If the fault code continues, please see your dealer or authorized Norcold Service Center
Flash Code "4" Red, flashes five (4) times every five (5) seconds, repeats.	This fault is within the refrigerator controls.	This is not owner serviceable. See your dealer or authorized Norcold Service Center.
Flash Code "5" Red, flashes eight (5) times every five (5) seconds, repeats.	This fault indicates a flame is sensed at the burner when there should be none present.	This is not owner serviceable. Please see your dealer or authorized Norcold Service Center
Flash Code "6" Red, flashes nine (6) times every five (5) seconds, repeats.	This fault indicates a problem relating to the DC heater. (3-way models only)	This is not owner serviceable. Please see your dealer or authorized Norcold Service Center
Flash Code "7" Red, flashes ten (7) times every five (5) seconds, repeats.	This fault is within the refrigerator electronic controls.	This is not owner serviceable. Please see your dealer or authorized Norcold Service Center
Flash Code "8" Red, flashes eleven (8) times every five seconds, repeats.	This fault indicates the DC input voltage to the refrigerator is too low.	Turn the refrigerator power OFF and then back ON to reset. Check: - That the battery charging equipment of the vehicle is operational - That the AC/DC converter is operational (if applicable) - Please see your dealer or authorized Norcold Service Center
Flash Code "9" Red, flashes on nine (9) times, is off five (5) seconds, repeats.	This fault indicates the DC input voltage to the refrigerator is too high.	Turn the refrigerator power OFF and then back ON to reset. Check: - That the battery charging equipment of the vehicle is operational - That the AC/DC converter is operational (if applicable) - Please see your dealer or authorized Norcold Service Center
Flash Code "10" Red, flashes on ten (10) times, is off five (5) seconds, repeats.	This fault indicates a loss of communication between the refrigerator controls.	Turn the refrigerator OFF and then back ON to reset. If the fault code continues, please see your dealer or authorized Norcold Service Center
Temperature setting snowflake(s) flash on/off at one (1) second intervals anytime the user interface (control) is "awake".	The thermistor has been sensed inoperable, so the temperature is being controlled via a backup operating system.	This is not owner serviceable. Please see your dealer or authorized Norcold Service Center
Blank display	The refrigerator is off or refrigerator will not turn on.	Turn the refrigerator power ON Check: - That the battery charging equipment of the vehicle is operational - That the AC/DC converter is operational (if applicable) - Please see your dealer or authorized Norcold Service Center

Fault Codes(All N7LX and N8LX models)

Fault codes	Fault Code Meanings	Corrective Actions
Alternately flashes "no" "FL" with an audible alarm	The burner did not ignite or re-ignite.	Turn the refrigerator power OFF and then back ON to reset. Check: - That the valve of the propane gas tank(s) is open - That the propane gas is at the correct pressure - That the manual shut off valve of the refrigerator gas valve is open - That there is no air in the propane gas supply line - Please see your dealer or authorized Norcold Service Center
Alternately flashes "no" "AC" with an audible alarm	AC voltage is not available to the refrigerator.	Turn the refrigerator power OFF and then back ON to reset. Check: - That the refrigerator is plugged into a serviceable outlet - That the fuse or circuit breaker of the vehicle is intact - That the vehicle generator is operational (if applicable) - Please see your dealer or authorized Norcold Service Center
Alternately flashes "AC" "HE" with an audible alarm	This fault indicates a problem relating to the AC heater.	This is not owner serviceable. Please see your dealer or authorized Norcold Service Center.
Alternately flashes "AC" "rE" with an audible alarm	This fault is within the refrigerator controls.	This is not owner serviceable. Please see your dealer or authorized Norcold Service Center.
Alternately flashes "Lo" "dc"	These faults indicate the DC input voltage to the refrigerator is too low.	Check: - That the battery charging equipment of the vehicle is operational - That the AC/DC converter is operational (if applicable) - Please see your dealer or authorized Norcold Service Center
Alternately flashes "Lo" "dc" with an audible alarm		
Alternately flashes "Lo" "dC" with an audible alarm.		
Alternately flashes "HI" "dc" with an audible alarm.	This fault indicates the DC input voltage to the refrigerator is too high.	Turn the refrigerator power OFF and then back ON to reset. Check: - That the battery charging equipment of the vehicle is operational - That the AC/DC converter is operational (if applicable) - Please see your dealer or authorized Norcold Service Center
Alternately flashes "no" "dt" with an audible alarm.	This fault indicates a loss of communication between the refrigerator controls.	Turn the refrigerator OFF and then back ON to reset. If the fault code continues, please see your dealer or authorized Norcold Service Center.
Displays "Sr" with an audible alarm.	This fault is within the refrigerator electronic controls.	Turn the refrigerator OFF and then back ON to reset. If the fault code continues, please see your dealer or authorized Norcold Service Center.
Alternately flashes "oP" "LI" with an audible alarm.	This fault is within the refrigerator electronic controls.	Turn the refrigerator OFF and then back ON to reset. If the fault code continues, please see your dealer or authorized Norcold Service Center.
Alternately flashes "FL" "- -" with an audible alarm.	This fault indicates a flame is sensed at the burner when there should be none present.	This is not owner serviceable. Please see your dealer or authorized Norcold Service Center.
Temperature setting flashes on/off at one (1) second intervals anytime the user interface (control) is "awake"	The thermistor has been sensed as inoperable, so the temperature is being controlled via backup operating system.	This is not owner serviceable. Please see your dealer or authorized Norcold Service Center.
Blank display	The refrigerator is off or refrigerator will not turn on.	Turn the refrigerator power ON Check: - That the battery charging equipment of the vehicle is operational - That the AC/DC converter is operational (if applicable) - Please see your dealer or authorized Norcold Service Center