INSTRUCTION MANUAL

HK-38 FULL SIZE KEGERATOR



BEFORE USE, PLEASE READ AND FOLLOW ALL SAFETY RULES AND OPERATING INSTRUCTIONS.

Kegco has a policy of continuous improvement on its products and
reserves the right to change materials and specifications without notice

KEGCO

8520 Miralani Dr., San Diego, CA 92126

Table of Contents

Safety Tips 3

Installation Instructions 4

Caster Installation 4

Guardrail Installation 4

Operation Instructions 5

Care and Maintenance 6

Energy Saving Tips 6

Troubleshooting 7

Technical Specifications 8

Energy Guide 9

Warranty Information 10

Safety Tips

Before using this appliance, it must be properly positioned and installed as described in this manual, so please read the manual carefully. To reduce the risk of fire, electrical shock or injury when using the appliance, follow these basic precautions. Failure to heed these safety requirements may result in severe personal injury or death.

⚠ DANGER ⚠

- Plug into a grounded 3-prong outlet. Do not under any circumstances cut or remove the third ground prong from the power cord supplied, do not use an adapter, and do not use an extension cord.
- It is recommended that a separate circuit, serving only your appliance be used. Do not use outlets that can be turned off by a switch or pull chain.
- Never clean appliance parts with flammable fluids and do not store or use gasoline or other flammable vapors and liquids in the vicinity of this or any other appliance. The fumes can create a fire hazard or explosion.
- Unplug the appliance or disconnect power before cleaning or servicing. Failure to do so can result in electrical shock or death.
- Do not attempt to repair or replace any part of your appliance unless it is specifically recommended in this manual. All other servicing should be referred to a qualified technician.

⚠ WARNING ⚠

- Use two or more people to move and install appliance. Failure to do so can result in back or other injury.
- To ensure proper ventilation for your appliance, the front of the unit must be completely unobstructed. Choose a well-ventilated area with temperatures above 50°F (10°C) and below 109.4°F (43°C). Do not install in a location where the unit will be exposed to direct sun exposure as this may result in unsatisfactory performance.
- The appliance should not be located next to ovens, grills or other high heat sources or in areas of extreme cold.
- The appliance must be installed in accordance with state and local codes. A standard electrical supply (115 V AC only, 60 Hz), properly grounded in accordance with the National Electrical Code and local ordinances is required.
- Do not kink or pinch the power supply cord of appliance.
- The fuse (or circuit breaker) size should be 15 amperes.
- It is important for the appliance to be leveled in order to work properly.
- Never allow children to operate, play with or crawl inside the appliance. Child entrapment and suffocation are not just problems of the past, junked or abandoned appliances are still dangerous. When no longer using your old appliance, take off the door and leave the shelves in place so that children may not climb inside easily.
- Do not use solvent-based cleansers or abrasives on the interior as they may damage or discolor the interior.
- Because of potential safety hazards under certain conditions, it is strongly recommended that you do not use an extension cord with this appliance. However, if you must use an extension cord, it is absolutely necessary that it be a UL/CUL-Listed, 3-wire grounding type appliance extension cord having a grounding type plug and outlet and that the electrical rating of the cord be 115 volts and at least 10 amperes.
- If the appliance is going to be used in an area that is prone to power surges/outages, it is suggested that you use a power surge protector. The surge protector that you select must have a surge block high enough to protect the appliance it is connected to. Damages due to power surges are not considered a manufacturer covered defect and will void your product warranty.
- The cord should be secured behind the appliance and not left exposed or dangling to prevent accidental injury. Never unplug the appliance by pulling the power cord. Always grip the plug firmly and pull straight out from the receptacle. Repair or replace immediately all power cords that have become frayed or otherwise damaged. Do not use a cord with cracks or abrasion damage along its length or at either end. When moving the appliance, be careful not to damage the power cord.
- Do not use this apparatus for other than its intended purpose.
- **California Proposition 65 Warning:** This product may contain a substance known to the State of California to cause cancer, birth defects or other reproductive harm.

Failure to heed these safety warnings may result in extensive product damage, serious personal injury, or death.

Installation Instructions

BEFORE USE:

- Remove the exterior and interior packaging, but do not remove any foam insulation surrounding the pipes at the back.
- Before connecting the unit to the power source, let it stand upright for approximately 8 hours. This will reduce the possibility of a malfunction in the cooling system from handling during transportation.
- Clean the interior surface with lukewarm water using a soft cloth.
- Place the unit on a flat, solid floor that is strong enough to support it when it is fully loaded. To level the appliance, adjust the rolling casters at the bottom of the unit.
- When moving your refrigerator, please do not incline it more than 45 degrees.
- Locate the appliance away from direct sunlight and sources of heat (stove, heater, radiator, etc.). Direct sunlight may affect the acrylic coating and heat sources may increase electrical consumption. Extreme cold ambient temperatures may also cause the unit to perform improperly. The optimal ambient temperature range is 50°F – 109.4°F. Do not mount the draft tower remotely, as the exposed beer line will not be refrigerated, causing foam.
- Avoid locating the unit in damp areas.
- Unwind the power cord to its full length and inspect for damage before plugging into the outlet.
- Plug the refrigerator into an exclusive, properly installed and grounded wall outlet. Do not under any circumstances cut or remove the third (ground) prong from the power cord. Any questions concerning power and/or electrical grounding should be directed to a certified electrician or authorized products service center.
- After plugging the appliance into a wall outlet, allow the unit to cool down for 3 to 4 hours before installing a keg in the appliance.

Caster Installation

1. Remove everything from the cabinet and lay the unit on a clean, dry, and padded surface
2. Install casters into the holes on the bottom of the unit as shown and tighten with a wrench

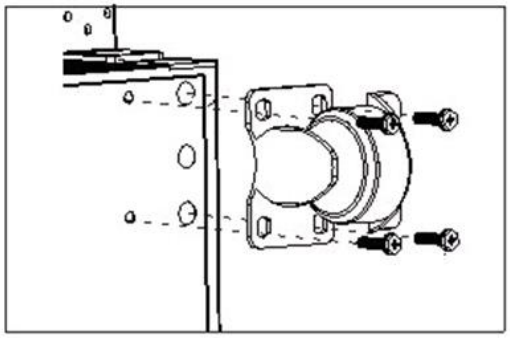

3. The two casters equipped with locks should be installed on the front of the unit
4. Once all four casters are attached, return the beer dispenser to an upright position
5. Allow the unit to sit for 8-10 hours before plugging in to allow the refrigerant to settle

Guardrail Installation

1. Screw the guardrail lugs (1) into the top of the kegerator
2. Install the guardrail posts (2) on the guardrail lugs
3. Using the screws provided (3), fasten the guardrail posts onto the guardrail lugs

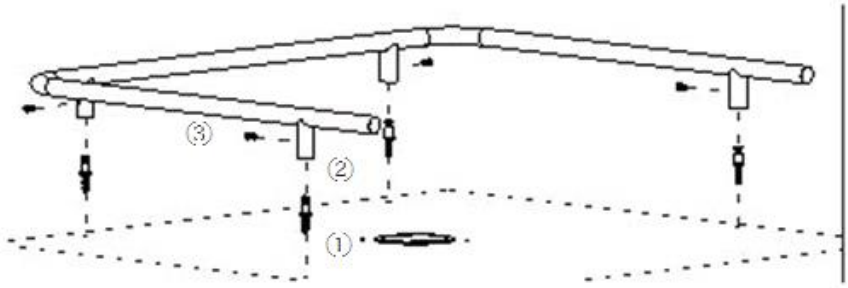

Operation Instructions

The Kegco Kegerator is able to maintain the proper dispensing temperature for beer, provided it is installed correctly in the proper environment. For best results, mount the draft tower as close to the top of the kegerator as possible and seal any openings to prevent heat transfer. Avoid opening and closing the door of the kegerator too often to ensure a consistent temperature inside the unit. Beer is dispensed best between 32-38 degrees Fahrenheit (factory preset temperature is 32 degrees Fahrenheit). If it is kept below or above that range, you may experience foam issues.

The kegerator should be placed in an area where the ambient temperature range is between 50-109.4 degrees Fahrenheit (10-43 degrees Celsius). If the ambient temperature is above or below this range, the performance of the unit may be affected. For example, placing your unit in extreme cold or hot conditions may cause interior temperatures to fluctuate. Please be aware that the desired temperatures may fluctuate depending on the ambient temperature and the orientation of the keg.

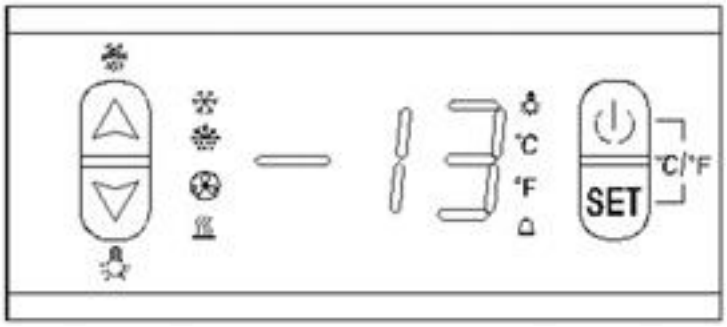

Your Kegco Kegerator includes an operating panel on the front of the unit. The operating panel includes several features to operate and control the temperature of the kegerator, including:

To turn the appliance ON or OFF, press and hold the POWER key for 5 seconds

Press SET to view the set temperature; if no other operations are performed for 6 seconds, the display will return to displaying the actual temperature in the cooler

Press the SET key first and then the UP or DOWN button to increase (warm) or decrease (cool) the set temperature by 1 degree increments

Press and and hold for 6 seconds to change the display from Fahrenheit to Celsius or Celsius to Fahrenheit

Press and hold for 6 seconds to manually defrost the unit; press and hold again to stop defrosting

Press to manually turn the interior light on or off

If you are going on vacation, you may leave the kegerator operating during vacations of less than three weeks. If the appliance will not be used for several months, you should remove all items and turn off the appliance. Clean and dry the interior thoroughly. To prevent mold growth, leave the door open slightly, blocking it open if necessary.

NOTE: Keep a thermometer handy and adjust temperature control settings as necessary according to your needs.

Care and Maintenance

Cleaning your kegerator:

- Turn off the power, unplug the appliance, and remove all items including the dispense kit.
- Wash the inside surfaces with warm water and baking soda solution. The solution should be about 2 tablespoons of baking soda to a quart of water.
- Wring excess water out of the sponge or cloth when cleaning area of the controls, or any electrical parts.
- Wash the outside cabinet with warm water and mild liquid detergent. Rinse and wipe dry with a clean soft cloth.
- Do not use steel wool or a steel brush on the stainless steel. These will contaminate the stainless steel with steel particles and rusting may occur.
- Dust the front grill and back of the unit twice yearly. Make sure the power is off before cleaning.
- It is recommended to clean the unit completely inside and out yearly to maximize the longevity of the product.

Moving your kegerator:

- The provided casters will allow you to roll the appliance from one location to another in your home easily.
- For transportation, remove the keg, the dispense kit and any other items you may have inside the unit.
- Securely tape down all loose items inside your appliance and tape the door shut.
- Be sure the appliance stays secure in the upright position during transportation.
- Protect the outside of the appliance with a blanket or similar item.

Energy Saving Tips

- Place the unit in the coolest area of the room, away from heat-producing appliances and out of direct sunlight
- Let heated items and beverages cool to room temperature before placing them into the appliance
- Do not overload the beer dispenser as it forces the compressor to run longer
- Wrap items properly and wipe containers dry before placing them in the unit to cut down on frost build-up
- Do not line shelves with aluminum foil, wax paper, or paper towels, as liners can interfere with cold air circulation, reducing cooling efficiency
- Position items so that air can circulate freely around them
- Do not leave door open for longer than required
- Make sure items do not touch the back of the storage compartment
- Do not set the thermostat to exceedingly cold temperatures

Troubleshooting

There are many common issues you may experience with your kegerator that can be solved very easily, without the need of a service call. Try the tips below to troubleshoot your unit should you experience any problems:

PROBLEM	POSSIBLE CAUSE
Kegerator does not operate	Not plugged in or the appliance is turned off The circuit breaker tripped or a fuse has blown out
Kegerator is not cold enough	Check the temperature control setting External environment may require a higher setting The door is opened too often The door is not closed completely The door gasket is not sealing properly
Kegerator is turning on and off frequently	The room temperature is hotter than normal. The door is opened too often. The door is not closed completely. The temperature control is not set correctly. The door gasket does not seal properly.
The light does not work	Not plugged in. The circuit breaker tripped or a fuse has blown. The light bulb has burned out. The light button is “OFF”.
Vibrations	Check to assure that the kegerator is on a level surface.
The kegerator seems to make too much noise	A faint humming noise may come from the flow of the refrigerant, which is normal. As each cycle ends, you may hear gurgling sounds caused by the flow of refrigerant in your kegerator. Contraction and expansion of the inside walls may cause popping and crackling noises. During the defrosting process you may hear a water flowing sound caused by water flowing into the drain trough. The kegerator is not on a level surface.
The door will not close properly	The kegerator is not on a level surface. The gasket is dirty. The shelves are out of position.
Smell/odor	Check for spills and for food or drink that is out of date or incorrectly packaged
Outer surface of appliance is wet	Condensation has formed and can be wiped dry
External surface is warm	Compressor is working to transfer heat from inside the cabinet

Technical Specifications

Keg Capacity	One Full-Size Keg **or** Two Quarter Slim Kegs **or** Three 5 Gallon Commercial Kegs **or** Three 5 Gallon Cornelius Home Brew Kegs
Dimensions	34-1/8" H x 24" W x 25" D (without Handle)
Cubic Footage	6.6 Cubic Feet
Weight	115 lbs. (empty)
Voltage / Frequency	110v / 60 Hz
Running Amps	1.0 A
Wattage	85W
Refrigerant	R600a
Operating Temperature	23°F - 59°F
Ambient Temperature	50°F – 109.4°F

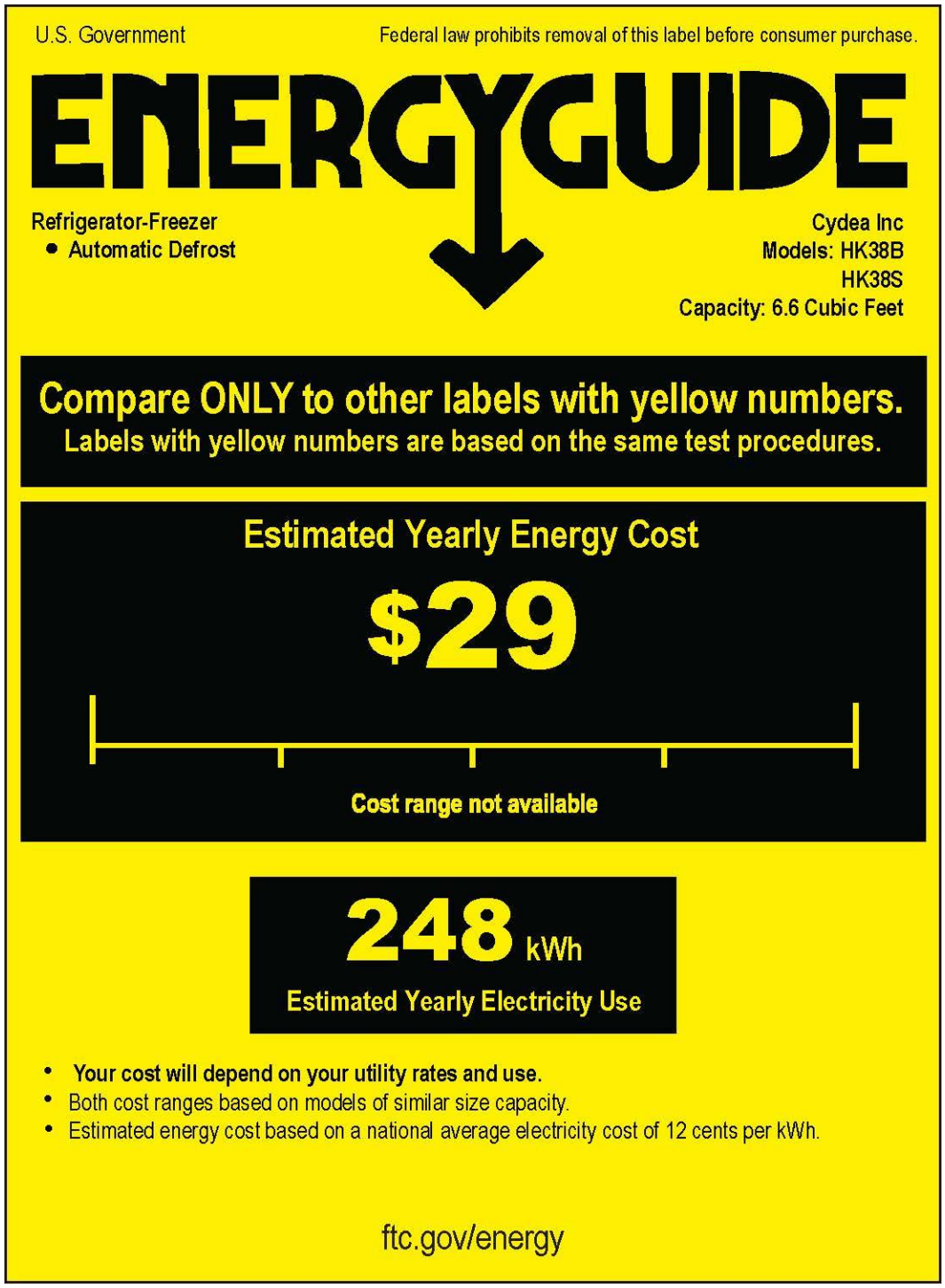
U.S. Government
Federal law prohibits removal of this label before consumer purchase.
ENERGYGUIDE
Refrigerator-Freezer
• Automatic Defrost
Cydea Inc
Models: HK38B
HK38S
Capacity: 6.6 Cubic Feet
Compare ONLY to other labels with yellow numbers.
Labels with yellow numbers are based on the same test procedures.
Estimated Yearly Energy Cost
$29
Cost range not available
248 kWh
Estimated Yearly Electricity Use
• Your cost will depend on your utility rates and use.
• Both cost ranges based on models of similar size capacity.
• Estimated energy cost based on a national average electricity cost of 12 cents per kWh.
ftc.gov/energy

Warranty Information

WHAT IS COVERED LIMITED ONE-YEAR WARRANTY:

For one year from the date of purchase by the original owner, Kegco will, at its option, repair or replace any part of the unit, which proves to be defective in material or workmanship under normal use. During this period Kegco will provide all parts and labor necessary to correct such defects free of charge, so long as the unit has been installed and operated in accordance with the written instructions in this manual. Kegco will provide you with a reasonably similar replacement product that is either new or factory refurbished. In rental or commercial use, the warranty period is 90 days. All Kegco Appliances of 3.5 cubic feet capacity or less must be brought/sent to the appliance service shop for repair.

LIMITED SECOND THROUGH FIFTH YEAR WARRANTY:

For the second through the fifth year from date of original purchase, Kegco Products will provide a replacement compressor free of charge due to a failure. You are responsible for the service labor and freight charges. In rental or commercial use, the limited compressor warranty is one year and nine months. Cost to move the appliance to the servicers' shop and back to the user's home, as may be required, are the user's responsibility.

WHAT IS NOT COVERED:

- Content losses of food or other, due to spoilage.
- Incidental or consequential damages.
- Parts and labor costs for the following will not be considered as warranty:
    - Door springs, and/or frames.
    - Inner door panels, door rails and/or door supports.
    - Light bulbs and/or plastic housing.
    - Plastic cabinet liners.
    - Punctured evaporator that voids the warranty on the complete sealed system.
    - Repairs performed by unauthorized servicers.
    - Shipping and handling costs associated with the replacement of the unit.
    - Service calls that do not involve defects in material or workmanship such as customer education, door reversal, or proper installation.
    - Surcharges including, but not limited to, any after hour, weekend, or holiday service calls, tolls, ferry trip charges, or mileage expense for service call to remote areas, including the State of Alaska.
    - Service calls that are related to external problems, such as abuse, misuse, inadequate electrical power, accidents, fire, floods, or acts of God.
    - Replacement of house fuses or resetting circuit breakers.
- Failure of the product if it is used for other than its intended purpose.
- This warranty does not apply outside the Continental USA.

SERVICE FOR YOUR KEGERATOR:
With the purchase of your Kegco appliance, you can have the confidence that if you ever need additional information or assistance, the Kegco Customer Service team will be here for you. Whatever your questions are about our products, help is available. Just call us toll-free.

KEGCO PRODUCT CUSTOMER SERVICES:
Product Information, Part Orders and In-Home Repair Service: **888-980-4810**