EDGESTAR®

Undercounter Kegerator

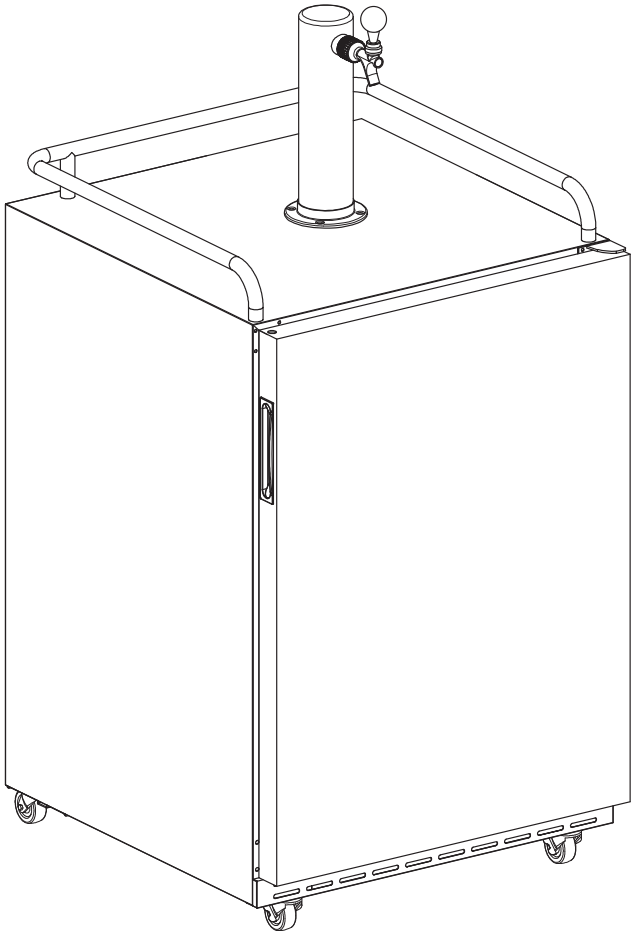

BR7001BL / BR7001SS
BR7001SSOD

Owner's Manual

Important Safety Information

Improper handling can cause serious damage to the EdgeStar kegerator and / or injury to the user. This kegerator is designed for domestic use only. **Do not use the unit for industrial or commercial use.** Any other use may invalidate the warranty. Please review the ratings label located on the rear panel of the unit for electrical and other technical data related to this unit. The unit must be used in a properly grounded wall outlet.

Please read and follow the safety information listed below to reduce the risk of fire, electric shock, or injury.

Electrical Safety

- Do not exceed the power outlet ratings.
- It is recommended the kegerator be connected on its own circuit.
- The unit must be installed in accordance with state and local electrical codes.
- A standard electrical supply (115 V, 60Hz), that is properly grounded in accordance with the National Electrical Code and local codes and ordinances is required.
- Use outlets that cannot be turned off by a switch or pull chain.
- Always turn the unit off and unplug it from the outlet when cleaning.
- Unplug the unit if it is not going to be used for an extended period of time.
- Do not operate the unit with a power plug missing the ground plug, a damaged cord, or a loose socket.
- Be sure the kegerator is properly grounded.
- Avoid installation in high humidity environments such as bathrooms and non-acclimatized basements. Excess moisture may create condensation on the door and impact the performance of the kegerator.
- Never plug or unplug the unit with wet hands.
- Do not bypass, cut, or remove the grounding plug.
- Do not use extension cords or power strips with this unit. You may need to contact your electrician if it is necessary to use a longer cord or if you do not have a grounded outlet. Do not modify the power cord's length or share the outlet with other appliances.
- Do not start or stop the unit by switching the circuit's power on and off.
- If the power cord is damaged, it must be replaced by the manufacturer or a qualified technician.
- Never repair the unit while it is plugged in.
- Immediately unplug the unit if it makes strange sounds, emits smells, or smoke comes out of it, and contact customer service.
- Do not remove any part of the casing unless instructed to do so by an authorized technician.
- You should never attempt to repair the unit yourself. Contact customer service for service options if the unit needs service.

DANGER: Flammable Refrigerant Used! When handling, moving, and using the kegerator, make sure to avoid either damaging the refrigerant tubing or increasing the risk of a leak.

Important Safety Information

⚠ General Safety

- To prevent injuries, use at least two people to move and install the kegerator.
- Install the kegerator in a well-ventilated area where the ambient temperature is above 50° F and below 95° F.
- The temperature range for this kegerator is optimized for storage. Perishable food items may require a different storage environment.
- Do not place hot or warm items into the kegerator before they cool down to room temperature.
- This unit is designed to be installed indoors, and protected from rain, sleet, snow, and / or moisture.
- This unit is not intended to be used by children.
- Children should be supervised to ensure that they do not play with this product.
- Never allow children to crawl inside the kegerator. If you are disposing of the unit, remove the door.
- Do not use this appliance near flammable gas or combustibles such as gasoline, benzene, or thinner.
- Do not store explosive substances such as aerosol cans with flammable propellant in this appliance.
- Do not place the unit near heat sources such as ovens, grills, or direct sunlight.
- Only use in an upright position on a flat, level surface and provide proper ventilation.
- Do not pinch or kink the power supply line between the unit and cabinet.
- Do not leave any cleaning solutions in the unit.
- Do not use solvent-based cleaning agents or abrasive solutions to clean the unit as they may damage the interior and exterior.
- Do not place any other appliances on top of the unit.
- Do not turn the unit upside down, on its side, or at an angle off level.
- If your model of kegerator is equipped with a lock, keep the keys away from children.
- Do not move the unit without emptying the contents and securing the door in a closed position.
- This appliance is not intended for use by persons (including children) with reduced physical, sensory, or mental capabilities unless they are given supervision or instruction by a person responsible for their safety.
- This appliance is meant for use in the household or similar settings.
- Keep all ventilation openings clear of obstruction.
- Do not use mechanical devices or other means to accelerate the defrosting process.
- Do not damage the refrigerant circuit.
- Do not use other appliances inside the kegerator unless recommended by the manufacturer.
- If the power cord is damaged, it must be replaced by the manufacturer, its service agent, or a similarly

⚠ **DISPOSAL:** This appliance may not be treated as regular household waste, it should be taken to the appropriate waste collection

Table of Contents

Important Safety Information 2
First-Time Operating Instructions 5
Introduction 5
Parts Identification 6
Installation 8
- Unpacking the Kegerator 8
- Types of Installation 8
- Countertop Opening for Dispense Kit 9
- Clearance Requirements 10
- Seal Space Between Cabinet and Countertop 11
- Electrical Requirements 12
- Recommended Grounding Method 12
- Leveling the Kegerator 12
- Installing the Door Handle 13
- Installing the Guard Rail 13
- Installing the Drip Tray 13
- Installing the Casters 14
- Reversing the Door Swing 14
- Keg Loading 16

Operation 17
- Installation Checklist before Operation 17
- Using the Temperature Control Panel 17
- Normal Sounds 18
- Temperature Alarm 18
- Door Ajar Alarm 18
- Defrosting 19
- Preparing the Kegerator for Storage 19

Cleaning and Maintenance 19
Troubleshooting 20
Specifications 22
EdgeStar Limited Warranty 23

First-Time Operating Instructions

Before use, make sure all packaging labels and materials are removed from the unit. Be sure to keep track of all included parts and pieces before discarding the packaging materials. It is advised that you keep the original box and packaging materials in case you ever need to move or ship the appliance in the future.

Let the unit stand for at least 24 hours before you use it; this allows the cooling components time to settle from transit. The instruction manual should be read before use.

Introduction

Thank you for purchasing this EdgeStar kegerator. We hope that this purchase will be the beginning of a lasting and rewarding relationship between you and EdgeStar. We will provide the customer support and exemplary products necessary to nurture that relationship.
This manual contains important information regarding the proper installation, use, and maintenance of your kegerator. Following this manual will ensure that your product will work at its peak performance and efficiency.

Please save the original product packaging in case you need to safely transport your kegerator.

For Your Records:
Please write down the model number and serial number below for future reference. Both numbers are located on the ratings label on the back of your unit and are needed to obtain warranty service. You may also want to staple your receipt to this manual as it is the proof of your purchase, and is also needed for service under your warranty.

Model Number: _____

Serial Number: _____

Date of Purchase: _____

For a more efficient experience, please do the following before contacting customer service:

- If you received a damaged product, immediately contact the retailer or dealer who sold the product.
- Read and follow this instruction manual carefully to help you install, use, and maintain your kegerator.
- Read the troubleshooting section of this manual. It will help you diagnose and solve common issues.
- Visit us on the web at www.edgestar.com to register your product, download product guides, and access additional troubleshooting resources and up-to-date information.
- For warranty service, customer service representatives are available at **service@edgestar.com.**

Parts Identification

Note: Gather the model and serial number from the product label and write them down before installing the kegerator.

Front View:

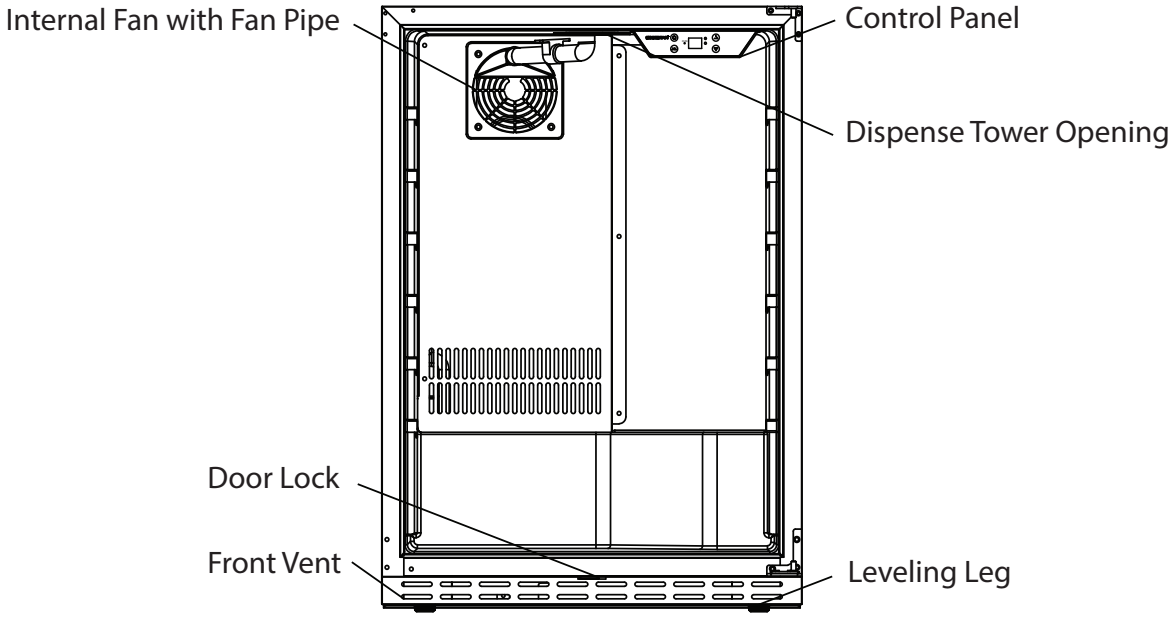

Rear View:

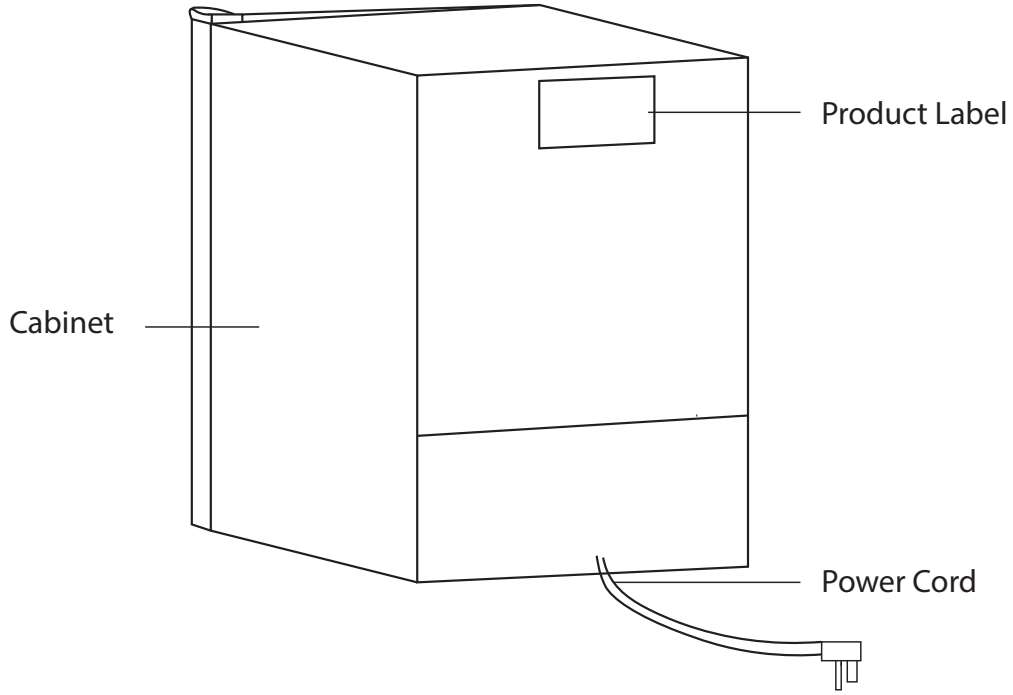

Internal Fan:

This is an air-cooled unit equipped with an internal fan that maintains a consistent internal temperature.

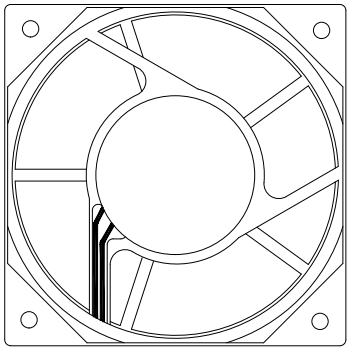

Accessories:

(1) Drip Tray

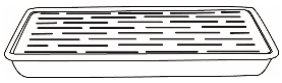

(1) Guard Rail

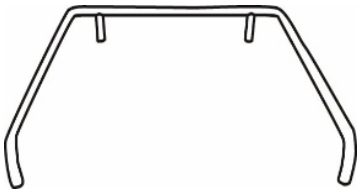

(4) Guard Rail Installation Pegs



(1) Door Handle
(Not included with BR7001BL)



(4) Casters
(Includes 16 screws for installation)



(4) Dispense Tower Screws

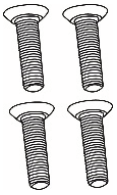

Installation

The kegerator should be installed in accordance with local electrical code requirements. The kegerator should also be placed in a location that is strong enough to support its total weight, keeping in mind that it will weigh substantially more when fully loaded than when empty. **Before you plug the kegerator into a power supply, be sure to let it stand upright for at least 24 hours to allow the compressor's oils to settle.**

Unpacking the Kegerator

> ⚠ **Warning:** Use two or more people to move and install the kegerator. Failure to do so can result in back or other injury. Carefully remove the packaging materials. Remove any shipping tape and glue from your kegerator before use. Do not use sharp instruments, rubbing alcohol, flammable fluids, or abrasive cleaners to remove tape or glue. These products can damage the surface of your kegerator.

> ⚠ **Warning:** Do not remove any safety, warning, or product information labels from your kegerator.

Types of Installation

This kegerator has been designed for freestanding or built-in installation. In each case, there must be adequate ventilation and access for service.

Freestanding Installation:

A freestanding installation will allow you to install the kegerator in almost any place you desire. You must follow the stated instructions for electrical requirements and leveling the kegerator.

Built-in Installation:

A built-in installation will allow you to install the kegerator under a counter as long as the required clearance space around the kegerator is provided. It is necessary to allow adequate ventilation space around the unit, including at the back of the unit.

This installation requires several more steps and considerations than a free standing installation.

> ✎ **Note:** Please refer to the dispense kit installation guide to complete the full assembly of the kegerator.

> ⚠ **Warning:** DO NOT install the kegerator behind a closed cabinet door.

Countertop Opening for Dispense Kit

Notes:

- Choose a location that has ambient temperatures above 50° F and below 95° F. Operation outside these temperatures may result in lowered efficiency or cause other adverse effects.
- This unit MUST be installed in an area protected from the elements, e.g. wind, rain, water spray or drips.
- The kegerator should not be located next to ovens, grills, or other heat sources.
- Do not kink or pinch the power supply cord between the kegerator and the wall or cabinet.

Once the location of the kegerator installation is determined the first step is to create an opening in the counter for the dispense kit lines to pass through.

1. Mark off a spot on the countertop where the opening will be created.
2. Align that spot so it will be directly above the opening of the kegerator that will be placed under the counter.
3. Drill or cut (depending on the material of your countertop) an opening into your counter the same size as the opening of the top of the kegerator.
4. Confirm that the opening is not larger than the size of the dispense tower for optimal performance.

Clearance Requirements

Make sure the top cover, guard rail, drip tray, and installation pegs are NOT installed on the top of the cabinet. These items will create an obstacle for the cabinet to be installed under counter. Move the kegerator so the opening on the top of the cabinet is aligned with the opening in the counter.

When installing the kegerator under a counter, follow the recommended spacing dimensions shown below:

To ensure proper service access and ventilation, allow at least 1-2” of clearance at the back, $^{1}/_{2}$” at the top, and $^{1}/_{4}$” at the sides. If the door side is against a wall, allow at least 2 $^{3}/_{8}$” of clearance. The installation should allow the unit to be pulled forward for servicing, if necessary.

Top View:

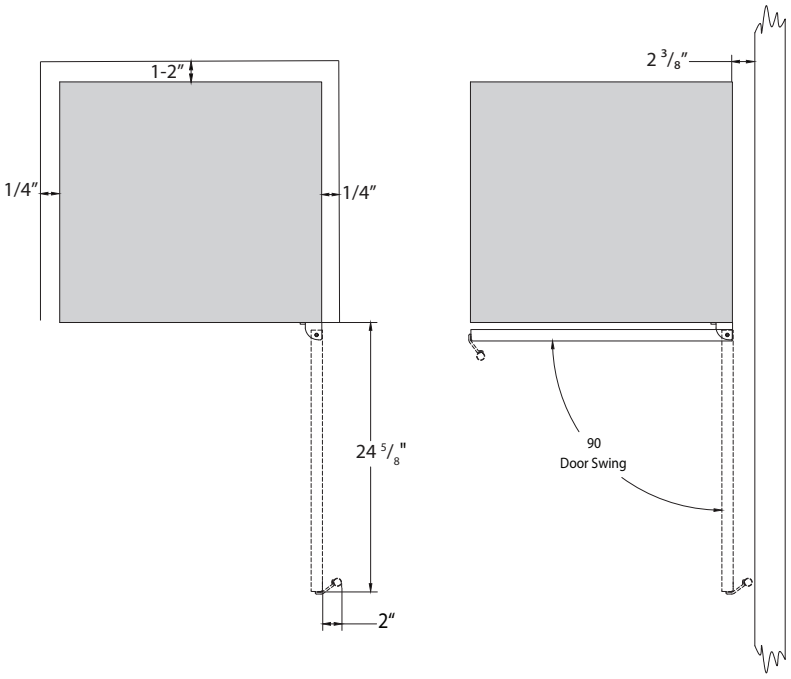

Side View:

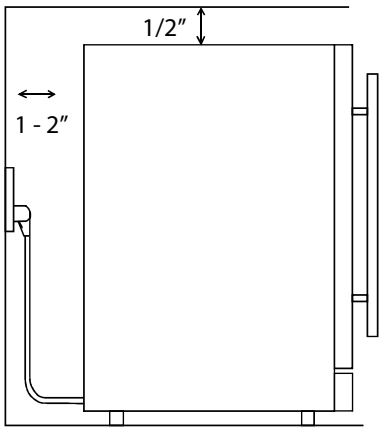

Note: The kegerator should be installed on a firm and level surface that will be able to support the entire weight of a fully loaded unit. It is important for the kegerator to be level in order to work properly. If needed, you can adjust the height of the kegerator by rotating the feet. See the “Leveling the Kegerator” section.

Note: A standard electrical supply (115V AC only, 60 Hz), properly grounded in accordance with National Electrical Code and local codes and ordinances, is required.

Seal Space Between Cabinet and Countertop

Once the cabinet is installed and the two openings of the cabinet and countertop are aligned, you must seal off the open space that will be created above the kegerator cabinet and under the countertop. If this open space is not properly sealed, the cabinet will lose its cold air and allow warm air to enter. Similarly to leaving the kegerator door open, an improper seal can result in kegerator performance issues such as temperature inconsistency, foam problems, and excessive frost build up in certain cases.

To close the opening you will need to run a short connecting tube from the cabinet to the countertop. There is not an accessory included for this connection with the unit. Common materials for this connection include PVC pipe, insulated pipe tubing, or rubber lining material. It is important to form a seal between the kegerator cabinet opening and the bottom surface of the countertop. If you use PVC or foam tubing, your sealing apparatus may extend from the interior of the kegerator cabinet up through the countertop and into the base of the faucet tower.

Note: This installation tip applies to front vented, built-in capable kegerator models only. Improper installation of a kegerator that is not intended for a built in application will result in damage to your appliance.

Correct Installation

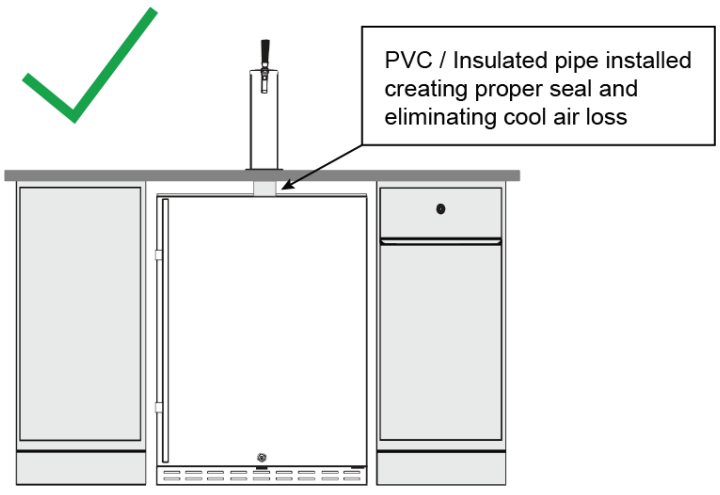

Incorrect Installation

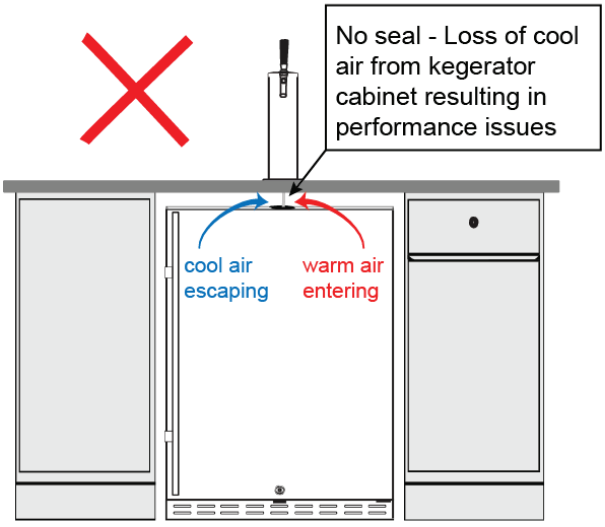

Electrical Requirements

ELECTRIC SHOCK HAZARD!
- Plug into a grounded 3-prong outlet.
- Never remove the grounding prong from the plug.
- Never use an adapter to bypass the grounding prong.
- DO NOT use an extension cord.
- Failure to follow these instructions can result in fire, electrical shock, or death.

Before you move your Kegerator into its final location, it is important to make sure you have the proper electrical connection:

A standard electrical supply (115 V, 60Hz), properly grounded in accordance with the National Electrical Code and local codes and ordinances is required.

It is recommended that a separate circuit, serving only your kegerator, be provided. Use receptacles that cannot be turned off by a switch or pull chain.

The fuse (or circuit breaker) size should be 15 Amps.

Recommended Grounding Method

For your personal safety, this appliance must be grounded. It is equipped with a power supply cord that has a 3-pronged grounding plug. To minimize possible shock hazard, the cord must be plugged into a mating 3-pronged wall socket and grounded in accordance with the National Electrical Code and local codes and ordinances. If a mating wall socket is not available, it is the personal responsibility of the customer to have a properly grounded, 3-prong wall receptacle installed by a qualified electrician.

Leveling the Kegerator

It is important for the kegerator to be level in order to work properly. It can be raised or lowered by rotating the plastic sheaths around each of the feet on the bottom of the machine. If you find that the surface is not level, rotate the feet until the kegerator becomes level. You may need to make several adjustments to level it. We recommend using a carpenter's level to check the machine.

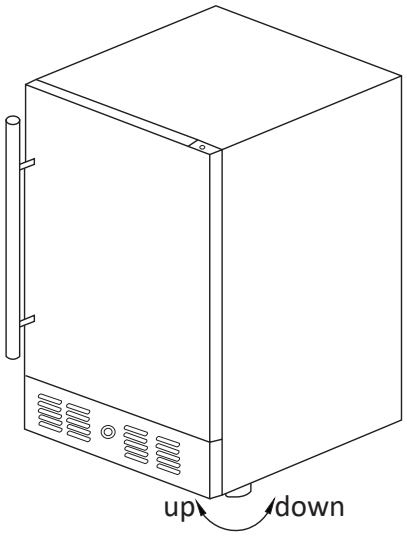

1. Place a carpenter's level on top of the product to see if the kegerator is level from front to back and side to side.
2. Adjust the height of the feet as follows:
Turn the leveling feet to the right to lower that side of the kegerator.
Turn the leveling feet to the left to raise that side of the kegerator.

Note: Once you are ready to install the unit in a cabinet or directly on the floor, you must adjust the feet to level the kegerator.

Installing the Door Handle

To install the door handle:

1. Remove the four screws from the side of the door. This should be the side opposite of the door hinge.
2. Place and align the openings of the handle hinges over the screw holes in the side of the door.
3. Insert and tighten the screws to hold the handle in place.

Warning: Do not over-tighten the screws as this may cause damage to the handle or the stainless steel door.

Installing the Guard Rail

The guard rail helps to hold glasses on top of the cabinet in order to prevent spills and broken glass.
To install the guard rail:

1. Insert the four installation pegs on the outer edges of the top of the cabinet.
2. Place the guard rail onto the four installation pegs. You may need to push down on the guard rail to ensure the rail has clicked into place on the pegs.
3. Screw the four small guard rail screws into the guard rail. This will lock the rail into position.



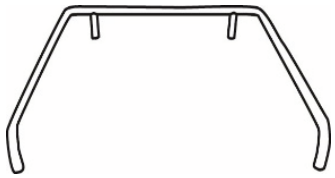

Installing the Drip Tray

The surface mount drip tray is a reservoir designed to collect any runoff liquid from overfilled glasses, leaking faucets, or spills. There are two pieces included for this tray. Place it on top of the cabinet (or countertop) and position under the faucet(s).



Installing the Casters

This unit comes with four (4) casters. These are an optional accessary to assemble if you would like to make the unit more mobile. To install the casters:

1. Remove the four leveling legs from the bottom of the unit.
2. Separate the front casters and back casters. The front casters have a lever for a brake lock.
3. Place the top plate of the caster over the area of the removed leveling leg and align the opening to the screw hole openings.
4. Insert the screws to attach the caster to the cabinet.
5. Make sure the screws are tight so the caster is installed firmly.

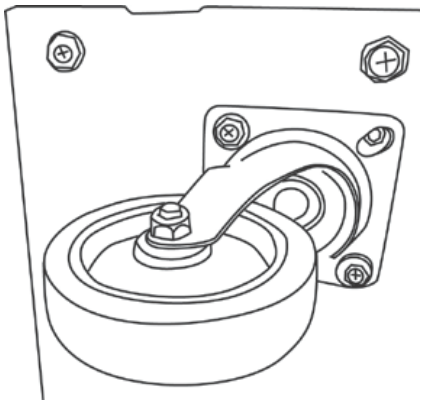

Reversing the Door Swing

Warning: Before you begin, unplug the Kegerator.

1. Open the door and using a Phillips screwdriver, remove the bottom screws from the lower hinge.
2. Carefully slide the bottom of the door forward and down, and place it on a padded surface to prevent damage.

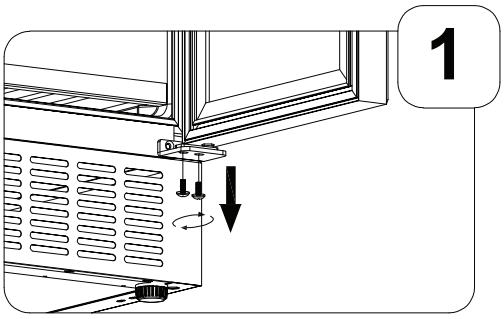

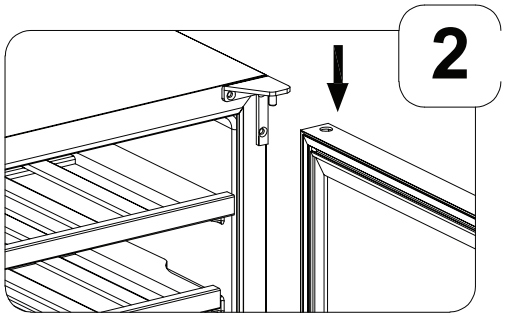

3. Remove the screws from the upper right hinge. Place the upper right hinge in a safe place in case you need to reverse the door in the future. Remove the plastic caps from the upper left hinge corner. Install the upper left hinge by fastening the screws through the left hinge to the cabinet. Insert the plastic caps into the upper right corner.
4. Remove the bottom right support bracket. Remove the plastic caps from the bottom left hinge corner. Insert the plastic caps into the bottom right corner. Install the bottom left support bracket from the plastic bag that was included with the instruction manual.

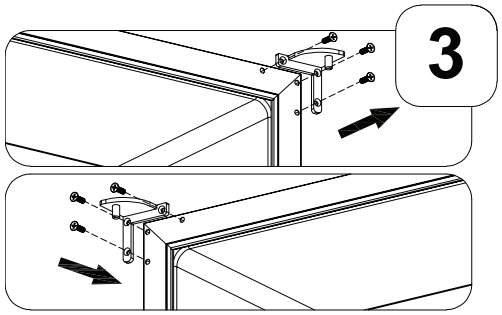

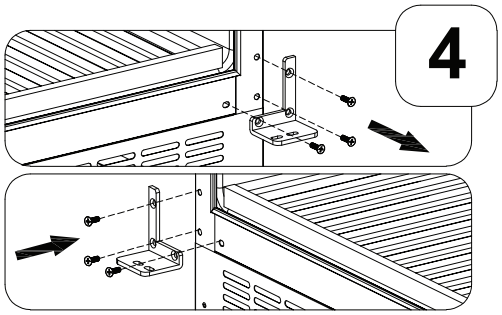

5. Carefully insert the door into the upper left corner hinge. Install the lower hinge on the left corner of the door.
6. Slide the door on top of the lower hinge and secure the door by installing the lower screws.

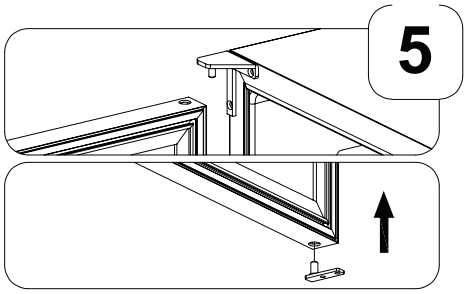

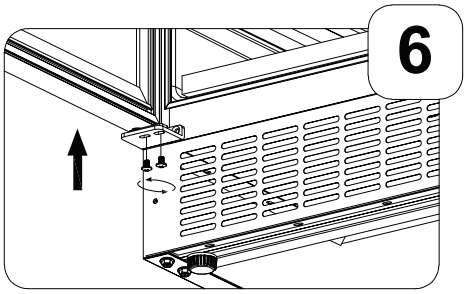

Keg Loading

- Half Barrel Keg
- 5 lb. CO2 tank
- Double Gauge Regulator

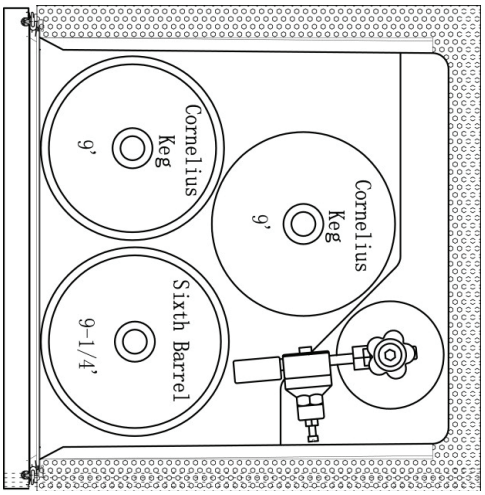

- Slim Quarter Keg
- Sixth Barrel Keg
- 5 lb. CO2 tank
- Double Gauge Regulator

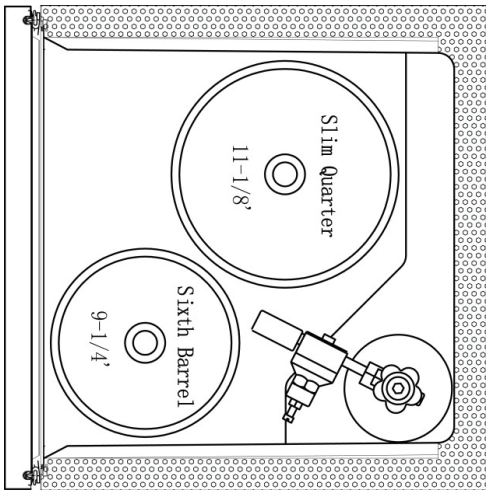

- Three Sixth Barrel Kegs
- 5 lb. CO2 tank
- Double Gauge Regulator

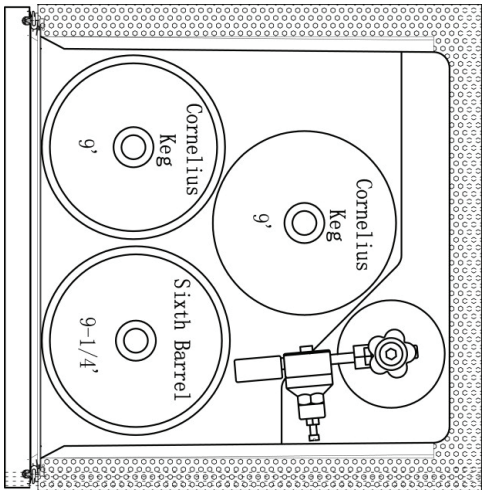

Operation

Installation Checklist before Operation

1. Have all packing materials and tape been removed from the interior and exterior of the kegerator?
2. Have the installation instructions been followed, including connecting the machine to electricity? And has proper grounding been installed for the kegerator?
3. Has the machine been leveled?
4. Is the kegerator in a site where the ambient temperature is between 50° F and 90° F all year round?
5. Is there a clearance of at least 1- 2” at the rear, 1/2” at the top, and 1/4” at the sides for proper air circulation?

Using the Temperature Control Panel

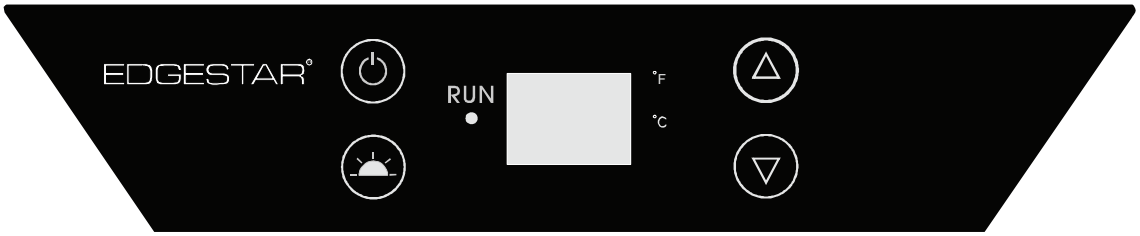

The kegerator has a temperature range from 32°F to 60°F and will display the set temperature.

Power Button: Press and hold for approximately 3 seconds to turn the unit on or off.

Up Button: Press to increase the temperature by 1 degree increments.

Down Button: Press to decrease the tempreature by 1 degree increments.

Run Light: When lit, the unit is in cooling mode.

Light Button: Press the button to turn the inner light on or off.

Celsius/Fahrenheit Light: The Celcius or Fahrenheit light will be lit depending on which temperature type is being displayed. To switch between C and F press and hold both the Up and Down buttons simultaneously for approximately 3 seconds. A beep will occur and the indicator light will illuminate next to desired temperature setting.

Note: The kegerator is equipped with a temperature memory function. If power is suddenly lost, the previously set temperature will be saved and the Kegerator will return to this setting once power is restored. Allow at least 24 hours before storing your items to allow the setting temperature to be reached.

Caution: If you turned the unit off, please wait at least 5 minutes before turning it back on.

Normal Sounds

Your new kegerator may make noise during normal operation. Most of these sounds are normal. Hard surfaces like the floor and walls can make sounds seem louder than they actually are.

The following describes several sounds you may hear and what may be making them:

• Rattling noises may come from the flow of the refrigerant or the water line. Items stored on top of the kegerator can also make noises.
• The high efficiency compressor may make a pulsating or high-pitched sound.
• Water running from the evaporator to the water bin may make a splashing sound.
• As each cycle ends, you may hear a gurgling sound due to the refrigerant flowing in your kegerator.
• You may hear air being forced over the condenser by the condenser fan.

Temperature Alarm

If the interior temperature is higher than 73°F (23°C), “HI” is shown on the temperature control panel and the temperature alarm will sound continuously after one hour. This indicates that the inner temperature is too high. If the inner temperature is lower than 23°F (-5°C), “LO” is shown on the temperature display panel and the temperature alarm will sound continuously after one hour. If one of these situations occurs please reference the troubleshooting section found in this manual or contact EdgeStar for support.

Warning:
• Do not touch the power plug when your hands are wet.
• Never unplug the unit by pulling on the cord.

Defrosting

Note that under most refrigerating settings, the unit will automatically defrost in most ambient conditions. However, on colder settings, some frost may build up. Additionally, the more humid the ambient conditions, the more frost may build up. Keep the door closed as much as possible and avoid opening the door unnecessarily to minimize frost build-up. If frost is preventing the door from closing properly, you may need to power the unit off until the frost melts. Use a soft absorbent towel to dry the unit.

Warning: Never attempt to remove frost with a sharp object!

Preparing the Kegerator for Storage

If the kegerator will not be used for a long time, or is to be moved to another place, it will be necessary to defrost the unit and dry the interior.

1. Disconnect the Kegerator from the power supply by removing the power plug from the wall socket.
2. Leave the door open to allow for air circulation and to prevent mold, mildew, and unpleasant smells.

Caution: Store the unit out of reach from children. If you have children, you may want to take precautions such as removing the door to prevent a child from being trapped inside.

Cleaning and Maintenance

Periodic cleaning and proper maintenance will ensure efficiency, top performance, and long life.

Exterior Cleaning

The door and cabinet may be cleaned with a mild detergent or hand soap mixed with warm water. Do not use solvent based or abrasive cleaners. Use a soft sponge and rinse with clean water. Wipe with a soft clean towel to prevent water spotting. If the door panel is stainless steel, it can discolor when exposed to chlorine gas and moisture. Clean stainless steel using a cloth dampened with a mild detergent and warm water solution. Never use an abrasive or caustic cleaning agent.

Interior Cleaning

The kegerator’s interior should be cleaned occasionally.

1. Disconnect power to the unit.
2. Open the door and remove the contents and shelves.
3. Wait until the unit defrosts.
4. With a clean cloth, wipe down the interior of the unit.
5. Reinsert the shelves and items.
6. Reconnect power to the unit.

Troubleshooting

Before Calling for Help:

If the unit appears to be malfunctioning, read through the “Operation” section of this manual first. If the problem persists, check the Troubleshooting Guide below and on the following page. The problem may be something that can easily be solved or explained.

Symptoms	Possible Causes	Solutions
The kegerator turns on and off frequently.	The room temperature is higher than the recommended ambient environment.	Run the kegerator at the appropriate ambient temperature.
	The door is being opened too often.	Minimize the number of times the door is opened.
	The door is not completely closed.	Make sure the door is completely closed.
	The door gasket is not sealing properly.	Make sure the door gasket is sealing properly.
	The kegerator does not have the suggested ventilation.	Read and follow the “Installation Clearance Requirements” section.
The kegerator does not turn on.	There is a power failure.	Ensure that the kegerator is plugged in and the power outlet has power.
	The kegerator is not plugged in.	Plug the unit in to a power outlet that has sufficient amperage.
	A house fuse has blown or the circuit breaker is tripped.	Replace the broken fuse in your fuse box or reset the breaker.
The kegerator will not reach the desired temperature.	The kegerator is placed too close to a heat source.	Keep the kegerator away from direct sunlight or other heat sources.
	The kegerator does not have sufficient ventilation.	Read and follow the “Installation Clearance Requirements” section.
	The door is opened too frequently or for a long period of time.	Close the door tightly and do not open the door too frequently or for a long period of time.
The kegerator is making strange noises.	Certain sounds are normal.	Read the “Normal Sounds” section.
	The unit is not level or is touching another appliance.	Check to make sure that the kegerator is level, and that it is not in contact with another appliance or furniture.
The body of the kegerator is electrified.	The unit is not grounded properly.	Contact your local electrician to test your electrical grounding system.

Symptoms	Possible Causes	Solutions
Frost is forming in the kegerator.	The space between the top of the kegerator and bottom of the countertop is not sealed properly.	Reference the “Enclose Space Between Cabinet and Countertop” section in this manual.
	The environment is humid.	Manual defrosting is required; unplug the unit to allow the frost to melt. If frost builds up frequently, you can move the unit to a location with a warmer temperature, minimize the number of times you open the door, or check the door gasket for a good seal.
	The ambient temperature is too low.	
	The door gasket is not installed properly.	
	The door is being opened too frequently.	
The door will not shut properly.	The kegerator is not level.	Make sure the kegerator is on a level surface.
	The door gasket is dirty.	Clean the door gasket.
	The door gasket is not installed correctly.	Make sure the door gasket is correctly installed.
	The shelves are incorrectly installed.	Install the shelves correctly.

Specifications

Note: Technical data and performance information are provided for reference only. Specifications are subject to change. Check the rating label on the kegerator for the most accurate information.

Product Type	Undercounter Kegerator
Model	**BR7001BL / BR7001SS / BR7001SSOD**
Voltage / Frequency	AC 115V~60Hz
Amperage	1.5
Color	Black Cabinet; Black Powder Coated Stainless Steel Door (BR7001BL) Black Cabinet; Stainless Steel Door (BR7001SS) Stainless Steel cabinet; Stainless Steel Door (BR7001SSOD)
Refrigerant	R600a, 1.23 oz.
Temperature Range	32°F - 60°F
Dimensions (Height x Width x Depth)	34 ³/₈" X 23 $^{13}/_{16}$" X 27 ³/₈"

Note: The depth indicated includes the product handle. Depth without the handle is 25 $^{3}/_{8}$". A handle is not included with the BR7001BL.

EdgeStar Limited Warranty

One (1) Year Parts & One (1) Year Labor

This product is warranted by EdgeStar and is subject to any conditions set forth as follows:

WHAT IS COVERED:

LABOR: For a period of ONE (1) YEAR from the date of original purchase, labor will be performed free of charge at an authorized EdgeStar repair facility. At its option, EdgeStar will repair the product with new or remanufactured parts, or exchange the defective product with a new, refurbished, or remanufactured product. If a product is replaced, it will carry the remaining warranty of the original product. After the one (1) year period, EdgeStar will no longer be responsible for labor charges incurred. All defective products and parts covered by this warranty will be repaired or replaced on a mail-in basis to an EdgeStar authorized repair facility.

PARTS: For a period of ONE (1) YEAR from the date of original purchase, EdgeStar will supply new, rebuilt, or refurbished parts free of charge. EdgeStar may request a defective part be returned in exchange for the replacement part. All replacement parts or products will be new, remanufactured, or refurbished. All products and parts replaced by EdgeStar under warranty service become the property of EdgeStar.

This warranty applies to the original purchaser only, and only covers defects in workmanship experienced during operation of the product under normal service, maintenance, and usage conditions. This warranty applies to the purchase and use of this product in residential settings within the contiguous United States of America.

WHAT IS NOT COVERED- The following limitations apply to the coverage of this warranty. This warranty does not cover:

- Labor charges for installation, setup or training to use the product.
- Shipping damage, and any damage caused by improper packaging for shipment to an authorized service center, and any damaged caused by improper voltage or any other misuse, including abnormal service, handling, or usage.
- Cosmetic damage such as scratches and dents.
- Normal wear and tear on parts or replacement of parts designed to be replaced, e.g. filters, cartridges, batteries.
- Service trips to deliver, pick-up, or repair, install the product, or to instruct in proper usage of the product.
- Damages or operating problems resulting from misuse, abuse, operation outside environmental specifications, uses contrary to instructions provided in the owner's manual, accidents, acts of God, vermin, fire, flood, improper installation, unauthorized service, maintenance negligence, unauthorized installation or modification, or rental or commercial use.
- Labor, service transportation, and shipping charges incurred 91 days or more after the date of original purchase.
- The use of EdgeStar products in commercial or rental settings.
- Optional accessories, attachments, and appearance items.
- Products that have been modified to perform outside of specifications without the prior written permission of EdgeStar.
- Products lost in shipment, or theft.
- Products sold AS IS or from an unauthorized reseller.
- Products that have had their serial numbers removed or defaced. Products with serial numbers that have been invalidated.
- Damage to personal property from use of product.
- Replacement of repair of household fuses, circuit breakers, wiring, or plumbing.

OBTAINING WARRANTY SERVICE: If you believe your product is defective, contact EdgeStar Customer Support for troubleshooting assistance and warranty service at www.edgestar.com or call 1-866-319-5473. Before contacting Customer Support you are required to have your model number, serial number, and proof of purchase available upon request. Once an EdgeStar authorized representative has confirmed that your product is defective and eligible for warranty service, the product must be returned to an EdgeStar authorized repair facility. EdgeStar is not responsible for damage resulting from shipper mishandling or improper packaging. Do not return a defective product to the place of purchase. Products received without a return authorization number will be refused.

THIS WARRANTY IS IN LIEU OF ANY OTHER WARRANTY, EXPRESS OR IMPLIED, INCLUDING WITHOUT LIMITATION, ANY WARRANTY OF MERCHANTABILITY OR FITNESS FOR A PARTICULAR PURPOSE. TO THE EXTENT ANY IMPLIED WARRANTY IS REQUIRED BY LAW, IT IS LIMITED IN DURATION TO THE EXPRESS WARRANTY PERIOD ABOVE. NEITHER THE MANUFACTURER NOR ITS DISTRIBUTORS SHALL BE LIABLE FOR ANY INCIDENTAL, CONSEQUENTIAL, INDIRECT, SPECIAL, OR PUNITIVE DAMAGES OF ANY NATURE, INCLUDING WITHOUT LIMITATION, LOST REVENUES OR PROFITS, OR ANY OTHER DAMAGE WHETHER BASED IN CONTRACT, TORT, OR OTHERWISE. IN NO EVENT AND UNDER NO CIRCUMSTANCE OF ANY TYPE OR KIND SHALL THE SELLER, MANUFACTURER AND/OR DISTRIBUTOR BE LIABLE FOR ANY REASON, UNDER ANY THEORY, FOR MORE THAN THE BASIC COST OF THE PRODUCT TO THE PURCHASER OR END USER. SOME STATES DO NOT ALLOW THE EXCLUSION OF INCIDENTAL OR CONSEQUENTIAL DAMAGES, SO THE ABOVE EXCLUSION MAY NOT APPLY TO YOU. THIS WARRANTY GIVES YOU SPECIFIC LEGAL RIGHTS. YOU MAY HAVE OTHER RIGHTS THAT VARY FROM STATE TO STATE.

EDGESTAR®

©2022 EdgeStar