UNDERCOUNTER ICE MAKER

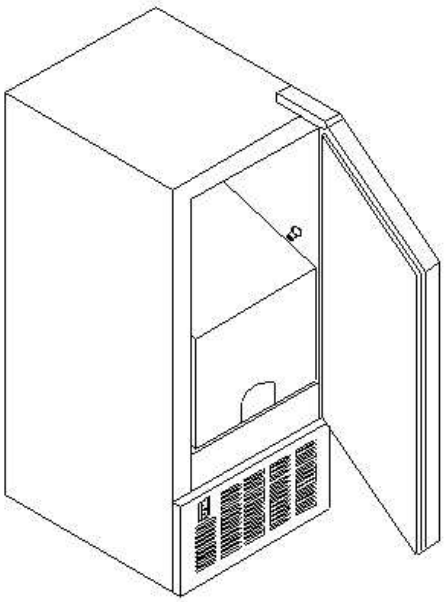

Model #: IM-600US

INSTRUCTION MANUAL

Be sure to stand the icemaker upright for at least 24 hours prior to plugging it in.

Installation by a licensed plumber only.

Improper water line connection may result in flooding.

TABLE OF CONTENTS

Page

ICE MAKER SAFETY ……2

ELECTRICAL CONNECTION ..……....2

SAFETY PRECAUTIONS ……..3

TECHNICAL INFORMATION ……..3

COMPONENTS ……..…….…… ..4

INSTALLATION INSTRUCTIONS ……5-7
Location requirements
Installation
Reversing the door
Connecting the water supply
Installation types

OPERATING YOUR ICEMAKER……..…8-10
Operation checklist
Operation of the icemaker
Understanding the icemaker
Control box

CARE AND MAINTENANCE ……..…….……10-12
Cleaning your icemaker
Power failure
Vacation time and storage
Moving your icemaker

TROUBLESHOOTING ……..……..12

This owner's manual is provided for reference only. Specifications may change without prior notice. You can always check the back label of your icemaker for the most updated technical information.

⚠ **WARNING** ⚠	FOLLOW THESE BASIC PRECAUTIONS TO REDUCE THE RISK OF FIRE, ELECTRICAL SHOCK, OR INJURY WHEN USING YOUR ICE MAKER.

- READ ALL INSTRUCTIONS BEFORE USING THE ICE MAKER.
- **DANGER**: RISK OF CHILD ENTRAPMENT.
  CHILD ENTRAPMENT AND SUFFOCATION ARE NOT PROBLEMS OF THE PAST.
  JUNKED OR ABANDONED APPLIANCES ARE STILL DANGEROUS.
- **BEFORE YOU THROW AWAY YOUR ICE MAKER:** TAKE OFF THE DOOR.
- NEVER ALLOW CHILDREN TO OPERATE, PLAY WITH, OR CRAWL INSIDE THE APPLIANCE.
- NEVER CLEAN ICE MAKER PARTS WITH FLAMMABLE FLUIDS. THE FUMES CAN CREATE A FIRE HAZARD OR EXPLOSION.
- DO NOT STORE OR USE GASOLINE OR ANY OTHER FLAMMABLE VAPORS AND LIQUIDS IN THE VICINITY OF THIS OR ANY OTHER APPLIANCE. THE FUMES CAN CREATE A FIRE HAZARD OR EXPLOSION.

IMPORTANT SAFETY INSTRUCTIONS

WARNING: To reduce the risk of fire, electric shock or injury when using your icemaker, follow these basic precautions:

- Disconnect power before cleaning.
- Replace all panels before operating.
- Do not use an extension cord.
- Disconnect power before servicing.
- Do not use an adapter.
- Have two or more people to move/install the icemaker.]

➢ ELECTRICAL CONNECTION

⚠ **WARNING** ⚠

IMPROPER USE OF THE GROUNDED PLUG CAN RESULT IN THE RISK OF ELECTRICAL SHOCK. IF THE POWER CORD IS DAMAGED, HAVE IT REPLACED BY AN AUTHORIZED TECHNICIAN.

- This icemaker should be properly grounded for your safety. The power cord of this icemaker is equipped with a three-prong plug which mates with standard three prong wall outlets to minimize the possibility of electrical shock.
- DO NOT UNDER ANY CIRCUMSTANCES CUT OR REMOVE THE THIRD GROUNDING PRONG FROM THE SUPPLIED POWER CORD.
- Do not use an adapter and do not use an extension cord.
- If you only have a two-prong wall receptacle, contact a qualified electrician to have it replaced with a grounded three-prong receptacle in accordance with applicable electrical codes.
- This icemaker requires a standard 115 Volts A.C. 60Hz grounded electrical outlet.
- It is recommended to have a dedicated circuit serving only the icemaker. Use receptacles that cannot be turned off by a switch or pull chain.
- The cord should be secured behind the icemaker and not left exposed or loose.
- The fuse (or circuit breaker) size should be 15 amperes.

➢ EXTENSION CORD

Because of potential safety hazards, THIS APPLIANCE IS NOT RECOMMENDED FOR USE WITH AN EXTENSION CORD. However, if you must use an extension cord, USE ONLY A UL/CUL-Listed, 3-wire grounding type appliance extension cord WITH a grounding type plug and outlet. the electrical rating of the cord MUST be 115 volts and at least 15 amps.

➢ SAFETY PRECAUTIONS

- Do not connect or disconnect the electric plug with wet hands.
- Never clean the icemaker with flammable fluids. These fumes can create a fire hazard or explosion. Do not store gasoline or other flammable vapors/liquids in the vicinity of this or any other appliance.
- Always turn unit off and disconnect power and water line before servicing.
- Replace all panels after servicing or maintenance.
- Do not attempt to repair or replace any part of the icemaker unless specifically recommended by the manufacturer. All other servicing should be referred to a qualified technician.
- Have two or more people to move and install this icemaker. Failure to do so may result in injury.
- Never install or operate the unit in an enclosed area, such as a closed cabinet. Choose a well-ventilated area with temperatures between 50℉ to 100℉. The unit MUST be installed in an area protected from the elements, e.g., wind, rain, water spray or drips.
- Do not locate next to ovens, grills or other sources of high heat.
- The icemaker must be installed with all electrical, water and drain connections in accordance with state and local codes.
- Do not kink or pinch the power supply cord between the icemaker and cabinet.
- The unit must be leveled in order to work properly.
- All installations must be in accordance with local plumbing code requirements.
- Make certain the pipes are not pinched or kinked or damaged during installation.
- Check for leaks after water line connection.
- Never allow children to operate, play with or crawl inside the icemaker.
- Although the unit has been tested at the factory, due to long-term transit and storage, the first batches of cubes must be discarded.
- Never turn the water supply tap off when the icemaker is working.
- If the icemaker has not been used for a long time, clean thoroughly before use. Follow instructions provided for cleaning and sanitizing. Do not leave any solution inside the unit after cleaning.
- The plug must be accessible after installation.
- DO NOT use solvent-based cleaning agents or abrasives on the interior. These cleaners may transmit taste to the ice cubes, or cause damage or discoloring to the interior.
- The ice machine cleaner contains acids. DO NOT use or mix with any other solvent-based cleaning products. Use rubber gloves to protect hands. Read and follow safety instructions on the container.
- Do not use this appliance for other than its intended purpose.
- Do not touch the evaporator by hand when unit is operating.
- This appliance is not intended for use by persons (including children) with reduced physical, sensory or mental capabilities or lack of experience and knowledge, unless they have been given supervision/instruction concerning the use of this appliance by person responsible for their safety.
- Connect to a potable water supply only.
- If the supply cord is damaged, it must be replaced by the manufacturer, a service agent or similarly qualified person in order to avoid a hazard.
- SAVE THESE INSTRUCTIONS.

➢ TECHNICAL INFORMATION

Model	IM-600US
Electrical input	115V ~ 60Hz
Power consumption	12.2kWh/100 lbs of ice
Ice-making/Ice harvest rated current	3.0A / 3.6A
Unit dimension	14.6(W) x 23.6(D) x 32.8(H) inches
Unit weight	84 lbs
Ice storage capacity	25 lbs (maximum)
Ice-making capability	50 lbs/day*
Ice shape	Cube
Ice cube dimension	0.75 x 0.75 x 1 inch

The technical data and performance index listed above is for reference only.
* The actual quantity of ice produced per day will vary with room and water conditions.

➢ **NOTE ON ICE STORAGE**

This type of icemaker produces crystal-clear, gourmet ice cubes. An insulated ice storage bin is built into the unit. When the bin is filled with ice to its max capacity, the icemaker will automatically shut off. The ice in the bin will slowly melt and go out the drain. Once the amount of ice is reduced below it max capacity, the icemaker will automatically start again.

➢ **COMPONENTS**

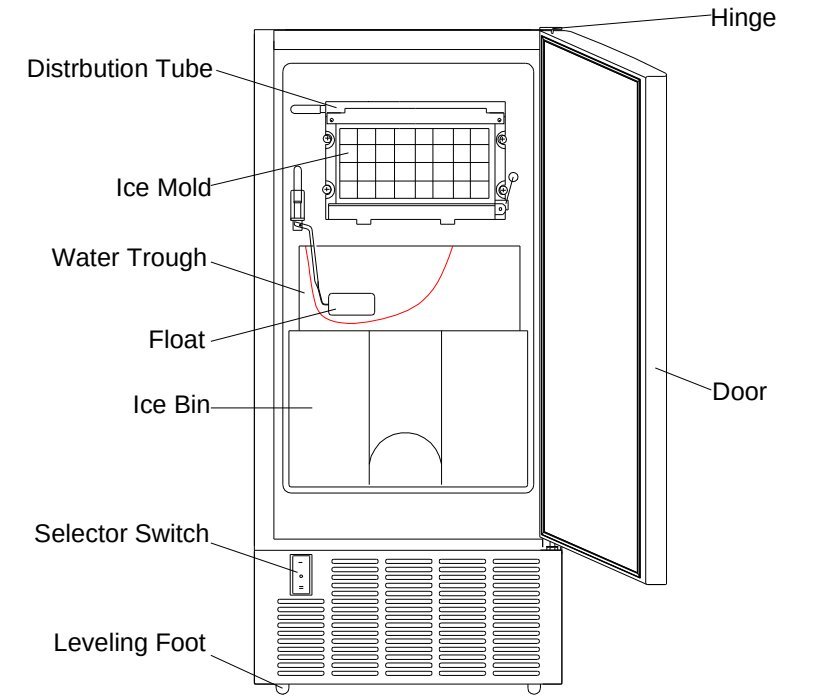

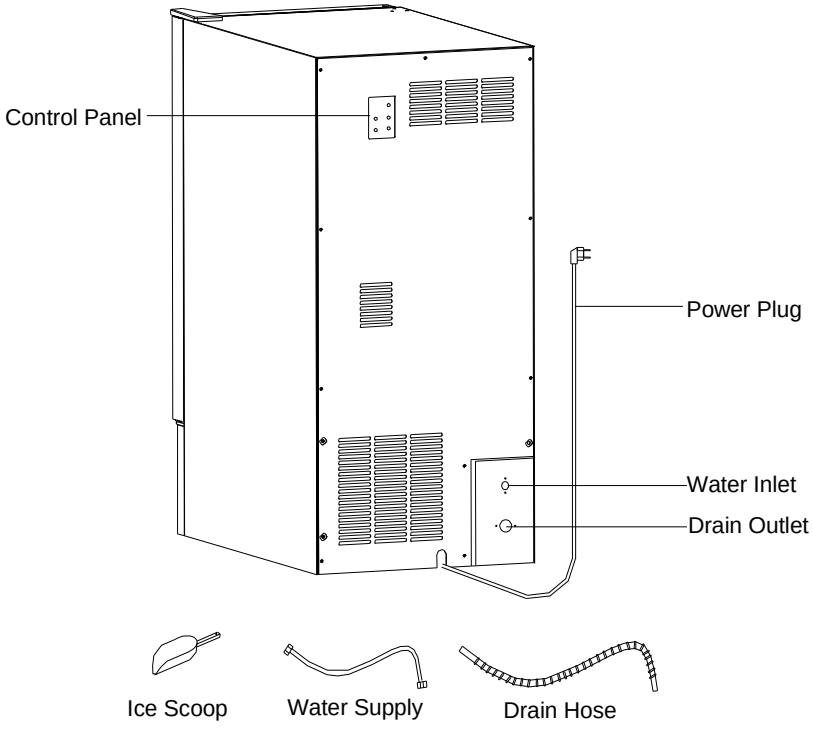

INSTALLATION INSTRUCTIONS

➢ **BEFORE USING YOUR ICE MAKER**

- Remove exterior and interior packing materials.
- Do not remove any permanent instruction labels or data label on the icemaker.
- Remove tape and glue from the icemaker before using. Tape or glue residue can be easily removed by rubbing a small amount of liquid dish soap over the adhesive with your fingers. Wipe with warm water and dry.
- Do not use sharp instruments, rubbing alcohol, flammable fluids or abrasive cleaners to remove tape or glue. These products can damage the surface of the icemaker.
- Clean the inside of the icemaker before use. Follow “interior cleaning” instructions under the Cleaning and Maintenance section.

➢ **LOCATION REQUIREMENTS**

This icemaker is designed for freestanding, recessed or built-in installation. In any case, there must be adequate ventilation and access for service.
Installation clearances:

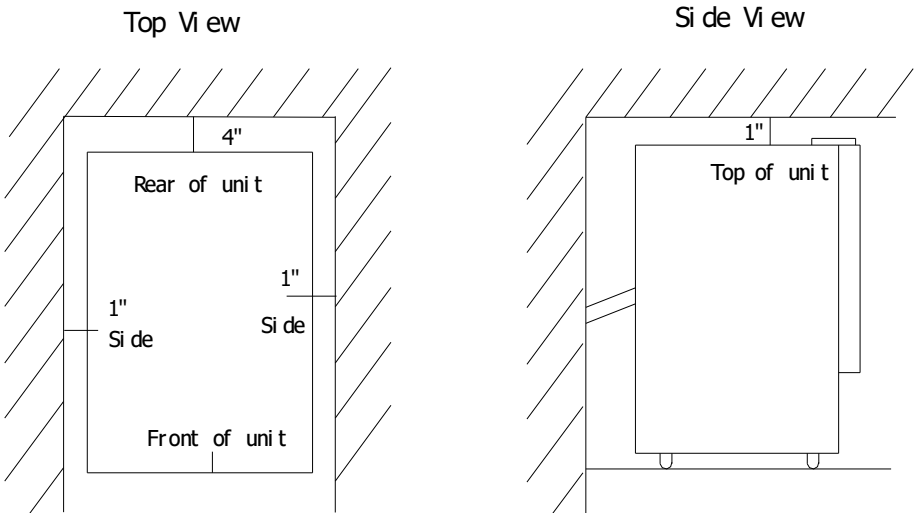

➢ **INSTALLATION OF YOUR ICE MAKER**

- Have two or more people to move and install this icemaker. Failure to do so can result in back or other injury.
- **This icemaker should be installed by a licensed plumber only.**
- To ensure proper service access and ventilation, allow at least 4” of clearance at the rear and 1” at the top and sides. This installation will allow the unit to be pulled forward for servicing when needed.
- When installing the icemaker under a counter, follow the recommended spacing dimensions shown. Place electrical and water supplies and drain fixtures in the recommended locations as shown.
- Choose a well ventilated area with temperature between 50℉ to 100℉. This unit MUST be installed in an area protected from the elements, e.g., wind, rain, water spray or drips.
- The icemaker requires a continuous water supply with a minimum pressure of 15 psig and a static pressure not to exceed 80 psig. The temperature of the water feeding into the icemaker should be between 41℉ to 90℉ for proper operation.

> **⚡WARNING⚡**
> Ambient operational temperature should be between 50℉ and 100℉. The water temperature entering the unit should be between 41℉ and 90℉. Operating outside these temperatures may result in lowered production or other adverse effects.

- In general, it is always a good idea to filter the water. A water filter can remove taste and odors as well as particles. Where water is very hard, softened water may result in white, mushy cubes that

stick together. De-ionized water is not recommended.

- Place the icemaker on a level surface that is strong enough to support the unit when it is fully loaded. Remember that the unit will be significantly heavier once it is operational and fully loaded. Level the unit by adjusting the legs at the front of the icemaker.
- The unit should be located on a firm and level surface. If needed, adjust the height of the icemaker by rotating the leveling leg.
- Locate the icemaker away from direct sunlight and other heat sources (stove, heater, radiator, etc.).
- Extremely cold ambient temperatures may cause the icemaker to malfunction. This icemaker is designed for installation and use indoors under controlled ambient conditions.
- PLUG THE ICE MAKER INTO A DEDICATED, PROPERLY INSTALLED GROUNDED WALL OUTLET. DO NOT UNDER ANY CIRCUMSTANCES CUT OR REMOVE THE THIRD (GROUND) PRONG FROM THE POWER PLUG. ANY QUESTIONS CONCERNING POWER AND/OR GROUNDING SHOULD BE DIRECTED TOWARD A CERTIFIED ELECTRICIAN.

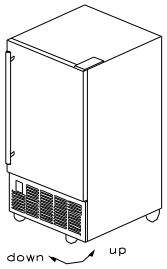

- **<u>REVERSING THE DOOR</u>**

Tools needed: Flathead screwdriver, Phillips screwdriver
IMPORTANT: before you begin, unplug the icemaker.

To remove door from hinges:

1. Remove the top hinge cover.
2. Use a Phillips screwdriver and remove the screws. Then remove the top hinge mat and top hinge. Keep all parts together and set aside.
3. Lift the door off the bottom hinge and turn it upside down. Set aside.

To replace door on hinges:

1. Use a flathead screwdriver to pry and remove the plug buttons from the screw holes on the opposite door hinges, top and bottom. Set aside.
2. Remove the front louver. Set aside.
3. Remove the bottom hinge and transfer it to the opposite side (bottom of door).
4. Position the door on the bottom hinge.
5. Align the door on the bottom hinge and replace the top hinge and top hinge mat.
6. Replace top hinge cover.
7. Insert plug button to cover the original screw holes.

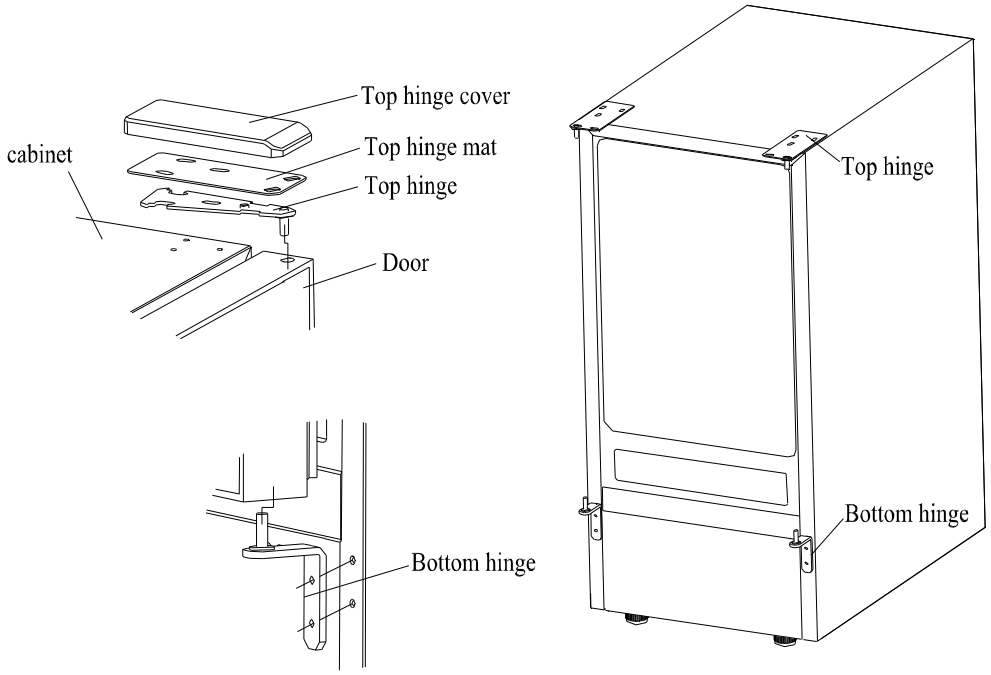

➢ CONNECTING THE WATER SUPPLY

⚡WARNING⚡
IMPROPER WATER LINE CONNECTION MAY RESULT IN FLOODING
YOU MUST USE A LICENSED PLUMBER
REVIEW STATE AND LOCAL PLUMBING CODES BEFORE INSTALLATION

- The water supply should be ready at the point of installation. The water supply pressure should be 15-psig minimum with static pressure no more than 80 psig.
- A wall outlet directly behind the icemaker will make installation easier.
- Be sure pipes are not pinched or kinked or damaged during installation.
- Check for leaks after connection
- All the necessary hardware is NOT PROVIDED (as the plumbing fixtures at the installation point may differ). It is necessary to hire a professional licensed plumber to complete the installation.

Tools required: ½ in. open-end wrench, Phillips screwdriver
Connecting the water line:
1. Turn off main water supply. Turn on nearest faucet long enough to clear line of water.
2. Find a ½ in. to ¾ in. vertical cold water pipe near the installation location. The distance should be less than 9 feet. The water supply hose provided is approximately 9 ft long.
3. A shut-off valve must be installed to the main water supply. If the water pipe has a plain piece of cooper tubing, attach a ¼" O.D. compression union to the tubing and remove the nut.
4. Connect water supply hose nut to tap and water inlet valve. Tighten firmly by hand, then one-half turn with wrench.
5. Turn on main water supply at tap. Check for water supply connection leaks. Tighten every connection (including connections at the water inlet).

IMPORTANT: When connecting the water supply hose, pay attention to the indication of "Water Inlet" on the machine.

➢ DRAINAGE

NOTE: There is a drain line on the icemaker. Please drain water to your drain through the drain line provided with the icemaker.
1. Locate the floor drain. The distance should be less than 5 feet. The length of the drain hose provided is approximately 5 feet long.
2. Find the drain hose on the back of the icemaker. Insert the other end of the hose into the drain line.
3. All horizontal runs of drain line must have a fall of ¼" per foot. An air gap will likely be required between the drain hose and the drain receptacle. A standpipe with a trap below it would be acceptable for the drain receptacle. A floor drain is also acceptable.
4. Pour 1 gallon of water into the ice storage bin to check for proper drainage.

Note: a condensate pump can allow for installation of drain that is more than 5 feet away. Consult your plumber for advice.

➢ INSTALLATION TYPES

Freestanding installation:
A freestanding installation will allow you to install the icemaker in any place you desire proved you have access to a water supply and a drain. You must follow the stated instructions for: (a) electrical requirements, (b) water supply and drain and (c) leveling the icemaker.
Recessed installation:
A recessed installation will allow you to install the icemaker under a counter, or in a kitchen cabinet provided the required clearance around the unit is respected.
Built-in installation:
If this method of installation is chosen, it will be necessary to allow adequate ventilation space around the unit (make sure there is at least ventilation behind the unit). The following must also be observed:
1. Place the unit in front of the installation location. Remove the feet and place unit flat on the floor or on a platform, depending on your installation requirements.
2. The water supply must be plumbed before connecting to the icemaker. Install the drain line to drain.
3. Turn on main water supply and tap. Check for water supply connection leaks. Tighten any connections (including connections at the tie-in).
4. If electrical outlet for the unit is behind the cabinet, plug in the icemaker.
5. Push the icemaker into position.
6. Seal all around the cabinet to the floor with an approved caulking compound.

OPERATING YOUR ICE MAKER

- **OPERATION CHECK LIST**
  - ❑ All packing material and tape removed?
  - ❑ Ice storage bin cleaned?
  - ❑ Unit properly installed by a licensed plumber with proper drainage?
  - ❑ Is unit leveled?
  - ❑ Ambient temperature is between 50℉ and 100℉?
  - ❑ Supplied water temperature is between 41℉ to 90℉ year round?
  - ❑ Water pressure is 15 psig minimum and static pressure no more than 80 psig?
  - ❑ Clearance around the unit for proper air circulation?
  - ❑ Power supply checked and tested against the nameplate rating?
  - ❑ Proper grounding installed for the unit?
  - ❑ Checked for leaks at water supply connection and at the drain?
  - ❑ Unit plugged in and water supply turned on?

- **OPERATION OF THE ICEMAKER**

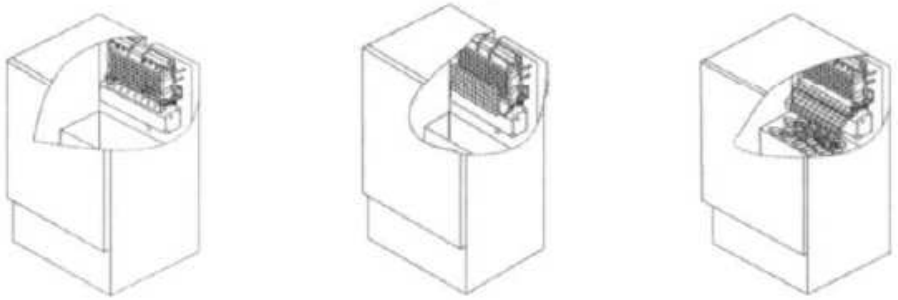

Ice making stage Ice harvest stage Ice full stage

1. Turn on the main water supply and allow water to flow through. Lift switch to “ICE” position and unit will begin working automatically.
2. After 3 minutes, the unit will go into ice making stage and sound of water flowing can be heard.
3. When the batch of ice has been fully formed, it will automatically be harvested to the ice storage bin.
4. When ice storage bin is full and ice cubes keep the ice-full probe open, the unit will stop making ice automatically.
5. The unit will resume making ice after ice cubes are removed (or melted) and the ice-full probe swings back to operating position.

IMPORTANT: THROW AWAY THE FIRST FEW BATCHES OF ICE.

- Never turn the water supply off when icemaker is operating.
- Never touch the evaporator when the machine is running.
- Except to take ice from the unit, keep the door closed to reduce melting and insure proper ice formation.
- A complete cycle takes 14 to 40 minutes, depending on temperature and operating conditions.

- **UNDERSTANDING THE ICEMAKER**

There are two distinct cycles for this unit: Freeze and Harvest:

Freeze: During the freeze cycle, the compressor pumps refrigerant, fan motor blows air and water is pumped to the evaporator surface. When the batch of ice has been fully formed, the unit stops the freeze cycle and begins the harvest cycle.

Harvest: During the harvest cycle, the compressor is still operating but the water pump stops. The hot gas valve opens and delivers hot air to the evaporator. The evaporator is warmed and cubes will slide off into the storage bin. The freeze cycle will restart when all cubes have been harvested.

How the unit uses water

The icemaker begins with a fixed charge of water that is contained in the water trough. As the water flows to the freezing evaporator surface, water that does not contain mineral impurities will freeze and stick to the ice cube molds. Water containing impurities will fall back into the trough. During the ice making process, fresh water enters the trough continuously as water from the trough freezes continuously on the evaporator.

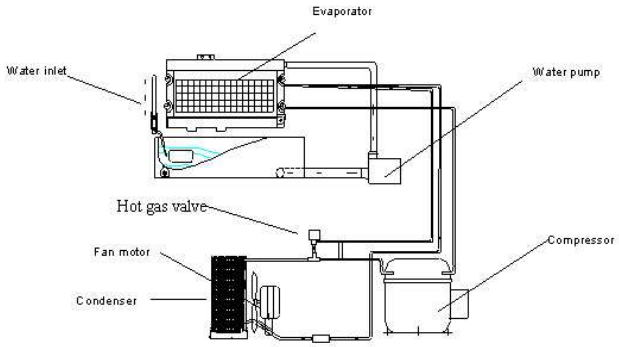

Sounds the unit may make

Your new icemaker may make sounds that are not familiar to you. Most of these sounds are normal. Hard surfaces like the floor or wall can make the sounds seem louder than they actually are. The flowing describes the possible sounds you may expect to hear:

- The high efficiency compressor makes a pulsating or high-pitched sound.
- Water running from the evaporator to the water bin may make a splashing sound.
- At the end of each cycle, you may hear a gurgling sound due to refrigerant flowing in the unit.
- Sound of air being forced over the condenser by the condenser fan.
- During the harvest cycle, you may hear the sound of ice cubes falling into the storage bin.

➢ **<u>CONTROL BOX</u> (rear of unit)**

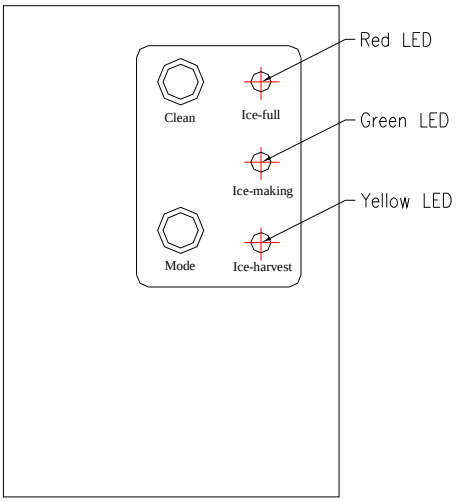

RED LED: Ice full indicator light.
When this LED is lit, the ice storage bin is full or there is something between the two arms of the ice-full sensor. The unit will stop working. When ice cubes are removed and the sensor is cleared, the red LED will flash for 3 minutes and unit will return to ice making mode.

GREEN LED: Ice making indicator light.
When this LED is lit, the unit is in ice making mode, controlled by a temperature probe on the evaporator. When the green LED flashes, the unit is in ice making mode, controlled by a fixed timer.

YELLOW LED: Ice harvesting indicator light.
When this LED is lit, the unit is in ice harvest mode, controlled by a temperature probe on the evaporator. When the yellow LED flashes, the unit is in ice harvest mode, controlled by a fixed timer.

CLEAN BUTTON: When this button is pressed, the unit enters Cleaning mode. Green and yellow LED's will flash. To stop the cleaning mode, press the button again.

MODE BUTTON: Mainly for service. When this button is pressed, unit changes from ice making mode to ice harvest mode or vice versa. The unit's current mode is indicated by the green or yellow LED's.

Adjusting Ice Cube Size:

1. Press and hold firmly the "**Clean**" button first, and while still holding the "**Clean**" button, press and hold the "**Mode**" button for at least 3 seconds. The unit will enter the Ice Size Adjustment MODE when the "**ICE MAKING**" LED (green) starts to blink rapidly (Ice full (Red) and/or Ice Harvest (Yellow) light will also blink depending on which size the ice is set to).
2. Release both buttons, only the Green LED will be blinking continuously indicating size adjustment mode.
3. While in the Ice Size Adjustment mode, press the "**Clean**" button or the "**Mode**" button for the desired ice size.

<u>Smaller ice setting</u>:

By pressing the "**Clean**" button, you can decrease the size of the ice cubes. The "**ICE FULL**" LED (red)

will blink each time as a smaller ice size is set and will finally blink continuously when the smallest ice size setting has been reached.

Larger ice setting:
By pressing the "**Mode**" button, you can increase the size of the ice cubes. The "**ICE HARVEST**" LED (yellow) will blink each time as the larger size is set and will blink continuously when the largest ice size setting has been reached.

After 10 seconds without any operation, the unit will return to the previous mode.
NOTE:

- During ice size adjustment, wait until LED light blinks before pressing the button again.
- During the ice size adjustment, when the "**ICE FULL**", "**ICE MAKING**" and "**ICE HARVEST**" LEDS all blink at the same time, it indicates unit's ice size is set to in the regular (middle) size.
- The ice size can only be adjusted during ice making and ice harvest stage. When the ice bin is full or machine cleaning stage, the ice size is not available for adjusting.

CARE AND MAINTENANCE

FAILURE TO UNPLUG THE ICE MAKER PRIOR TO CLEANING, MOVING, OR SERVICING COULD RESULT IN ELECTRICAL SHOCK OR PERSONAL INJURY.

➢ CLEANING YOUR ICE MAKER

Periodic cleaning and proper maintenance will ensure efficiency, performance and long life.

Exterior Cleaning
The door and cabinet may be cleaned with a mild detergent and warm water solution (1oz dishwashing liquid to 2 gallons of warm water). Do not use solvent based or abrasive cleaners. Use a soft sponge and rinse with clean water. Wipe with a soft clean towel to prevent water spotting.

Interior Cleaning
The ice storage bin should be sanitized occasionally. Clean the water trough before the icemaker is used for the first time and after an extended period of non-use. It is usually convenient to sanitize the trough after the ice making system has been cleaned and ice storage bin is empty.

1. Disconnect power to the unit
2. Open the door and take out the ice storage bin. With a clean cloth, wipe down the interior of the unit with a sanitizing solution (2 tablespoons of baking soda to a quart of warm water).
3. Rinse thoroughly with clean water
4. Clean the ice storage bin and replace back inside the unit.
5. Reconnect power to the unit.
6. The ice scoop should be washed regularly.

Note: Never keep any foreign objects in the ice storage bin. Items such as wine or beer bottles are not only unsanitary, the labels may slip off and plug up the drain.
DO NOT use solvent-based cleaning agents or abrasives on the interior. The cleaners may transmit taste to the ice cubes or damage the interior.

Condenser Cleaning
A dirty or clogged condenser prevents proper airflow, reduces ice-making capacity and causes increased operating temperatures that may lead to component failure. Have the condenser cleaned as least once every six months.

1. Unplug the icemaker or disconnect power
2. Remove the 2 screws at the bottom of the front cover. Remove cover.
3. Remove dirt and lint from the condenser and the compartment with a vacuum's brush attachment.
4. Reassemble the front cover. Reconnect power.

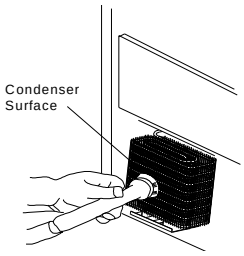

Water Distribution Tube Cleaning

When ice cubes are formed incomplete or when output of ice is slow, the water distribution tube may be blocked. Set the unit switch to OFF position and gently remove the water distribution tube. Use a toothpick or similar tool, dredge the tube and replace tube back to original position. If the tube is badly blocked, turn off water supply and disconnect the water hose from the distribution tube. Use a brush and clean the tube with a diluted solution of warm water and mild detergent. Rinse thoroughly and replace. Reconnect the water supply.

Ice-Making System Cleaning

Minerals that are removed from the water during the freezing cycle will eventually form a hard scaly deposit in the water system. Cleaning the system regularly helps remove the mineral scale buildup. The frequency depends on how hard your water is or how effective your filtration may be. With hard water of 15 to 20 grains/gallon, you may need to clean the system once every six months.

1. Make sure all ice is off the evaporator. If ice is being made, wait for the cycle to complete. Turn the switch to the OFF position.
2. Remove all ice from the storage bin.
3. Keep the icemaker connected to the water supply. Pour 8 oz. of a Nickel-Safe Ice Maker Cleaner into the water trough. Wait five minutes and set switch to WASH position. The unit will begin the automatic clean mode.
   Note: Nickel-safe ice maker cleaner can be purchased locally at any home improvement store.
4. Allow 30 minutes for proper cleaning. After cleaning, set switch to OFF position. Drain off the wastewater via the drainpipe to the left of the trough.
5. Repeat steps 3 and 4 (without Ice Maker Cleaning Solution) to rinse the system 3 times.
   Note: The use of the Ice Maker Cleaning Solution in the water bin during the rinse is not needed.
6. Prepare a sanitizing solution (2 tablespoons of baking soda to a quart of warm water). Wipe the entire bin inside and out, covering every wall surface.
7. Fill a spray bottle with the sanitizing solution and spray all corners and edges, making sure to cover all surfaces with the solution.
8. Allow the solution to be in contact for at least three minutes.
9. Repeat step 5 to rinse the system once more.
10. Set the switch to ICE position. Unit will return to regular ice making mode.
11. Discard the first batch of ice.

WARNING

- The cleaning solution contains acids. DO NOT use or mix with any other solvent-based cleaner products. Use rubber gloves to protect your hands. Carefully read and follow the safety instructions on the cleaner's container.
- Discard the first batch of ice produced after cleaning.

➢ **POWER FAILURE**

IF THERE IS A POWER FAILURE, TRY TO MINIMIZE THE NUMBER OF TIMES THE DOOR IS OPENED.THIS WILL HELP THE MACHINE MAINTAIN A COOLER TEMPERATURE TO PRESERVE THE ICE UNTIL THE POWER IS RETURNED. IF THE POWER IS GOING TO BE OFF FOR AN EXTENDED PERIOD OF TIME, YOU SHOULD TAKE PRECAUTIONARY STEPS TO ENSURE WATER FROM THE DEFROSTING DOES NOT LEAK OUT.

➢ **VACATION TIME/STORAGE**

1. Shut off the water supply at the main water valve.
2. Disconnect the water supply at the main water source.
3. Set unit to OFF position and disconnect power.
4. Take out the ice storage bin to remove ice and water. Dry the bin.
5. Remove drainage tube from the water trough to drain off all water.
6. Leave the door open at least 2 inches to allow for circulation and to prevent mold and mildew.
7. Leave the water supply line and power cord disconnected until ready to reuse.

- **MOVING YOUR ICE MAKER**

- Securely tape down all loose items inside the icemaker.
- Turn the leveling screws up to the base to avoid damage.
- Tape the door shut.
- Make sure the icemaker stays in the upright position during transportation.

PROBLEMS WITH YOUR ICEMAKER?

YOU CAN SOLVE MANY COMMON PROBLEMS EASILY, SAVING YOU THE TROUBLE OF A SERVICE CALL. TRY THE SUGGESTIONS BELOW BEFORE CONTACTING CUSTOMER SERVICE.

TROUBLESHOOTING GUIDE

PROBLEM	POSSIBLE CAUSE OR FIX
The machine won't operate	Unit is not plugged in. The fuse is blown – replace fuse. Switch is set at OFF position Ice storage bin is full.
Water does not feed	Water supply tap is turned off The water supply pipe is not properly connected.
Machine is making ice, but bin does not fill up with ice.	Condenser is dirty and needs to be cleaned. The airflow to the icemaker is obstructed – check ventilation area around the unit. The ambient temperature or water temperature is high. Unit is placed near a heat source.
Water is leaking out the unit	If only a few water droplets on the door, this may be due to humidity condensing on the door. The water supply connection is not properly installed.
Ice cubes are partially formed – and white at the bottom	There's not enough water in the bin. Check if water supply has fallen below 15 psig. Filter may be restricted or there may be a water leak at the water trough.
Noise during operation	Feet are not leveled. Certain sounds are normal, refer to page 9
The icemaker stops suddenly while making ice	The electricity is off. The room temperature is out of the stated range. Disconnect unit and wait until temperature returns to the working range before resuming operation.
The body of the icemaker is electrified.	Unit is not properly grounded. Check your plug and outlet.
Scale builds up quickly inside the machine	Calcium level in the water is too high. Install a water-softening apparatus in front of the water inlet valve.

Your Guarantee

If this product is found to be faulty as a result of faulty materials or workmanship within one year from date of purchase, it will be repaired free of charge.

This guarantee is subject to the following terms:

- Sunpentown must be notified of the fault.
- Proof of purchase must be presented to Sunpentown's nominated representative.
- The warranty will be void if the product if modified, misused or repaired by an unauthorized person.
- The warranty after repair will not be extended beyond the original one-year period.
- All replacement parts will be new or reconditioned.
- Parts, which are replaced, become the property of Sunpentown.
- The warranty applies for the use of the product in the USA only.

What is NOT COVERED:

- Warranty does not include freight charges.
- Incidental or consequential damage caused by possible defects with this product.
- Damage to product caused by improper power supply voltage, accident, fire, floods or acts of nature.
- Failure of product resulting from unauthorized modifications to the product.
- Improper installation or failure to perform the necessary maintenance.

This GUARANTEE is in addition to your Statutory Rights

SUNPENTOWN INTERNATIONAL INC.
14625 Clark Ave, City of Industry, CA 91745
Tel: 626-336-2299 · Fax: 626-336-7116
service@sunpentown.com
www.sunpentown.com