BOSCH

Register your new device on MyBosch now and get free benefits:
bosch-home.com/welcome

MyBosch

Fridge-freezer

KDN..

en Operating and installation instructions Fridge-freezer 2

en Table of contents

Safety instructions 3
Directions for disposal 4
Specifications supplied 4
Installing the appliance 4
Connecting the appliance 5
Attaching handles 6
Getting to know the appliance 7
Switching on the appliance 8
Setting the temperature 8
Usable capacity 8
Fridge compartment 9
HyperFresh crisper drawer 9
Freezer compartment 10
Max. freezing capacity 10
Freezing and storing 10
Freezing fresh food 10
Defrosting frozen food 11
Fittings 11
Switching off and shutting down the appliance 12
Defrosting 12
Cleaning the appliance 12
Smells 12
Lighting (LED) 12
Saving energy 13
Operation noises 13
Rectifying minor faults yourself 13
After-sales Service 14

Safety instructions

This appliance complies with the relevant safety regulations for electrical appliances and is fitted with noise suppression.

The refrigeration circuit has been checked for leaks.

About these instructions

- Read and follow the instructions for installation and use. They contain important information on how to install, use and maintain the appliance.
- The manufacturer is not liable if you disregard the notifications and warnings in the operating and installation instructions.
- Retain all documents for subsequent use or for the next owner.

Risk of explosion

- Never use electric appliances inside the appliance (e.g. heaters or electric ice makers).
- Do not store products which contain flammable propellant (e.g. spray cans) or explosive substances in the appliance.
- Keep high-percentage alcohol tightly sealed and store in an upright position.
- Do not use additional means to accelerate the defrosting process other than those recommended by the manufacturer.

Risk of electric shock

Improper installations and repairs may put the user at considerable risk.

- When installing the appliance, ensure that the mains cable is not trapped or damaged.
- If the mains cable is damaged: immediately disconnect the appliance from the electricity supply.
- Do not use multi-outlet power strips, extension leads or adapters.
- Have the appliance repaired by the manufacturer, Customer Service or a similarly qualified person only.
- Use original parts supplied by the manufacturer only. The manufacturer guarantees that these parts satisfy the safety requirements.

Risk of cold burns

- Never put frozen food straight from the freezer compartment into your mouth.
- Avoid prolonged contact between your skin and frozen food, ice and the tubes in the freezer compartment.

Risk of injury

Containers which contain carbonated beverages may burst. Do not store containers which contain carbonated beverages in the freezer compartment.



Fire hazard/Danger due to refrigerants

The tubes of the refrigeration circuit convey a small quantity of an environmentally friendly but flammable refrigerant (R600a). It does not damage the ozone layer and does not contribute to the greenhouse effect. If refrigerant escapes, it may injure your eyes or ignite.

- Do not damage the tubes.

If the tubes are damaged:

- Keep naked flames and ignition sources away from the appliance.
- Ventilate the room.
- Switch off the appliance and pull out the mains plug.
- Please contact Customer Service.



Fire hazard

Portable multi-outlet power strips or power supplies may overheat, causing a fire.

Never leave portable multi-outlet power strips or portable power supplies behind the appliance.

Avoiding placing children and vulnerable people at risk

At risk here are:

- Children,
- People with limited physical, mental or sensory abilities,
- People who have inadequate knowledge concerning safe operation of the appliance.

Measures:

- Ensure that children and vulnerable people have understood the hazards.
- A person responsible for safety must supervise or instruct children and vulnerable people who using the appliance.
- Only children aged 8 years and above may use the appliance.
- Supervise children who are cleaning and maintaining the appliance.
- Never allow children to play with the appliance.

Risk of suffocation

- If the appliance features a lock: keep the key out of the reach of children.
- Keep children away from the packaging and its parts.

Damage to property

To prevent damage to property:

- Do not stand or support yourself on the base, runners or doors.
- Keep plastic parts and door seals free of oil and grease.
- Pull on the mains plug – not the power cord.

Weight

When installing and transporting the appliance, note that it may be very heavy.

Intended use

Use this appliance

- Only for cooling and freezing of food and for making ice.
- Only in the home and in the home environment.
- Only according to this user manual.

This appliance is intended for use up to a maximum height of 2000 metres above sea level.

Directions for disposal

♻ Disposing of packaging

The packaging protects your appliance from damage during transport. All the materials used are environmentally friendly and can be recycled. Please help by disposing of the packaging in an environmentally responsible manner.

Information about the available disposal methods and sites can be obtained from your appliance retailer or your local authority.

♻ Disposing of your old appliance

Used appliances are not valueless waste. Valuable raw materials can be recovered through environmentally responsible disposal.



This appliance is labelled in accordance with European Directive 2012/19/EU concerning used electrical and electronic appliances (waste electrical and electronic equipment - WEEE).

The Directive determines the framework for the return and recycling of used appliances as applicable throughout the EU.

⚠ Warning

Appliances at the end of their useful life:

1. Unplug the mains plug.
2. Cut the power cord and remove it along with the mains plug.
3. Do not remove the shelves and containers. Leaving them intact makes it more difficult for children to climb in.
4. Never let children play with a disused appliance. Risk of asphyxiation!

Refrigerators contain refrigerant as well as gases in the insulation material. Refrigerant and gases must be disposed of properly. Do not damage the refrigerant circuit pipes before disposing of them properly.

Specifications supplied

After unpacking the appliance, check all parts for transport damage.

If you find any defects, contact the retailer from whom you purchased the appliance or our After-sales Service.

The appliance supplied consists of the following components:

- Free-standing appliance
- Features (vary depending on the model)
- Bag of assembly materials
- Instructions for use and installation
- Service record
- Guarantee slip
- Information on energy consumption and noise

Installing the appliance

Transport

The appliance is heavy and must be securely fixed when being transported and installed.

Because of the weight and size of the appliance, and in order to minimise the risk of personal injury or damage to the appliance, at least two persons are required for moving and positioning the appliance safely.

The castors are provided for installation purposes only. Do not use the castors for transporting the appliance.

Do not move the appliance over uneven or soft ground on its castors.

Installation site

The ideal installation site is a dry, well ventilated room. The appliance should not be installed in a position that is exposed to direct sunlight or close to a source of heat, such as a cooker or radiator. If installation near to a source of heat is unavoidable, use a suitable insulating panel or keep to the following minimum distances from the source of heat:

- 3 cm from an electric or gas cooker.
- 30 cm from oil or solid fuel cookers.

Floor surface

The floor at the installation site must not give. Reinforce the floor if necessary.

The appliance is very heavy. The weight when empty is detailed in the table below.

Model	Weight
KDN30	62 kg

Wall clearance

If the appliance is positioned in the corner of a room or a recess, minimum clearances at the sides must be maintained so that the heated air is able to escape unimpeded and the appliance doors can be fully opened.

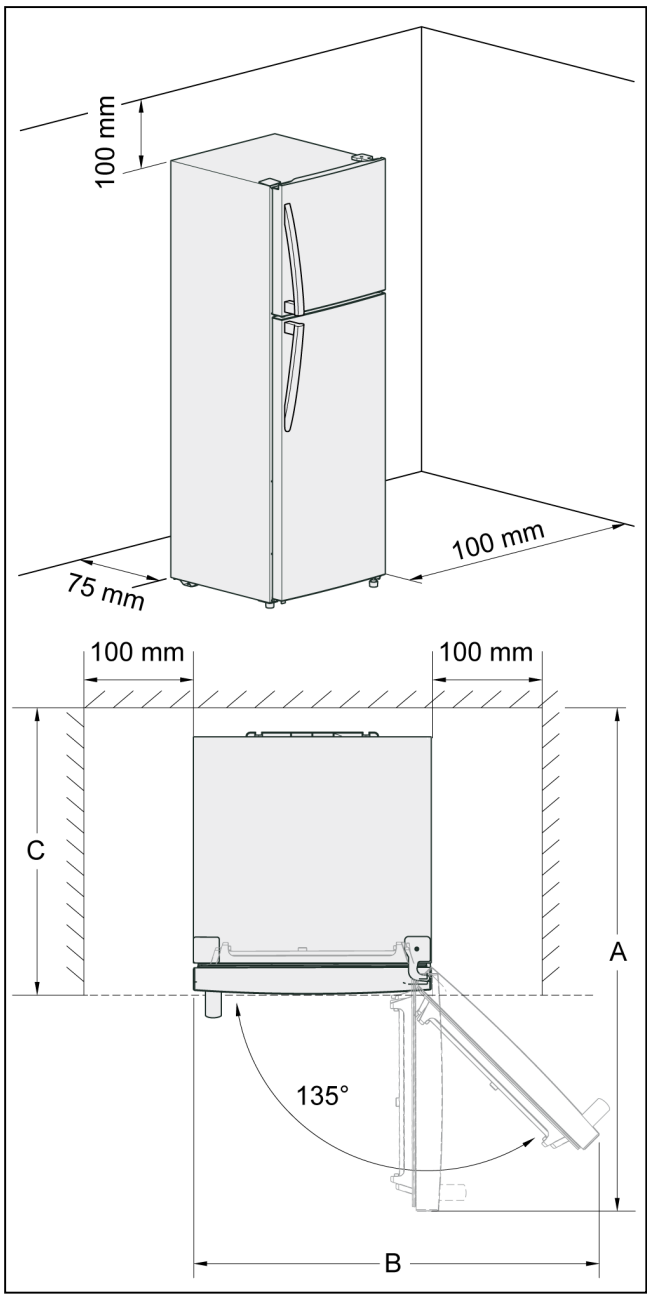

Model	A	B	C
KDN30	1301 mm	1020 mm	740 mm

Observe the room temperature and ventilation requirements

Room temperature

The appliance is designed for a certain climate class. Depending on the climate class, the appliance can be operated at the following ambient temperatures.

The climate class is specified on the rating plate.

Climate class	Permissible room temperature
SN	+10 °C to 32 °C
N	+16 °C to 32 °C
ST	+16 °C to 38 °C
T	+16 °C to 43 °C

Note

The appliance is fully functional within the room temperature limits of the specified climate class. If an appliance in the SN climate class is operated at lower ambient temperatures, damage to the appliance can be excluded up to a temperature of +5 °C.

Ventilation

The heated air must be able to escape unimpeded. Otherwise, the refrigerating unit has to work harder, which increases the appliance's power consumption.

Therefore:

- Never cover over or block the air vent.
- Keep minimum distances to walls and furniture.

Connecting the appliance

After setting up the appliance, wait for at least 4 hours before starting the appliance up. The oil contained in the compressor may have been displaced into the refrigeration system during transport.

Before starting the appliance up for the first time, clean its interior (see the section headed Cleaning the appliance).

Do not remove the transit locks from the shelves and trays until the appliance has been installed.

Electrical connection

The socket must be near to the appliance and easily accessible after the appliance has been installed.

The appliance conforms to protection class I. Connect the appliance to a 220-240 V/50 Hz alternating current supply using a socket with protective earthing conductor which has been correctly installed. The socket must be protected by a fuse with a rating of 10 A to 16 A.

In the case of appliances operated outside of Europe, check whether the voltage and type of current specified conform to the values of your electricity grid. You will find this information on the rating plate.

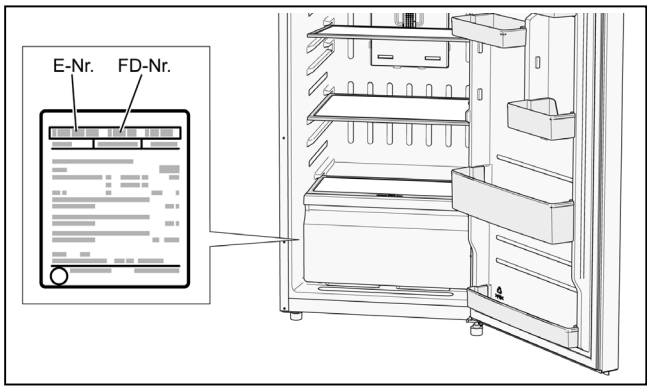

⚠ Warning

The appliance must never be connected up to an electronic energy-saving socket.

Sinusoidal-commutated and line-commutated inverters can be used with our appliances. Line-commutated inverters are used with photovoltaic systems that are connected directly to the national grid. Sinusoidal-communicated inverters must be used with standalone applications (e.g. on ships or mountain huts) that do not have a direct connection to the national grid.

Levelling the appliance

Note

To ensure that it functions properly, the appliance must be set level using a spirit level.

So that the appliance doors close automatically, set up the appliance that the front is max. 10 mm higher than the rear.

1. Move the appliance into its intended installation position.
2. Screw the feet in/out until the appliance is exactly level.

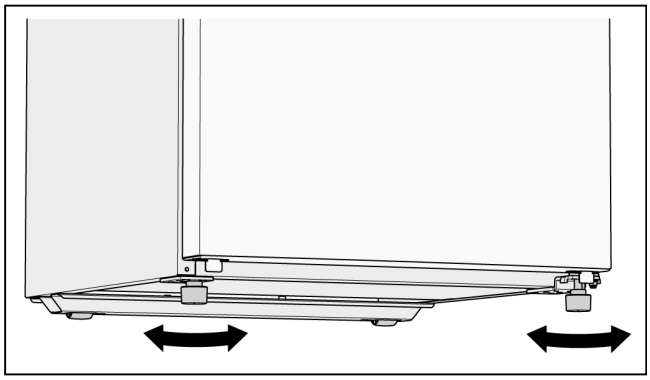

Attaching handles

Only attach the handles once the appliance has been positioned in its installation location and has been aligned so that it is level.

1. Pull the cover caps out of the holes.
2. Screw 2 holders each into the holes and tighten.

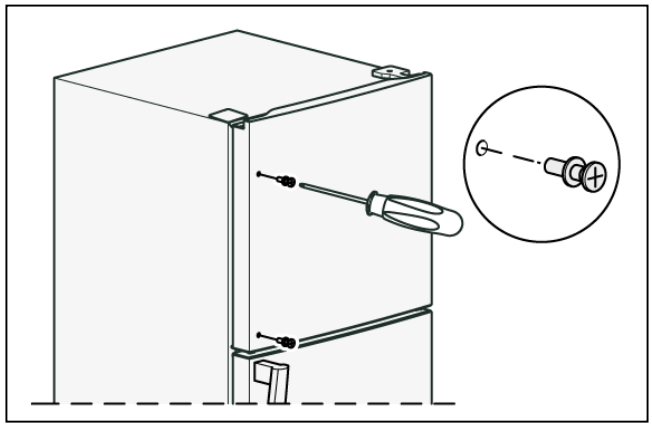

3. Put the handles on the holders until they are in contact with the door.

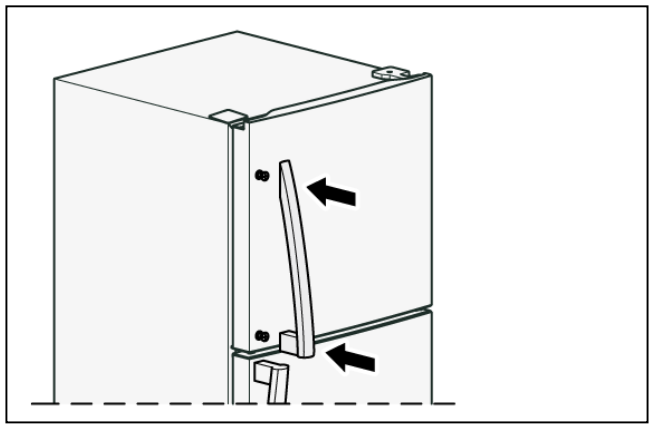

4. Tighten 2 Allen screws on each handle.

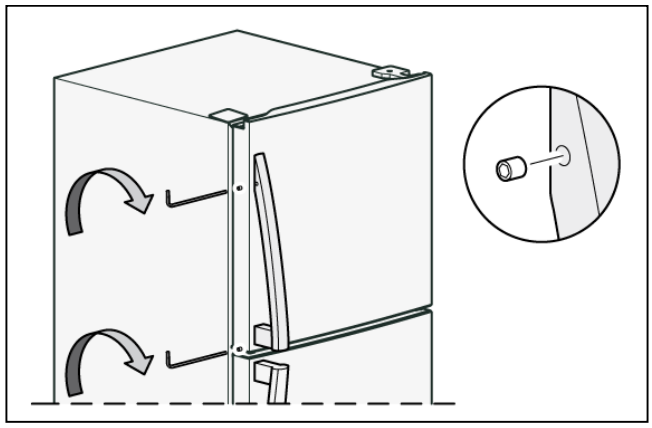

Getting to know the appliance

Appliance

The features of the models may vary.

The illustrations may differ from your particular model.

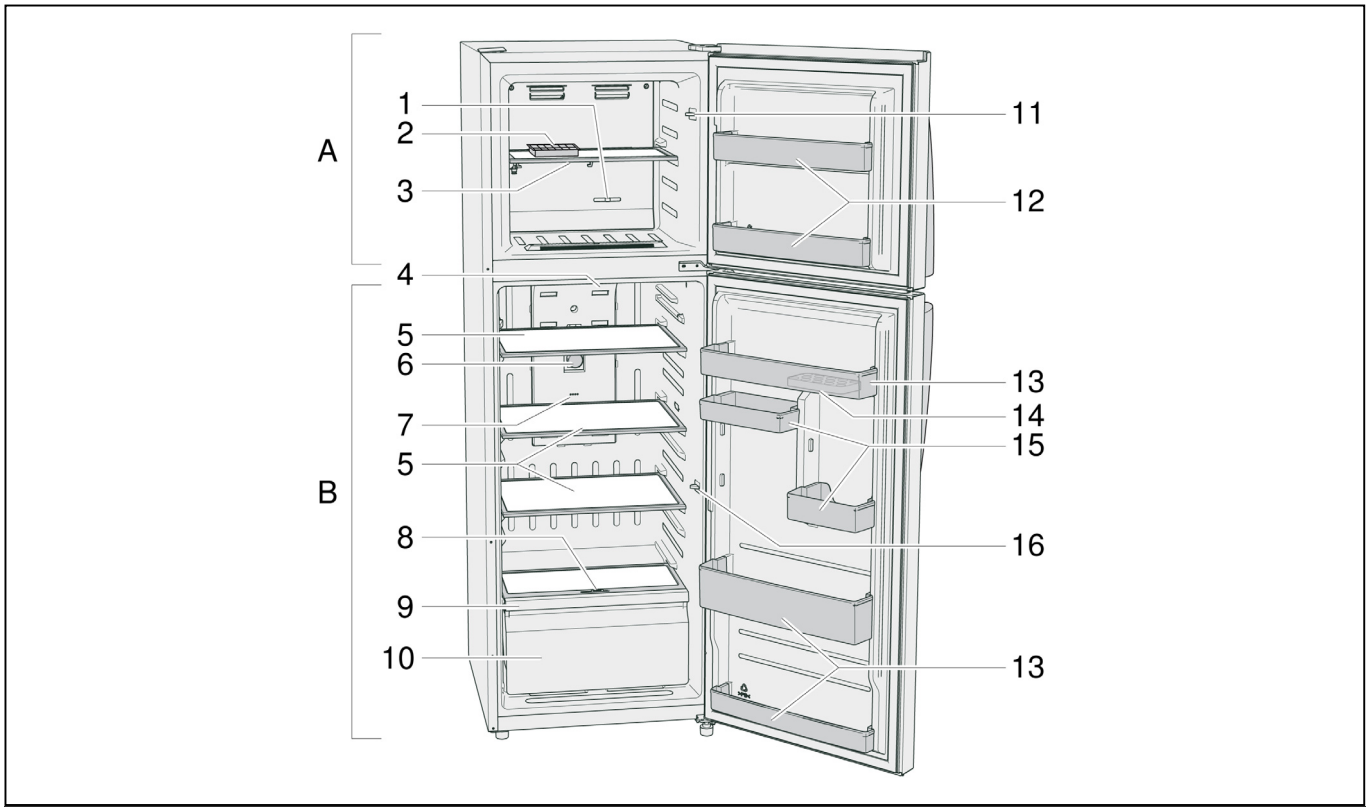

A Freezer compartment
B Fridge compartment

1 Temperature controller in freezer compartment
2 Ice-cube trays
3 Freezer compartment glass shelves
4 LED light
5 Fridge compartment glass shelves
6 Temperature controller in fridge compartment
7 Deodorizer Box
8 Humidity control sliding block
9 Cover for HyperFresh crisper drawer
10 HyperFresh crisper drawer
11 Upper door switch
12 Door pockets in freezer compartment
13 Door pockets in fridge compartment
14 Egg tray
15 Small door pockets
16 Lower door switch

Switching on the appliance

Plug the mains plug into the mains outlet socket.

The appliance will start cooling.

The light comes on when the fridge door is opened.

Notes on using the appliance

- After switching on the appliance, it may be several hours before the set temperatures are reached.

  Do not put any food in the appliance before then.
- Thanks to the fully automatic NoFrost system, the freezer compartment remains free of ice. Defrosting is not required.
- If you cannot open the freezer compartment door again immediately after closing it, wait a moment for the low pressure created to equalise.

Setting the temperature

Fridge compartment

Turn temperature controller to the required setting.

We recommend a medium temperature setting.

Note

The temperature controller is not continuously adjustable. The temperature controller must engage.

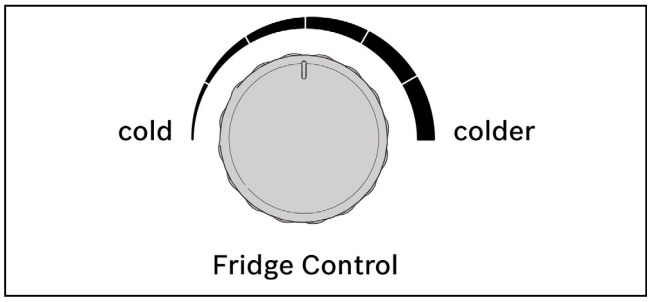

cold: Warmer temperature

colder: Cooler temperature (higher energy consumption)

We recommend:

- Perishable food should not be stored at a temperature above the medium setting.
- Medium setting for long-term storage of food.
- Low setting for short-term storage of food (energy-saving mode).
- Select a higher setting only temporarily, when the door is frequently opened or large quantities are placed in the refrigerator compartment.

Note

When a cooler fridge compartment temperature was set while the outside temperature is higher, the cooling unit runs very frequently or without interruptions. This results in higher energy consumption.

Freezer compartment

Set temperature controller to the required setting.

We recommend setting the temperature controller to the indicated position.

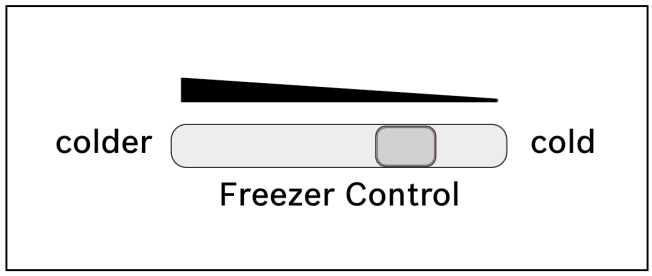

colder: Cooler temperature (higher energy consumption)

cold: Warmer temperature

Set cooler temperatures only as a temporary measure when large quantities of food are put into the freezer compartment or when ice is produced.

Note

We recommend not setting the temperature controller to the left-most position. Otherwise, the cooling unit runs very frequently or without interruptions.

Usable capacity

You will find the details of the usable capacity on the rating plate inside the appliance.

Using the entire freezing capacity

To accommodate the maximum quantity of frozen food, you can remove all of the fittings from inside the appliance. You can then stack the food directly on the shelves and the bottom of the freezer compartment.

How to remove and refit the fittings is described in the section headed Fittings.

Fridge compartment

The fridge compartment is the perfect place for keeping ready meals, bread and pastries, jams and preserves, condensed milk and hard cheeses.

When placing food in the fridge, follow these guidelines:

- Keep fresh, untouched food in the fridge. In that way it will keep longer and stay fresher.
- In the case of ready-made products and packaged foods and liquids, pay attention to the manufacturer's specified best-before or use-by date.
- In order to maintain flavour, colour and freshness, keep food well packed or covered over. That also prevents flavours from mixing and the plastic parts from becoming discoloured in the fridge compartment.
- Allow warm food and beverages to cool before putting them into the appliance.

Note

Keep food from coming into contact with the rear panel. Otherwise, the air circulation will be impaired.

Food or packaging could also become frozen to the rear panel.

Do not place food directly in front of the air outlet of the temperature sensor. If the air outlet is blocked, the appliance cannot operate correctly.

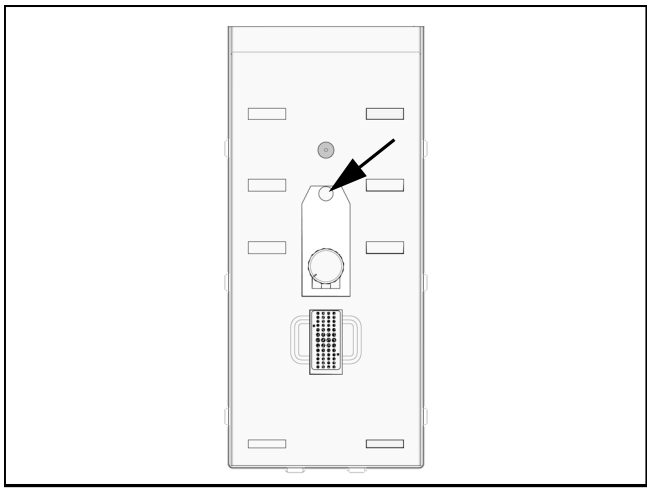

Pay attention to the temperature zones in the fridge compartment

The air circulation produces different temperature zones in the fridge compartment:

- The coldest zones are close to the rear panel.
- The warmest zone is at the very top of the door.

Note

Keep items such as hard cheese and butter in the warmest zone. That will allow the cheese to continue developing its flavour and the butter will remain spreadable.

HyperFresh crisper drawer

The crisper drawer is the optimum storage location for fresh fruit and vegetables.

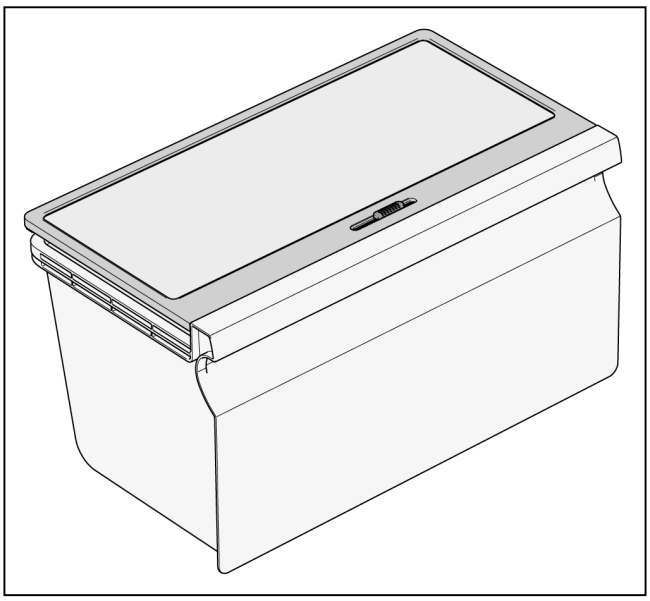

The humidity controller of the partition and a special seal can be used to adjust the air humidity in the crisper drawer.

The air humidity in the crisper drawer can be set according to the type and amount of products to be stored:

- Mainly fruit as well as for a large load:
  Move the controller to the left.
- Mainly vegetables as well as for a mixed load or small load:
  Move the controller to the right.

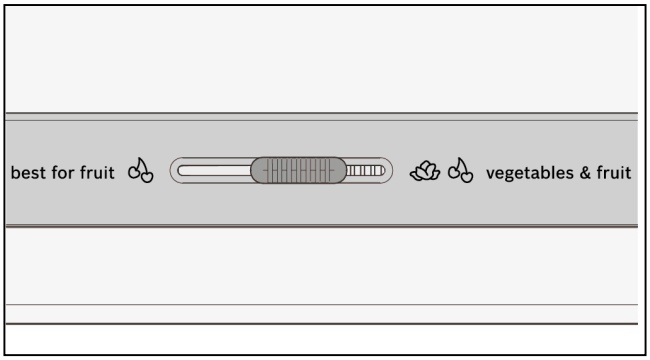

Note

- Fruit sensitive to cold (e.g. pineapple, banana, papaya and citrus fruit) and vegetables sensitive to cold (e.g. aubergines, cucumbers, zucchini, peppers, tomatoes and potatoes) should be stored outside the refrigerator at temperatures of approx. +8 °C to +12 °C for optimum preservation of quality and flavour.
- Condensation may form in the vegetable container depending on the food and quantity stored. Remove condensation with a dry cloth and adjust air humidity in the vegetable container with the humidity controller.

Freezer compartment

Use the freezer compartment for the following:

- Storing deep frozen food.
- To make ice cubes.
- To freeze food.

Note

Make sure that the freezer compartment door is always closed. When the door is open, the frozen foods defrost and the freezer compartment ices up heavily. In addition: Energy is wasted due to the power consumption.

Max. freezing capacity

You will find information on the maximum freezing capacity in 24 hours on the rating plate.

Conditions for use of max. freezing capacity

- Remove the freezer compartment fittings.
- Stack the food directly on the shelves and the bottom of the freezer compartment.

  Note

  Do not cover over the ventilation slots in the rear panel with the food you are freezing.

Freezing and storing

Purchasing frozen foods

- Packaging must not be damaged.
- Observe the best before date.
- The temperature in the commercial chest freezer must be -18 °C or colder.
- As far as possible, frozen food must be transported in an insulated container and quickly placed in the freezer compartment.

When arranging the food, note the following:

Spread the items out well in the compartments/trays.

Note

Food that is already frozen must not come into contact with the food that is to be freshly frozen.

Storing frozen food

If lots of food is to be stored, you can remove the glass shelf.

Avoid contact between food and rear panel. Otherwise the air circulation will be impaired.

Food or packaging could freeze to the rear panel.

Freezing fresh food

Only use fresh, undamaged food for freezing.

In order to retain the nutritional value, aroma and colour of the food as much as possible, blanch vegetables before they are frozen.
Blanching is not required for aubergines, peppers, courgettes and asparagus.

You can find literature about freezing and blanching in bookshops.

Note

Do not allow food that is to be frozen to sit right next to food that has already been frozen.

- The following are suitable for freezing:
  Baked goods, fish and seafood, meat, game, poultry, vegetables, fruit, herbs, eggs without their shells, dairy products such as cheese, butter and curd cheese, prepared dishes and leftovers such as soups, stews, cooked meat and fish, potato dishes, baked casseroles and sweet foods.
- The following are not suitable for freezing:
  types of vegetable that are usually eaten raw, such as lettuces or radishes, eggs in their shells, grapes, whole apples, pears and peaches, hard-boiled eggs, yoghurt, curds, soured cream, crème fraîche and mayonnaise.

Packing frozen food

Pack food so that it is airtight to prevent it from losing its flavour or drying out.

1. Store food in its packaging.
2. Press out any air.
3. Close the packaging tightly.
4. Label packaging with its contents and date of freezing.

The following are suitable as packaging:

Plastic film, polyethylene hose film, aluminium foil, freezer bags.
You will find these products at your specialist dealer.

The following are not suitable as packaging:

Wrapping paper, greaseproof paper, cellophane, rubbish bags and used shopping bags.

The following are suitable for sealing packaging:

Rubber bands, plastic clips, pack-twines, cold-resistant scotch tape, or similar.

Polyethylene bags and hose film can be fused closed using a bag sealer.

Storage life of frozen foods

The storage life depends on the type of food.

At a temperature of -18 °C:

- Fish, sausages, prepared dishes, baked goods:
  Up to 6 months.
- Cheese, poultry, meat:
  Up to 8 months.
- Vegetables, fruit:
  Up to 12 months.

Defrosting frozen food

You can choose between the following options, depending on the type of food and its intended use:

- at ambient temperature
- in the fridge
- in an electric oven, with/without hot air convection
- In the microwave oven.

⚠ Caution

Do not refreeze defrosted food. It can only be refrozen after it has been made into a ready-to-eat meal (cooked or roasted).

Do not continue to use the complete max. storage time for the frozen food.

Fittings

Glass shelves

The glass shelves can be removed and fitted at different heights.

Removing

Lift the glass shelf at the back and pull it out.

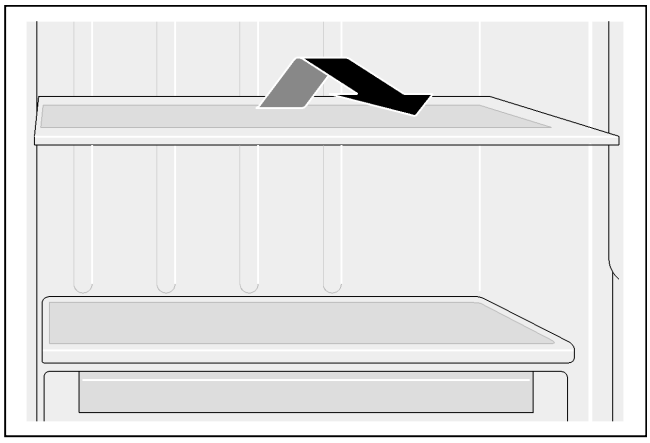

Inserting

Slide the glass shelf backwards on the guide rails until it snaps downwards into place.

Door pockets

The door pockets can be removed.

Pull the door pockets upwards to remove.

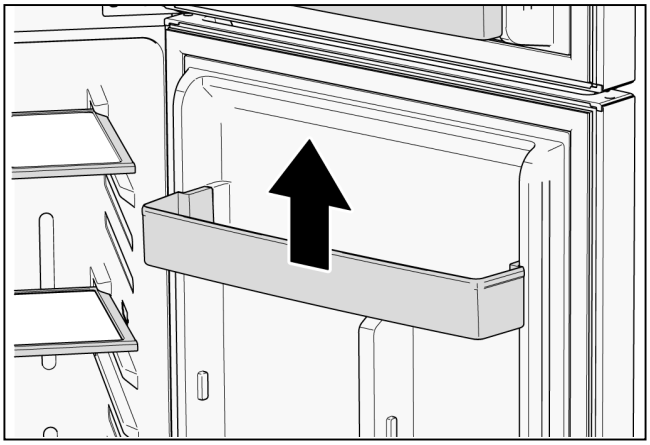

HyperFresh crisper drawer

The crisper drawer and the partition can be removed.

Removing

Pull the crisper drawer out as far as the stop, lift it at the front and remove it completely.

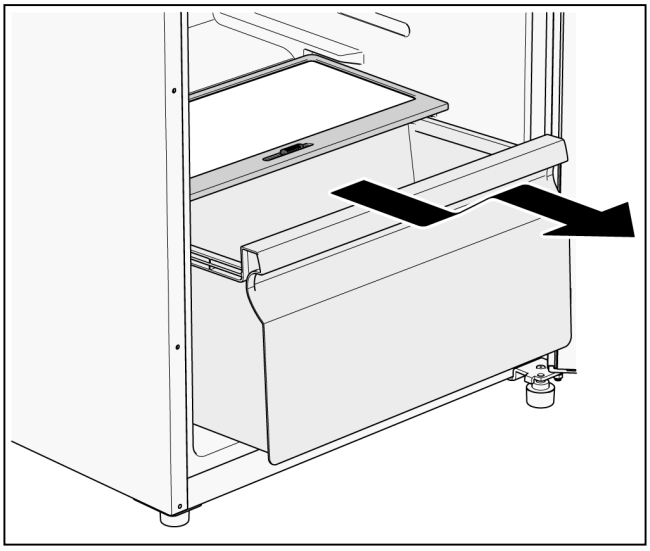

Lift the partition at the back and pull it out.

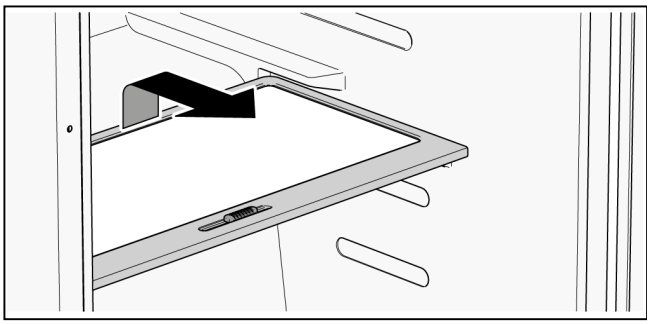

Inserting

Insert the crisper drawer into the guide rail and push to the rear.

Slide the partition backwards on the guide rails until it snaps downwards into place.

Ice-cube trays

The ice-cube tray is for producing and keeping ice cubes in.

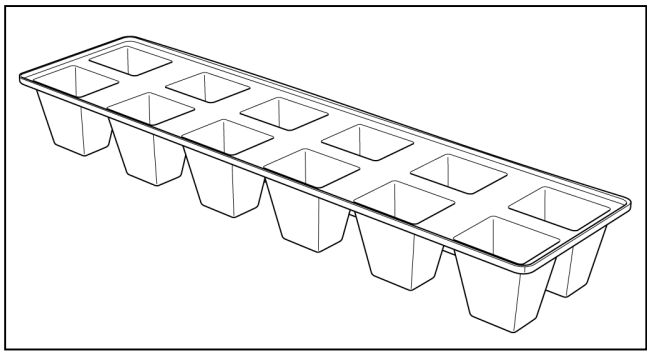

Egg tray

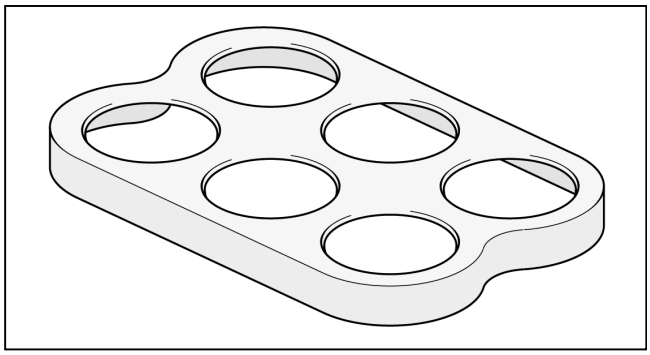

Switching off and shutting down the appliance

Switch off the appliance

Unplug the appliance from the mains or switch off the circuit-breaker.
The refrigeration system and lights switch off.

Putting the appliance out of service

If you do not use the appliance for long periods:

1. Remove all food from the appliance.
2. Switch off the appliance.
3. Clean the appliance.
4. Leave the appliance doors open.

Defrosting

Fridge compartment

While the appliance is in use, drops of condensation or frost form on the back of the fridge compartment. As the rear panel defrosts automatically, it is not necessary to remove the frost or the condensation.

Freezer compartment

Thanks to the fully automatic NoFrost system, the freezer compartment remains free of ice. There is no longer any need to defrost it.

Cleaning the appliance

⚠ Caution

- Do not use gritty, acidic or chlorine-based cleaning agents or solvents.
- Do not use abrasive cleaning pads or sponges that may scratch surfaces. This may lead to corrosion of the metallic surfaces.
- Never clean the shelves or containers in the dishwasher. The parts may warp.

Proceed as follows:

1. Switch off the appliance before cleaning.
2. Unplug the appliance from the mains or switch off the circuit-breaker.
3. Take out the food and store it in a cool place. Place an ice block (if you have one) on the food.
4. Wait until the layer of frost has thawed out.
5. Clean the appliance with a soft cloth, lukewarm water, and a little pH-neutral washing-up liquid. The washing-up liquid solution must not be allowed to get into the lights or run into the evaporation tray through the drain hole.
6. Only wipe the door seal with clean water and then rub it until it is dry.
7. After cleaning, reconnect the appliance to the mains and switch it on.
8. Put the food back in.

Fittings

All the variable components of the appliance can be removed for cleaning (see section headed Fittings).

Smells

If you notice unpleasant smells:

1. Unplug the appliance from the mains or switch off the circuit-breaker.
2. Remove all food from the appliance.
3. Clean the inside of the appliance (see section headed Cleaning the appliance).
4. Clean all packaging.
5. Pack strongly smelling food in air-tight containers to prevent odours.
6. Switch on the appliance again.
7. Arrange the food.
8. After 24 hours, check again to see if the smells have reappeared.

Lighting (LED)

Your appliance is equipped with a maintenance-free LED light.

Any repair work on the lighting must only be carried out by the after-sales service or authorised experts.

Saving energy

- Install the appliance in a dry, well ventilated room. The appliance must be installed out of direct sunlight and away from heat sources (e.g. heating elements, cooker).

  Use an insulating plate if necessary.
- Allow hot food and drinks to cool before placing them in the appliance.
- Place frozen food in the fridge compartment to defrost and utilise the low temperature of the frozen food to cool other food.
- Only open the appliance doors for as short a time as possible.
- To prevent the food warming up quickly in the event of a power cut or a fault, place blocks of ice in the top compartment directly on top of the food.
- Make sure that the freezer compartment door is always closed.
- The arrangement of the equipment parts shown in the section Getting to know the appliance requires the least amount of energy. Any other arrangements can result in higher energy consumption.
- To prevent increased power consumption, occasionally clean the air vent with a soft brush or vacuum cleaner.

Operating noises

Completely normal noises

Humming

Motors running (e.g. refrigeration units, ventilator).

Bubbling, whirring or gurgling noises

Refrigerant circulating through the pipes.

Clicking

Motors, switches or solenoid valves are switching on/ off.

Preventing noises

The appliance is not standing straight

Make sure the appliance is exactly level by using a spirit level. To adjust the position of the appliance, use the adjustable feet or place something underneath.

The appliance is touching adjacent units or appliances

Move the appliance away from adjacent furniture or appliances.

Containers or shelves are wobbling or sticking

Check the removable parts and re-insert them if necessary.

Containers are touching

Move the containers apart slightly.

Rectifying minor faults yourself

Before calling After-sales Service:

Check whether you can rectify the fault yourself by using the notes below.

You must pay the cost of the After-sales Service call out – even during the guarantee period.

Problem	Possible cause	Remedy
Appliance is not cooling/ freezing.	Power cut.	Check whether there is power to the appliance.
The lighting is not working.	Circuit-breaker is switched off.	Check circuit-breaker.
	Power plug not properly plugged in.	Check whether power plug is properly plugged in.
The refrigeration unit switches on with increasing frequency and for longer periods.	The appliance door is being opened frequently.	Do not open the appliance door unnecessarily.
	The ventilation openings are covered.	Remove any obstructions.
	Placing large quantities of food in the appliance.	Set a lower temperature.
	The temperature setting is too low.	Set a higher temperature.
The fridge compartment/ freezer compartment is too warm.	The appliance door is being opened frequently.	Do not open the appliance door unnecessarily.
	Placing large quantities of food in the appliance.	Set a lower temperature.
The fridge compartment/ freezer compartment is too cold.	The temperature setting is too low.	Set a higher temperature.

Problem	Possible cause	Remedy
The (LED) lighting does not work.	The LED lighting is faulty.	See section headed Lighting (LED).
	Door switch is sticking.	Check whether you can move the door switch.
	The appliance door was opened for too long. The lighting switches off after approx. 10 minutes.	After closing and opening the appliance door, the lighting is switched on again.
Unpleasant smells are noticeable.	Strongly smelling food not packed in air-tight containers.	Clean the appliance. Pack strongly smelling food in air-tight containers (see section headed Smells).
In the appliance a layer of ice is forming.	The ventilation openings are covered.	Remove any obstructions.
	The appliance door was not closed completely.	Close the appliance door completely.
	The door seal is dirty.	Clean the door seal. See section headed Cleaning the appliance.
Appliance doors can only be closed with difficulty.	Food prevent the doors from closing correctly.	Remove any obstructions.
	The appliance is not evenly aligned.	Align the appliance evenly. See section headed Aligning the appliance.

After-sales Service

You can find your local After-sales Service centre in the phone book or the After-sales Service directory. Please quote the product number (E no.) and production number (FD no.) of your appliance.

You will find this information on the rating plate.

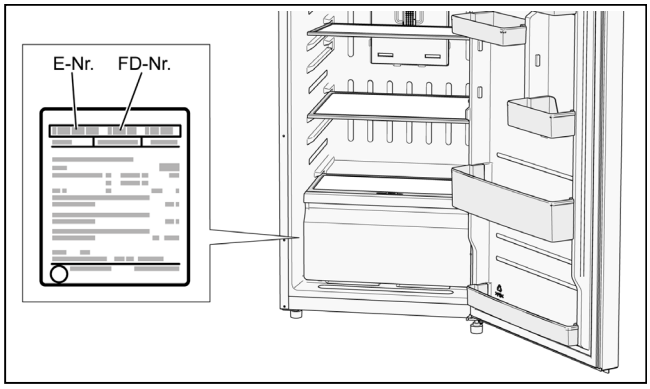

Please help us to avoid unnecessary journeys by quoting the appliance and production number. By doing so, you will save any associated additional charges.

Booking a repair call-out and advice on faults

The After-sales Service contact details for all countries are listed in the attached After-sales Service directory.

Thank you for buying a Bosch Home Appliance!

Register your new device on MyBosch now and profit directly from:

- **Expert tips & tricks for your appliance**
- **Warranty extension options**
- **Discounts for accessories & spare-parts**
- **Digital manual and all appliance data at hand**
- **Easy access to Bosch Home Appliances Service**

Free and easy registration – also on mobile phones:
www.bosch-home.com/welcome

Looking for help? You´ll find it here.

Expert advice for your Bosch home appliances, need help with problems or a repair from Bosch experts.
Find out everything about the many ways Bosch can support you:
www.bosch-home.com/service
Contact data of all countries are listed in the attached service directory.

Bosch Home Appliance Group
P.O. Box 83 01 01
D-81701 Munich
Germany
www.bosch-home.com

8001163918 (9908)
en