

Refrigerator

USER INSTRUCTIONS

GKN16910X
GKN16910B
GKN16910DB
GKN16910DX
GKN16910D
GKN16910DG

ENG

www.grundig.co.uk

GRUNDIG

ENG

Contents

1. Safety and environment instructions 5
1.1. General safety 5
1.1.1 HC warning 7
1.1.2 For models with water dispenser 7
1.2. Intended use 7
1.3. Child safety 8
1.4. Compliance with WEEE Directive and Disposing of the Waste Product 8
1.5. Compliance with RoHS Directive 8
1.6. Package information 8

2. Your Refrigerator 9

3. Installation 10
3.1 Appropriate installation location 10
3.2 Installing the plastic wedges 11
3.3 Electrical connection 11

4. Preparation 13
4.1 Things to be done for energy saving 13
4.2 Initial use 13

5. Operating the product 15
5.1 Indicator panel 15
5.2 Freezing fresh food 18
5.3 Recommendations for preserving the frozen food 20
5.4 Placing the food 21
5.5 Deep-freeze information ... 21
5.6 Changing the door opening direction 22
5.7 Open door warning 22
5.8 Changing the illumination lamp 22
5.9 Recommendations for freshfood compartment 22
5.10 Chiller Shelf And Vegetable Compartment 23
5.11 Using the water dispenser 23
5.12 Filling the water dispenser's tank 24
5.13 Cleaning the water tank ... 24
5.14 Drip tray 25

6. Maintenance and cleaning 26
6.1 Avoiding bad odours 26
6.2 Protecting the plastic surfaces 27

7. Troubleshooting 28

Please read these instructions first before using your appliance

Thank you for choosing a Grundig appliance.

Please take some time to read this user manual before using your appliance, to ensure you know how to safely operate the controls and functions.

Carefully follow all unpacking and installation instructions to ensure the appliance is correctly connected and fitted prior to use.

Please write your product model and serial number on the last page of this user manual, and store in a safe location close to the appliance for easy future reference.

This user manual may also be applicable for several other models. Differences between models will be listed.

If you have any questions or concerns, please call our contact centre or find help and information online at www.grundig.co.uk

Symbols and their descriptions

This instruction manual contains the following symbols:

	Important information or useful usage tips.
	Warning against dangerous conditions for life and property.
	Warning against electric voltage.
	Packaging materials of the product are manufactured from recyclable materials in accordance with our National Environment Regulations.

1. Safety and environment instructions

This section provides the safety instructions necessary to prevent the risk of injury and material damage. Failure to observe these instructions will invalidate all types of product warranty.

Intended use

⚠	**WARNING:** Keep ventilation openings, in the appliance enclosure or in the built-instructure, clear of obstruction.
⚠	**WARNING:** Do not use mechanical devices or other means to accelerate the defrosting process, other than those recommended by the manufacturer.
⚠	**WARNING:** Do not damage the refrigerant circuit.
⚠	**WARNING:** Do not use electrical appliances inside the food storage compartments of the appliance, unless they are of the type recommended by the manufacturer.

This appliance is intended to be used in household and similar applications such as
– staff kitchen areas in shops, offices and other working environments;
– farm houses and by clients in hotels, motels and other residential type environments;
– bed and breakfast type environments;
– catering and similar non-retail applications.

1.1. General safety

- This product should not be used by persons with physical, sensory and mental disabilities, without sufficient knowledge and experience or by children. The device can only be used by such persons under supervision and instruction of a person responsible for their safety. Children should not be allowed to play with this device.
- In case of malfunction, unplug the device.
- After unplugging, wait at least 5 minutes before plugging in again.
- Unplug the product when not in use.
- Do not touch the plug with wet hands! Do not pull the cable to plug off, always hold the plug.
- Do not plug in the refrigerator if the socket is loose.
- Unplug the product during installation, maintenance, cleaning and repair.

- If the product will not be used for a while, unplug the product and remove any food inside.
- Do not use the product when the compartment with circuit cards located on the upper back part of the product (electrical card box cover) (1) is open.

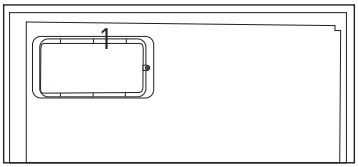

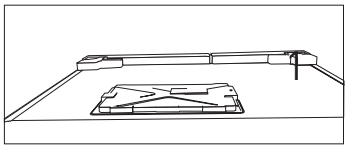

- Do not use steam or steamed cleaning materials for cleaning the refrigerator and melting the ice inside. Steam may contact the electrified areas and cause short circuit or electric shock!
- Do not wash the product by spraying or pouring water on it! Danger of electric shock!
- In case of malfunction, do not use the product, as it may cause electric shock. Contact the authorised service before doing anything.
- Plug the product into an earthed socket. Earthing must be done by a qualified electrician.
- If the product has LED type lighting, contact the authorised service for replacing or in case of any problem.
- Do not touch frozen food with wet hands! It may adhere to your hands!
- Do not place liquids in bottles and cans into the freezer compartment. They may explode.
- Place liquids in upright position after tightly closing the lid.
- Do not spray flammable substances near the product, as it may burn or explode.
- Do not keep flammable materials and products with flammable gas (sprays, etc.) in the refrigerator.
- Do not place containers holding liquids on top of the product. Splashing water on an electrified part may cause electric shock and risk of fire.
- Exposing the product to rain, snow, sunlight and wind will cause electrical danger. When relocating the product, do not pull by holding the door handle. The handle may come off.
- Take care to avoid trapping any part of your hands or body in any of the moving parts inside the product.
- Do not step or lean on the door, drawers and similar parts of the refrigerator. This will cause the product to fall down and cause damage to the parts.

- Take care not to trap the power cable.

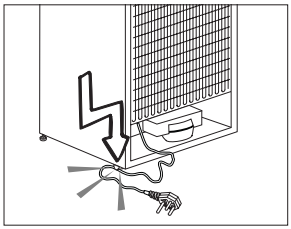

1.1.1 HC warning

If the product comprises a cooling system using R600a gas, take care to avoid damaging the cooling system and its pipe while using and moving the product. This gas is flammable. If the cooling system is damaged, keep the product away from sources of fire and ventilate the room immediately.

The label on the inner left side indicates the type of gas used in the product.

1.1.2 For models with water dispenser

- Pressure for cold water inlet shall be maximum 90 psi (620 kPa). If your water pressure exceeds 80 psi (550 kPa), use a pressure limiting valve in your mains system. If you do not know how to check your water pressure, ask for the help of a professional plumber.
- If there is risk of water hammer effect in your installation, always use a water hammer prevention equipment in your installation. Consult Professional plumbers if you are not sure that there is no water hammer effect in your installation.
- Do not install on the hot water inlet. Take precautions against of the risk of freezing of the hoses. Water temperature operating interval shall be 33°F (0.6°C) minimum and 100°F (38°C) maximum.
- Use drinking water only.

1.2. Intended use

- This product is designed for home use. It is not intended for commercial use.
- The product should be used to store food and beverages only.
- Do not keep sensitive products requiring controlled temperatures (vaccines, heat sensitive medication, medical supplies, etc.) in the refrigerator.
- The manufacturer assumes no responsibility for any damage due to misuse or mishandling.
- Original spare parts will be provided for 10 years, following the product purchasing date.

1.3. Child safety

- Keep packaging materials out of children's reach.
- Do not allow the children to play with the product.
- If the product's door comprises a lock, keep the key out of children's reach.

1.4. Compliance with WEEE Directive and Disposing of the Waste Product

This product complies with EU WEEE Directive (2012/19/EU). This product bears a classification symbol for waste electrical and electronic equipment (WEEE).

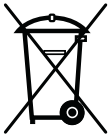

This product has been manufactured with high quality parts and materials which can be reused and are suitable for recycling. Do not dispose of the waste product with normal domestic and other wastes at the end of its service life. Take it to the collection center for the recycling of electrical and electronic equipment. Please consult your local authorities to learn about these collection centers.

1.5. Compliance with RoHS Directive

- This product complies with EU WEEE Directive (2011/65/EU). It does not contain harmful and prohibited materials specified in the Directive.

1.6. Package information

Packaging materials of the product are manufactured from recyclable materials in accordance with our National Environment Regulations. Do not dispose of the packaging materials together with the domestic or other wastes. Take them to the packaging material collection points designated by the local authorities.

2. Your Refrigerator

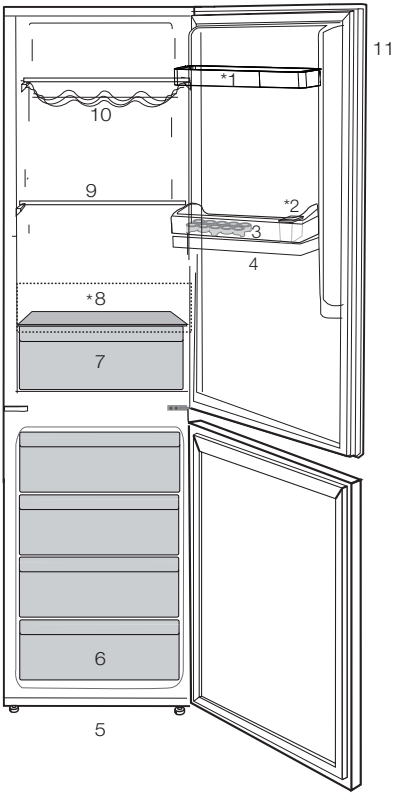

1. Adjustable door shelves
2. Water dispenser filling tank
3. Egg section
4. Water dispenser reservoir
5. Adjustable Front Feet
6. Freezing and Storage (store fresh food to be frozen lower down)
7. Vegetable Compartment
8. Chiller shelf
9. Adjustable shelves
10. Wine rack
11. Indicatör Panel

*** May not be available in all models**

ⓘ	Figures in this user manual are schematic and may not match the product exactly. If the subject parts are not included in the product you have purchased, then those parts are valid for other models.

3. Installation

To make the product ready for use, make sure that the electricity installation is appropriate before calling the Authorised Service Agent. If not, call a qualified electrician to have any necessary arrangements carried out.

	Preparation of the location and electrical installation at the place of installation is under customer's responsibility.
	Product must not be plugged in during installation. Otherwise, there is the risk of death or serious injury!
	**WARNING:** Installation and electrical connections of the product must be carried out by competent persons. Manufacturer shall not be held liable for damages that may arise from procedures carried out by unauthorised persons.
	**WARNING:** Prior to installation, visually check if the product has any defects on it. If so, do not have it installed. Damaged products cause risks for your safety.
	Make sure that the power cable is not pinched or crushed while pushing the product into its place after installation or cleaning procedures.

3.1 Appropriate installation location

- Choose a place at where you can access the product comfortably.
- Install the product at least 30 cm away from heat sources such as hobs, ovens, heater cores and stoves and at least 5 cm away from electrical ovens. Product must not be subjected to direct sun light and kept in humid places after installation.
- Appropriate air ventilation must be provided around your product in order to achieve an efficient operation. If the product is to be placed in a recess in the wall, pay

attention to leave at least 5 cm distance with the ceiling and side walls.
- Do not place the product on materials such as rugs or carpets.
- Place the product on an even floor surface to prevent jolts.
- Your product can operate in ambient temperatures between -5°C to +43°C.

3.2 Installing the plastic wedges

Plastic wedges are used to create the distance for the air circulation between the product and the rear wall. Insert the 2 plastic wedges onto the rear ventilation cover as illustrated in the figure. To install the wedges, push and twist a quarter of a turn.

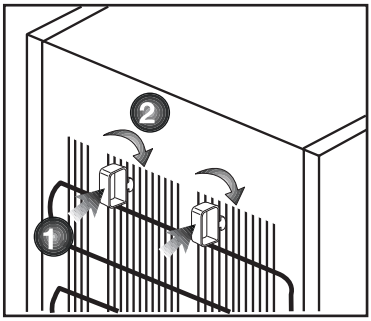

3.3 Electrical connection

Connect the product to a grounded outlet protected by a fuse complying with the values in the rating plate. Our company shall not be liable for any damages that will arise when the product is used without grounding in accordance with the local regulations.
- Electrical connection must comply with national regulations.
- Power cable plug must be within easy reach after installation.
- The voltage and allowed fuse or breaker protection are specified in the Rating Plate which is affixed to interior of the product. If the current value of the fuse or breaker in the house does not comply with the value in the rating plate, have a qualified electrician install a suitable fuse.
- The specified voltage must be equal to your mains voltage.
- WARNING: Do not locate extension sockets or charging transformers/power supplies or Lithium-Iron battery operated products adjacent to the compressor as they could overheat.

- Do not make connections via extension cables or multi-plugs.

	**WARNING:** Damaged power cable must be replaced by the Authorised Service Agents.
	**WARNING:** If the product has a failure, it should not be operated unless it is repaired by the Authorised Service Agent! There is the risk of electric shock!

4. Preparation

4.1 Things to be done for energy saving

⚠	Connecting the product to electric energy saving devices is risky as it may cause damage on the product.

- Do not leave the doors of your Freezer open for a long time.
- Do not put hot food or drinks in your refrigerator.
- Do not overload the Freezer. Cooling capacity will fall when the air circulation inside is hindered.
- Do not place the Freezer in places subject to direct sunlight. Install the product at least 30 cm away from heat sources such as hobs, ovens, heater cores and stoves and at least 5 cm away from electrical ovens.
- Pay attention to store your food in Freezer in closed containers.
- You can load maximum amount of food to the freezer compartment of the Freezer by removing the freezer compartment drawers. Declared energy consumption value of the refrigerator was determined with the freezer compartment drawers removed,except if available bottom drawer and with maximum amount of food loaded. There is no risk in removing a shelf or drawer to make suitable for the shapes and sizes of the foods to be frozen.
- Thawing frozen food in fridge compartment will both provide energy saving and preserve the food quality.

ⓘ	The ambient temperature of the room where you install the Freezer should at least be -5°C. Operating your Freezer under colder conditions than this is not recommended.
ⓘ	Inside of your Freezer must be cleaned thoroughly.

4.2 Initial use

Before starting to use the product, check that all preparations are made in accordance with the instructions in sections "Important instructions for safety and environment" and "Installation".

- Clean the interior of the Freezer as recommended in the “Maintenance and cleaning” section. Check that inside of it is dry before operating it.
- Plug the Freezer into the grounded wall outlet. When the door is opened the interior illumination will turn on.
- Run the Freezer without putting any food for 6 hours and do not open its door unless certainly required.

	You will hear a noise when the compressor starts up. The liquids and gases sealed within the refrigeration system may also give rise to noise, even if the compressor is not running and this is quite normal.
	Front edges of the Freezer may feel warm. This is normal. These areas are designed to be warm to avoid condensation.

	For energy efficiency testing, it is recommmended to remove top shelf and load food on the shelf below.Net volume of your appliance is declared without top two flaps and the top shelf in place.Place two ice pack (if provided) directly on the top of frozen food to be stored on top shelf.

5. Operating the product

5.1 Indicator panel

Indicator panel allows you to set the temperature and control the other functions related to the product without opening the door of the product. Just press the inscriptions on relevant buttons for function settings.

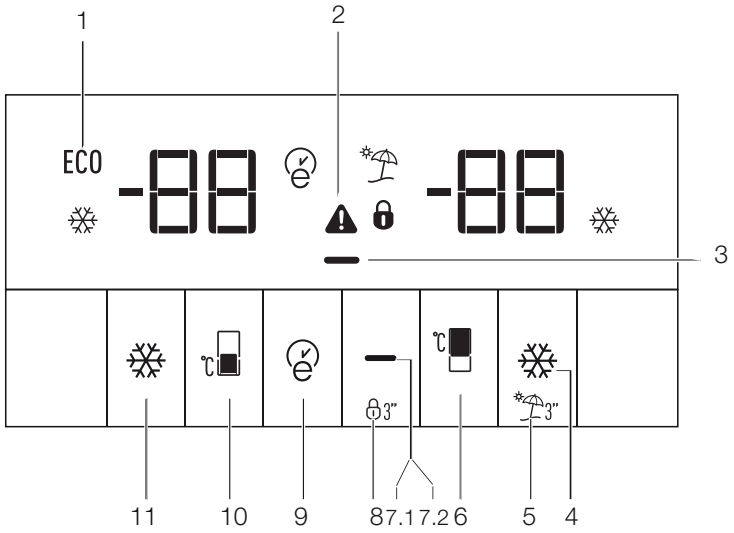

1. Economy
This symbol is illuminated when the freezer compartment is set to -18°C'ye as the most economical setting value (ECO). Economy indicator is turned off when quick cooling or quick freeze functions are selected.

2. Power failure/High temperature / Power Cut Indicator
This indicator (⚠) illuminates during power failure, high temperature failures and error warnings. During sustained power failures, the highest temperature that the freezer compartment reaches will flash on the digital display.

ⓘ	Figures in this user manual are schematic and may not match the product exactly. If the subject parts are not included in the product you have purchased, then those parts are valid for other models.

After checking the food located in the freezer compartment (▬) press the alarm off button to clear the warning.
Please refer to "remedies advised for troubleshooting" section on your manual if you observe that this indicator is illuminated.

3. Energy saving function (display off)

If the product doors are kept closed for a long time energy saving function is automatically activated and energy saving symbol is illuminated.When energy saving function is activated, all symbols on the display other than energy saving symbol will turn off.
When the Energy Saving function is activated, if any button is pressed or the door is opened, energy saving function will be canceled and the symbols on display will return to normal.

4. Quick cool

Quick cooling indicator (❄) is illuminated when quick cooling function is activated and fridge compartment temperature indicator value is displayed as 1. To cancel this function press Quick cooling button again. Quick cooling indicator will turn off and refrigerator will return to its normal settings. Quick cooling function is canceled automatically in 1 hour if you do not cancel it before. If you want to cool large amounts of fresh food, press the Quick cooling button before putting the food into the fridge compartment.

5. Vacation function

Vacation function can be activated for both fridge and freezer compartments separately. In order to activate vacation function for fridge compartment, press the button no. (4) for 3 seconds, and the vacation mode indicator blinks. Then press no. (6) and the vacation mode indicator for fridge activates. When the vacation function is activated, “- -” is displayed for fridge compartment temperature indicator and no active cooling is performed on the fridge compartment. It is not suitable to keep the food in the fridge compartment when this function is activated.

Other compartments shall be continued to be cooled as per their set temperature.To cancel this function press either Vacation function button again or button no. (6)
Similarly, vacation function for freezer compartment can be activated by pressing the button no. (4) for 3 seconds, and after the vacation mode indicator blinks, then press no. (10) and the vacation mode indicator for freezer activates. When the vacation function is activated, "- -" is displayed on the freezer compartment temperature indicator and no active cooling is performed on the freezer compartment. It is not suitable to keep the food in the freezer compartment when this function is activated. Other compartments shall be continued to be cooled as per their set temperature. To cancel this function press no. (10)

6. Fridge compartment temperature setting

When the button no. (5) is pressed, you may set the temperature of the fridge compartment to 8,7,6,5,4,3,2 and 1 respectively ( ).

7.1. Energy saving function (display off):

Energy saving symbol ( ) is illuminated and Energy saving function is activated when you press this button ( ). When energy saving function is activated, all symbols on the display other than energy saving symbol will turn off. When the Energy Saving function is activated, if any button is pressed or the door is opened, energy saving function will be canceled and the symbols on display will return to normal. Energy saving symbol is turned off and energy saving function is deactivated when you press this button ( ) again.

7.2.Alarm off warning:

In case of power failure/high temperature alarm, after checking the food located in the freezer compartment press the alarm off button to clear the warning.

8. Key lock

Press key lock button ( ) simultaneously for 3 seconds. Key lock symbol ( ) will light up and key lock mode will be activated. Buttons will not function if the Key lock mode is active. Press key lock button simultaneously for 3 seconds

again. Key lock symbol will turn off and the key lock mode will be exited.Press the **key lock** button if you want to prevent changing of the temperature setting of the refrigerator ( ).

9. Eco fuzzy

Press and hold eco fuzzy button for 1 seconds to activate eco fuzzy function. Refrigerator will start operating in the most economic mode at least 6 hours later and the economic usage indicator will turn on when the function is active ( ). Press and hold eco fuzzy function button for 3 seconds to deactivate eco fuzzy function. This indicator is illuminated after 6 hours when eco fuzzy is activated.

10. Freezer compartment temperature setting

Temperature setting for freezer compartment is performed here. When button no. 9 is pressed, you may set the temperature of the freezer compartment to -18, -19, -20, -21, -22, -23 and -24 respectively.

11. Fast freeze

Press button no. (10) for fast freeze operation, quick freeze indicator ( ) shall be activated. Quick freeze indicator is illuminated when quick freeze function is activated and fridge compartment temperature indicator is displayed as -27. To cancel this function press quick freeze button ( ) again. Quick freeze indicator will turn off and refrigerator will return to its normal settings. Quick freeze function is canceled automatically in 24 hour if you do not cancel it before. If you want to freeze large amounts of fresh food, press the quick freeze button before putting the food into the freezer compartment.

5.2 Freezing fresh food

- Wrap the food or place them in a covered container before putting them in the refrigerator.
- Hot food and beverages must cool down to the room temperature before putting them in the refrigerator.
- The food that you want to freeze must be fresh and in good quality.

- Divided the food into portions according to your family's daily or meal based consumption needs.
- Pack the food in an airtight manner to prevent them from drying even if they are going to be stored for a short time.
- Materials to be used for packaging must be tear-proof and resistant to cold, humidity, odour, oils and acids and they must also be airtight. Moreover, they must be well closed and they must be made from easy-to-use materials that are suitable for deep-freezers.
- Take special care not to mix already frozen food and fresh food.(They should not to be allowed to come in contact with the previously frozen items to prevent their partial thawing.)
- Frozen food must be used immediately after they are thawed and they should never be re-frozen.
- Do not freeze too large quantities of food at one time. The quality of the food is best preserved when it is frozen right through to the core as quickly as possible.
- Placing warm food into the freezer compartment causes the cooling system to operate continuously until the food is frozen solid.
- Maximum frozen food storage volume is achieved without using the drawers and the upper shelf cover provided in the freezer compartment. Energy consumption of your appliance is declared while the freezer compartment is fully loaded on shelves without the use of the drawers and upper shelf cover. Use the given wire shelf at the bottom of the freezer compartment for a better energy consumption performance.
- It is recommended that you place foodstuffs on top shelf of freezer for initial freezing.

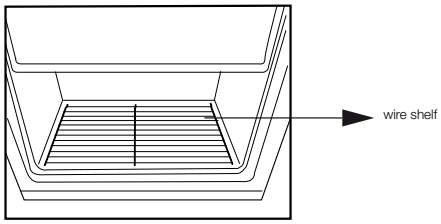

Freezer Compartment Setting	Fridge Compartment Setting	Explanations
-18°C	4°C	This is the normal recommended setting.
-20, -24 or -24°C	4°C	These settings are recommended when the ambient temperature exceeds 30°C.
Fast Freeze	4°C	Use when you wish to freeze your food in a short time. Your refrigerator will return to its previous mode when the process is over.
-18°C or colder	2°C	Use these settings if you think that your fridge compartment is not cold enough because of the hot ambient conditions or frequent opening and closing of the door.
-18°C or colder	Quick Cool	Use this function when you place a lot of food into the fridge compartment or when you need to cool your food quickly. It is recommended that you activate Quick Cool function 4-8 hours before placing the food.

5.3 Recommendations for preserving the frozen food

- Frozen food that you have purchased should be stored in accordance with the frozen food manufacturer's instructions for a ******** (4 star) frozen food storage compartment.
- Note the following to ensure that the high quality achieved by the frozen food manufacturer and the food retailer is maintained:
  1. Put packets in the freezer as quickly as possible after purchase.
  2. Make sure that contents of the package are labelled and dated.

3. Check whether the "Use By" and "Best Before" dates on the packaging are exceed or not.

5.4 Placing the food

Freezer compartment shelves	Various frozen food such as meat, fish, ice cream, vegetables and etc.
Egg holder	Egg
Fridge compartment shelves	Food in pans, covered plates and closed containers
Fridge compartment door shelves	Small and packaged food or beverage (such as milk, fruit juice, beer and etc.)
Crisper	Vegetables and fruits
Fresh zone compartment	Delicatessen products (cheese, butter, salami and etc.)

5.5 Deep-freeze information

Food must be frozen as rapidly as possible when they are put in a refrigerator in order to keep them in good quality.
It is possible to preserve the food for a long time only at -18°C or lower temperatures.
You can keep the freshness of food for many months (at -18°C or lower temperatures in the deep freeze).

ⓘ	Divide the food into portions according to your family's daily or meal based consumption needs.
ⓘ	Pack the food in an airtight manner to prevent them from drying even if they are going to be stored for a short time.

- Materials necessary for packaging:
- Cold resistant adhesive tape
- Self adhesive label
- Rubber rings
- Pen

Materials to be used for packaging the foodstuff must be tear-proof and resistant to cold, humidity, odour, oils and acids.

Foods to be frozen should not be allowed to come in contact with the previously frozen items to prevent them from getting thawed partially.

ⓘ	Frozen food must be used immediately after they are thawed and they should never be re-frozen.

5.6 Changing the door opening direction

Door opening direction of your refrigerator can be changed according to the place you are using it. If this is necessary, please call your nearest Authorized Service.

5.7 Open door warning

*** May not be available in all models**

An audio warning will be given when the fridge compartment door of your product is left open for a certain period of time. This audio warning signal will mute when any button on the indicator is pressed or when the door is closed.

5.8 Changing the illumination lamp

To change the Bulb/LED used for illumination of your refrigerator, call your AuthorisedService.

The lamp(s) used in this appliance is not suitable for household room illumination. The intended purpose of this lamp is to assist the user to place foodstuffs in the refrigerator/freezer in a safe and comfortable way.The lamps used in this appliance have to withstand extreme physical conditions such as temperatures below -20 °C. (only chest and upright freezer)

5.9 Recommendations for freshfood compartment

*** May not be available in all models**

Please do not let any foodstuff come into contact with the temperature sensor in the freshfood compartment. In order to maintain the freshfood compartment at an ideal storage temperature, the sensor must not be blocked.

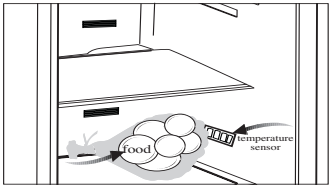

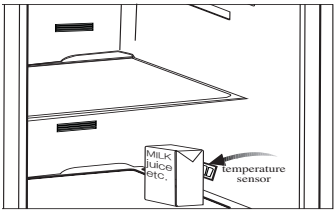

5.10 Chiller Shelf And Vegetable Compartment

The vegetable compartment provides the optimum conditions for fruit, vegetables and salad. Above this, the glass Chiller shelf is ideal for storing wrapped meat and fish.

5.11 Using the water dispenser

**** May not be available in all models**

ⓘ	It is normal for the first few glasses of water taken from the dispenser to be warm.
ⓘ	If the water dispenser is not used for a long period of time, dispose of first few glasses of water to obtain fresh water.

1. Push in the lever of the water dispenser with your glass. If you are using a soft plastic cup, pushing the lever with your hand will be easier.
2. After filling the cup up to the level you want, release the lever.

ⓘ	Please note, how much water flows from the dispenser depends on how far you depress the lever. As the level of water in your cup / glass rises, gently reduce the amount of pressure on the lever to avoid overflow. If you slightly press the arm, the water will drip; this is quite normal and not a failure.

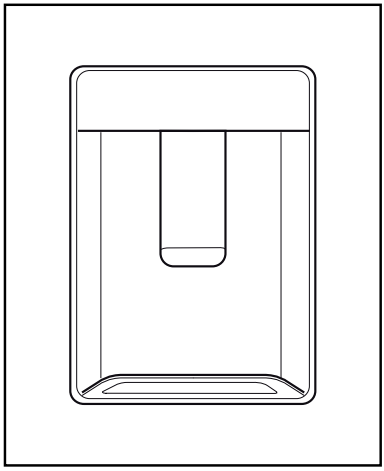

5.12 Filling the water dispenser's tank

Water tank filling reservoir is located inside the door rack.

1. Open the cover of the tank.
2. Fill the tank with fresh drinking water.
3. Close the cover.

ⓘ	Do not fill the water tank with any other liquid except for water such as fruit juices, carbonated beverages or alcoholic drinks which are not suitable to use in the water dispenser. Water dispenser will be irreparably damaged if these kinds of liquids are used. Warranty does not cover such usages. Some chemical substances and additives contained in these kinds of drinks/ liquids may damage the water tank.

ⓘ	Use clean drinking water only.

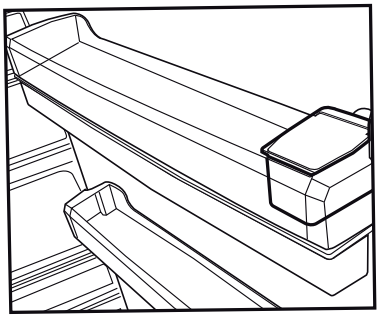

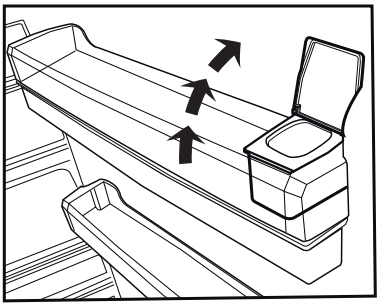

ⓘ	Capacity of the water tank is 3 litres; do not overfill.

5.13 Cleaning the water tank

1. Remove the water filling reservoir inside the door rack.
2. Remove the door rack by holding from both sides.
3. Grab the water tank from both sides and remove it with an angle of 45°C.
4. Remove the cover of the water tank and clean the tank.

ⓘ	Components of the water tank and water dispenser should not be washed in dishwasher.

5.14 Drip tray

Water that dripped while using the water dispenser accumulates in the spillage tray.
Remove the plastic filter as shown in the figure.
With a clean and dry cloth, remove the water that has accumulated.

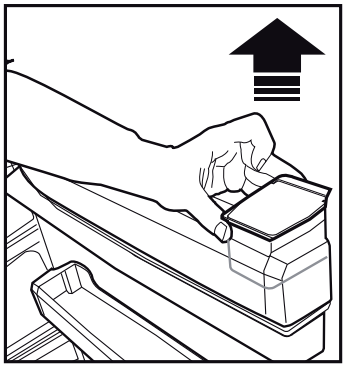

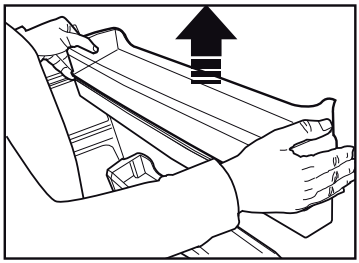

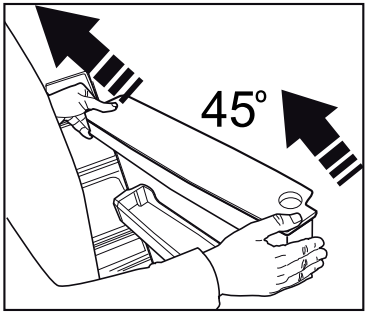

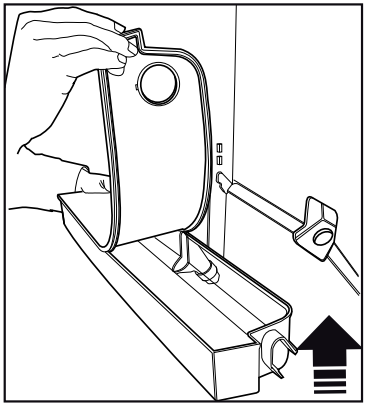

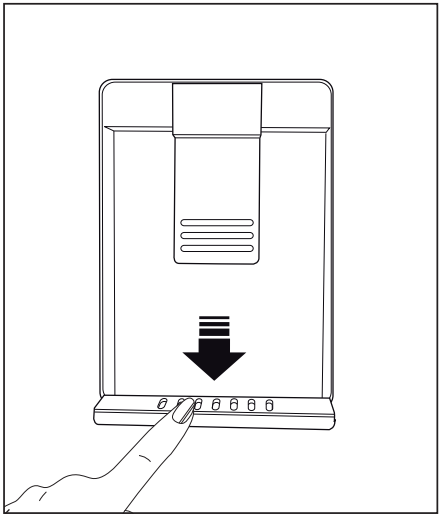

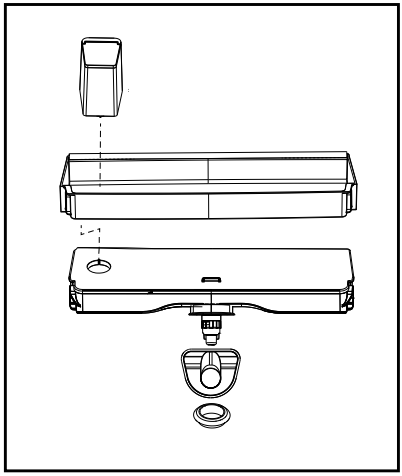

6. Maintenance and cleaning

Cleaning your fridge at regular intervals will extend the service life of the product.

WARNING:

Unplug the product before cleaning it.

- Never use gasoline, benzene or similar substances for cleaning purposes.
- Never use any sharp and abrasive tools, soap, household cleaners, detergent and wax polish for cleaning.
- For non-No Frost products, water drops and frosting up to a fingerbreadth occur on the rear wall of the Fridge compartment. Do not clean it; never apply oil or similar agents on it.
- Only use slightly damp microfiber cloths to clean the outer surface of the product. Sponges and other types of cleaning cloths may scratch the surface
- Dissolve one teaspoon of bi-carbonate in half litre of water. Soak a cloth with the solution and wrung it thoroughly. Wipe the interior of the refrigerator with this cloth and the dry thoroughly.
- Make sure that no water enters the lamp housing and other electrical items.
- If you will not use the refrigerator for a long period of time, unplug it, remove all food inside, clean it and leave the door ajar.
- Check regularly that the door gaskets are clean. If not, clean them.
- To remove door and body shelves, remove all of its contents.
- Remove the door shelves by pulling them up. After cleaning, slide them from top to bottom to install.
- Never use cleaning agents or water that contain chlorine to clean the outer surfaces and chromium coated parts of the product. Chlorine causes corrosion on such metal surfaces.

6.1 Avoiding bad odours

- Materials that may cause odour are not used in the production of our refrigerators. However, due to inappropriate food preserving conditions and not cleaning the inner surface of the refrigerator as required

can bring forth the problem of odour. Pay attention to following to avoid this problem:

- Keeping the refrigerator clean is important. Food residuals, stains, etc. can cause odour. Therefore, clean the refrigerator with bicarbonate dissolved in water every few months. Never use detergents or soap.
- Keep the food in closed containers. Microorganisms spreading out from uncovered containers can cause unpleasant odours.
- Never keep the food that have passed best before dates and spoiled in the refrigerator.

6.2 Protecting the plastic surfaces

Do not put liquid oils or oil-cooked meals in your refrigerator in unsealed containers as they damage the plastic surfaces of the refrigerator. If oil is spilled or smeared onto the plastic surfaces, clean and rinse the relevant part of the surface at once with warm water.

7. Troubleshooting

Check this list before contacting the service. Doing so will save you time and money. This list includes frequent complaints that are not related to faulty workmanship or materials. Certain features mentioned herein may not apply to your product.

The refrigerator is not working.

- The power plug is not fully settled. >>> Plug it in to settle completely into the socket.
- The fuse connected to the socket powering the product or the main fuse is blown. >>> Check the fuses.

Condensation on the side wall of the cooler compartment (MULTI ZONE, COOL, CONTROL and FLEXI ZONE).

- The door is opened too frequently >>> Take care not to open the product's door too frequently.
- The environment is too humid. >>> Do not install the product in humid environments.
- Foods containing liquids are kept in unsealed holders. >>> Keep the foods containing liquids in sealed holders.
- The product's door is left open. >>> Do not keep the product's door open for long periods.
- The thermostat is set to too low temperature. >>> Set the thermostat to appropriate temperature.

Compressor is not working.

- In case of sudden power failure or pulling the power plug off and putting back on, the gas pressure in the product's cooling system is not balanced, which triggers the compressor thermic safeguard. The product will restart after approximately 6 minutes. If the product does not restart after this period, contact the service.
- Defrosting is active. >>> This is normal for a fully-automatic defrosting product. The defrosting is carried out periodically.
- The product is not plugged in. >>> Make sure the power cord is plugged in.
- The temperature setting is incorrect. >>> Select the appropriate temperature setting.
- The power is out. >>> The product will continue to operate normally once the power is restored.

The refrigerator's operating noise is increasing while in use.

- The product's operating performance may vary depending on the ambient temperature variations. This is normal and not a malfunction.

The refrigerator runs too often or for too long.

- The new product may be larger than the previous one. Larger products will run for longer periods.
- The room temperature may be high. >>> The product will normally run for long periods in higher room temperature.
- The product may have been recently plugged in or a new food item is placed inside. >>> The product will take longer to reach the set temperature when recently plugged in or a new food item is placed inside. This is normal.
- Large quantities of hot food may have been recently placed into the product. >>> Do not place hot food into the product.
- The doors were opened frequently or kept open for long periods. >>> The warm air moving inside will cause the product to run longer. Do not open the doors too frequently.
- The freezer or cooler door may be ajar. >>> Check that the doors are fully closed.
- The product may be set to temperature too low. >>> Set the temperature to a higher degree and wait for the product to reach the adjusted temperature.
- The cooler or freezer door washer may be dirty, worn out, broken or not properly settled. >>> Clean or replace the washer. Damaged / torn door washer will cause the product to run for longer periods to preserve the current temperature.

The freezer temperature is very low, but the cooler temperature is adequate.

- The freezer compartment temperature is set to a very low degree. >>> Set the freezer compartment temperature to a higher degree and check again.

The cooler temperature is very low, but the freezer temperature is adequate.

- The cooler compartment temperature is set to a very low degree. >>> Set

the freezer compartment temperature to a higher degree and check again.

The food items kept in cooler compartment drawers are frozen.

- The cooler compartment temperature is set to a very low degree. >>> Set the freezer compartment temperature to a higher degree and check again.

The temperature in the cooler or the freezer is too high.

- The cooler compartment temperature is set to a very high degree. >>> Temperature setting of the cooler compartment has an effect on the temperature in the freezer compartment. Wait until the temperature of relevant parts reach the sufficient level by changing the temperature of cooler or freezer compartments.
- The doors were opened frequently or kept open for long periods. >>> Do not open the doors too frequently.
- The door may be ajar. >>> Fully close the door.
- The product may have been recently plugged in or a new food item is placed inside. >>> This is normal. The product will take longer to reach the set temperature when recently plugged in or a new food item is placed inside.
- Large quantities of hot food may have been recently placed into the product. >>> Do not place hot food into the product.

Shaking or noise.

- The ground is not level or durable. >>> If the product is shaking when moved slowly, adjust the stands to balance the product. Also make sure the ground is sufficiently durable to bear the product.
- Any items placed on the product may cause noise. >>> Remove any items placed on the product.

The product is making noise of liquid flowing, spraying etc.

- The product's operating principles involve liquid and gas flows. >>> This is normal and not a malfunction.

There is sound of wind blowing coming from the product.

- The product uses a fan for the cooling process. This is normal and not a malfunction.

There is condensation on the product's internal walls.

- Hot or humid weather will increase icing and condensation. This is normal and not a malfunction.
- The doors were opened frequently or kept open for long periods. >>> Do not open the doors too frequently; if open, close the door.
- The door may be ajar. >>> Fully close the door.

There is condensation on the product's exterior or between the doors.

- The ambient weather may be humid, this is quite normal in humid weather. >>> The condensation will dissipate when the humidity is reduced.

The interior smells bad.

- The product is not cleaned regularly. >>> Clean the interior regularly using sponge, warm water and carbonated water.
- Certain holders and packaging materials may cause odour. >>> Use holders and packaging materials without free of odour.
- The foods were placed in unsealed holders. >>> Keep the foods in sealed holders. Micro-organisms may spread out of unsealed food items and cause malodour. Remove any expired or spoilt foods from the product.

The door is not closing.

- Food packages may be blocking the door. >>> Relocate any items blocking the doors.
- The product is not standing in full upright position on the ground. >>> Adjust the stands to balance the product.
- The ground is not level or durable. >>> Make sure the ground is level and sufficiently durable to bear the product.

The vegetable bin is jammed.

- The food items may be in contact with the upper section of the drawer. >>> Reorganize the food items in the drawer.

If The Surface Of The Product Is Hot.

- High temperatures may be observed between the two doors, on the side panels and at the rear grill while the product is operating. This is normal and does not require service maintenance!Be careful when touching these areas.

⚠ **WARNING:**

If the problem persists after following the instructions in this section, contact your vendor or an Authorised Service. Do not try to repair the product.

GRUNDIG UK AND IRELAND STANDARD MANUFACTURER GUARANTEE TERMS AND CONDITIONS

Your new Grundig product is guaranteed against faulty materials, defective components or manufacturing defects.

The standard guarantee starts from the date of original purchase of the product, and lasts for a period of thirty six (36) months unless Beko plc (the "Manufacturer") agrees to extend the guarantee for the product in writing.

If you have registered the product within 90 days of purchase by completing the online registration form, then the standard 36 month guarantee will be extended to 60 months, under the same terms and conditions as detailed below

If you have any questions about the guarantee on your product (including how long it is valid), please contact your retailer or our contact centre on **0333 207 9920** (UK and Northern Ireland) or **01 691 0203** (Republic of Ireland)

This guarantee does not in any way diminish or affect your statutory rights in connection with the product. This guarantee is in addition to your statutory rights as a consumer. If you have any questions about these rights, please contact the retailer from which you purchased the product. In certain circumstances, it is possible that your statutory rights may offer additional or higher levels of protection than those offered under the terms of this guarantee.

What is covered by this guarantee?

- Repairs to the product required as a result of faulty materials, defective components or manufacturing defects.
- Functional replacement parts to repair a product.
- The costs of a Grundig Approved Engineer to carry out the repair.

What is not covered?

- Transit and delivery damage.
- Cabinet or appearance parts, including but not limited to control knobs, flaps and handles.
- Accessories and/or consumable items including but not limited to ice trays, scrapers, cutlery baskets, filters and light bulbs.
- Repairs necessary as a direct or indirect result of:

-Accidental damage, misuse or abuse of a product.

-An attempted repair of a product by anyone other than a Grundig Approved Engineer (the "Engineer").

-Installation or use of a product where such installation or use fails to meet the requirements contained in this guarantee or the User Instructions Booklet.

- Repairs to a product operated at any time on commercial or non-residential household premises (unless we have previously agreed to the installation environment).

This guarantee is limited to the cost of repairing the product. To the extent permitted by law, the Manufacturer does not accept and will not be held liable for any financial loss incurred in connection with the failure of any product to operate in accordance with the expected standards. Such financial loss includes but is not limited to loss arising from:

- Time taken off work.
- Damaged food, clothing or other items.
- Meals taken at restaurants or from takeaways.
- General compensation for inconvenience.

Important Notes

1. Your product is designed and built for domestic household use only.
2. The guarantee will automatically be void if the product is installed or is used in commercial or non-residential domestic household premises, unless we have previously agreed to the installation environment.
3. The product must be correctly installed, located and operated in accordance with the instructions contained in the User Instructions Booklet provided with your product.

4. Professional installation by a qualified Electrical Domestic Appliance Installer is recommended for all Washing Machines, Dishwashers and Electric Cookers (as incorrect installation may result in you having to pay for the cost of repairing the product).
5. Gas Cookers must be professionally installed by a Gas Safe (or Gas Networks Ireland for Republic of Ireland) registered gas installer.
6. This guarantee is given in respect of products purchased and used within the United Kingdom and the Republic of Ireland.
7. This guarantee is effective from the initial date of purchase of a new product from an authorised retailer and will be void if the product is resold.
8. This guarantee does not apply to graded sales (where the product is purchased as a "second").
9. Possession of a copy of these terms and conditions does not necessarily mean that a product has the benefit of this guarantee. If you have any questions, please call our Call Centre on the number set out above.
10. The Manufacturer reserves the right to terminate the guarantee if its staff or representatives are subjected to physical or verbal abuse in the course of carrying out their duties.
11. Optional extras, where available (i.e. extendable feet) are supplied on a chargeable basis only.

Does Grundig offer replacements?

This is a repair-only guarantee. On occasion, the Manufacturer may at its sole discretion, replace your product with a new product instead of carrying out a repair. Where a replacement is offered, this would normally be an identical model but when this is not possible, a model of similar specification will be provided. The Manufacturer will cover the costs and arrange for the delivery of the new product and for the return of the old product. Any costs related to disconnecting the faulty product and installing

the replacement product will not be borne by the Manufacturer unless previously agreed to in writing. The original guarantee will continue to apply to the replacement product; the new product will not come with a new guarantee.

When will the repair take place?

Our Engineers work Monday to Friday 9.00am to 5.00pm. Appointments outside these hours may be possible at the sole discretion of the Manufacturer but cannot be guaranteed. Whilst our Engineers will endeavour to minimize inconvenience and to meet requests for specific timed appointments, this cannot be guaranteed. We will not be liable for delays or if it is unable to carry out a repair because a convenient appointment cannot be arranged.

Will there be any charge for the repairs?

It is your responsibility to provide evidence to the Engineer that your product is covered by this guarantee with a proof of purchase. The Manufacturer reserves the right to charge for the reasonable cost of any service call if:

- You cannot provide evidence that your product is covered by this guarantee.
- Where a service call has been made and the engineer finds that there is no fault with your product.
- That your product has not been installed or operated in accordance with the User Instructions Booklet.
- That the fault was caused by something other than faulty materials, defective components or manufacturing defects.
- For missed appointments.

Payment of these costs are due immediately upon the Engineer providing you with an invoice. The Manufacturer reserves the right to terminate the guarantee if you fail to pay the costs for the service call in a timely manner.

If you are a resident of the United Kingdom, this guarantee will be governed by English law and subject to the English Courts, save where you live in another part of the United Kingdom, in which case the law and courts of that location will apply.
If you are resident in the Republic of Ireland, this guarantee will be governed by Irish law and the Irish courts will have jurisdiction.

This guarantee is provided by Beko plc. Beko House, 1 Greenhill Crescent, Watford, Hertfordshire. WD18 8QU.

Beko plc is registered in England and Wales with company registration number 02415578.

GRUNDIG UK AND IRELAND ECO INVERTER MOTOR GUARANTEE TERMS AND CONDITIONS

This 10 year guarantee relates to Grundig products that feature the Eco Inverter Motor.

The Eco Inverter Motor guarantee terms and conditions are in addition to our Standard guarantee terms and conditions detailed in the previous section.

In order to activate the 10 year guarantee you MUST register the appliance within 90 days of the original purchase date. You can register by first visiting grundig.co.uk/register and by following the online instructions.

Grundig Free standing and Built-in appliances come with a 36 month parts and labour guarantee as standard, which can be extended to a 60 months parts and labour guarantee by registering within 90 days of the original purchase date
To make a claim against your Grundig Eco Inverter Motor Guarantee (the "Guarantee"), all customer and product details must be registered with Beko plc using the procedure outlined below.

1. This extra 7 years (or 5 years for appliances registered within 90 days of the original purchase date) Guarantee is only effective after the expiration of the standard manufacturer's guarantee.
2. It is only valid for the Eco Inverter motors of selected washing machines, washer-dryers, tumble dryers and dishwashers. It does not cover any labour charge or any other components of the product. In addition, it is only valid for one replacement of the Eco Inverter motor during the extra 7 years (or 5 years for appliances registered within 90 days of the original purchase date) guarantee period.
3. To activate your guarantee, you MUST register your appliance within 90 days of the original purchase date, by visiting Grundig.co.uk/register.
4. Customers will receive a unique reference code as proof of guarantee validation by email or post, which must be quoted at the time of a claim being made.
5. Any repair/replacement of the Eco Inverter motor must only be carried out by an authorised Grundig Service Agent (the "Service Agent").
6. Labour for the repair/replacement of the Eco Inverter motor is not included in this guarantee and is chargeable directly by the Service Agent.
7. Any additional components fitted to the product at any time will not be covered by this guarantee and will be chargeable directly by the Service Agent.
8. The guarantee is not transferable and cannot be exchanged for cash.
9. There are no alternative or additional offers to this Guarantee.
10. The guarantee is exclusive of the manufacturer's standard guarantee.
11. The Terms and Conditions shown above are in addition to the standard terms and conditions of your product guarantee. Please read and refer to such Terms and Conditions when making any claim.

12. We may use the information you provide for marketing purposes and to analyse your purchasing preferences. We may keep your information for a reasonable period for these purposes in accordance with the applicable Data Protection Laws and General Data Protection Regulations (GDPR). You can opt into this service during the registration process. Further details are available at http://www.Grundig.co.uk/cookie-and-privacy.
13. These Terms and Conditions are governed by the laws of England and Wales; manufacturer: Beko plc, Beko House, 1 Greenhill Crescent, Watford WD18 8QU. Company Registration Number: 02415578.

HOW TO OBTAIN SERVICE FOR YOUR APPLIANCE

Please keep your purchase receipt or other proof of purchase details in a safe place; you will need to have this documentation available should the product require attention under guarantee.

Please take a few moments to complete the details below, as you will need this information when you call us, or to use our online services. When you call us you may be required to input your serial number into your telephone keypad. For help please visit grundig.co.uk/support/model-finder

- The product model number is printed on the Operating Instruction Booklet / User guide
- The product model and serial number is printed on the Rating Label affixed to the appliance.
- The Retailer (Purchased from) and Date of purchase will be printed on your purchase receipt or other proof of purchase paperwork

Recording of these details alone will not count as proof of purchase. A valid proof of purchase is required for requesting service under guarantee.

Model number Serial number Purchased from Date of purchase

For service under guarantee or for product advice please call our Contact centre

Before requesting service please check the troubleshooting guide in the Operating Instructions booklet, as a charge may be levied where no fault is found, and even though your product may still be under guarantee.

After arranging service the area around the product must be easily accessible to the Engineer, without the need for cabinets or furniture to be removed or moved.

It is your responsibility to ensure our Engineers have a clean and safe environment to carry out any repairs.

Please have your Model number and Serial number available when you call us, as you may be required to input your serial number into your telephone keypad during your call.

UK Mainland & Northern Ireland:

0333 207 9920

Landline or mobile calls to 0333 numbers cost no more than calls to geographic numbers 01 or 02, and are charged at the basic rate. Calls from landlines and mobiles are included in free call packages but please check with your telephone service provider for exact call charges.

Republic of Ireland:

01 691 0203

Service once the manufacturers guarantee has expired

If you have purchased an extended guarantee please refer to the instructions contained within the extended guarantee agreement document, otherwise please call us using the appropriate number above, where service can be obtained at a charge.

Should you experience any difficulty in obtaining service please call us on

0333 207 9920 or **01 691 0203**

Contact us though our website

Send us a secure message through our online contact us form. Please visit our website, click Contact Us and choose a product support topic from the list of options. Complete the required details and click send message.

Product registrations

For UK and Republic of Ireland product registrations please visit grundig.co.uk/register.

Notes

Notes

GRUNDIG

www.grundig.co.uk

57 7944 0000/ AF