Magic Chef™
SO RIGHT AT HOME.™

3.5 CU.FT. REFRIGERATOR
INSTRUCTION MANUAL

Model No.: HMBR350WE
HMBR350BE
HMBR350SE

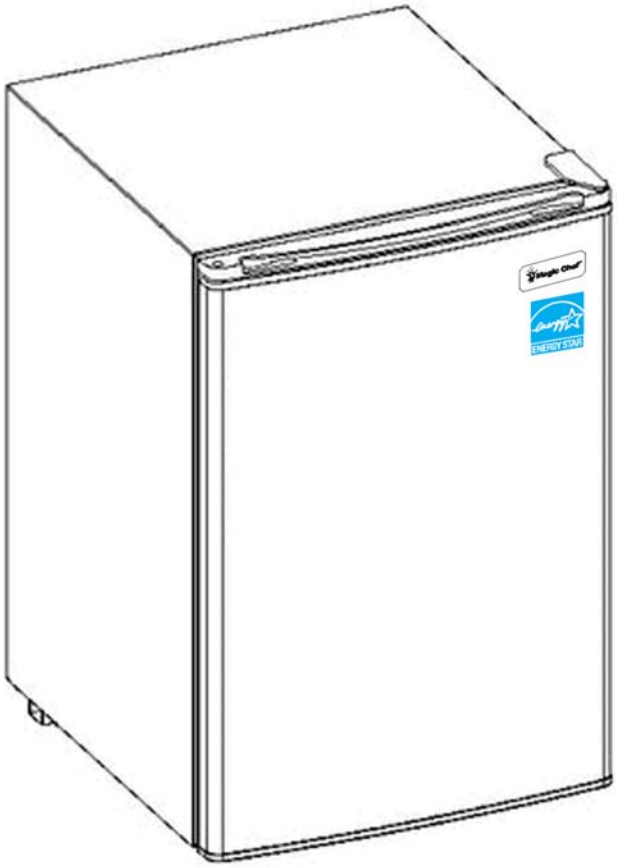

To ensure proper use of this appliance and your safety, please read the following instructions completely before operating this appliance.

Product Registration Copy

Thank you for purchasing a Magic Chef product. The first step in protecting your new product is to complete the product registration form on our website at **www.mcappliance.com/register** .The benefits of registering your product include the following.

1. Registering your product will allow us to contact you regarding a safety notification or product update.

2. In the event that warranty service is required, registering your product w allow for more efficient warranty service processing.

3. In the event of an insurance loss registering your product could act as your proof of purchase.

Once again thank you for purchasing a Magic Chef product.

TABLE OF CONTENTS

NAMES OF THE PARTS..... 3

SPECIFICATIONS..... 3

IMPORTANT SAFETY INSTRUCTIONS..... 4

INSTALLATION INSTRUCTION

- BEFORE USING YOUR REFRIGERATOR 4
- INSTALLING YOUR REFRIGERATOR 4
- ELECTRICAL CONNECTION..... 5

OPERATING YOUR REFRIGERATOR

- TEMPERATURE CONTROL..... 6
- THE CHILLER COMPARTMENT..... 6
- HOW TO DEFROST 6
- HOW TO CHANGE THE INTERIOR LIGHT..... 7

CARE AND MAINTENANCE

- CLEANING YOUR REFRIGERATOR..... 8
- VACATION TIME..... 8
- MOVING YOUR REFRIGERATOR..... 8
- ENERGY SAVING TIPS..... 8

TROUBLESHOOTING GUIDE..... 9-10

REFRIGERATOR WARRANTY..... 11

NAMES OF THE PARTS

MODEL NO. HMBR350WE/HMBR350BE/ HMBR350SE

(1) Shelf
(2) Freezer Compartment
(3) Drain Pan
(4) Temperature Control Box
(5) Temperature Control Dial
(6) Can Dispenser
(7) Rack
(8) Bottle Rack
(9) Door Liner

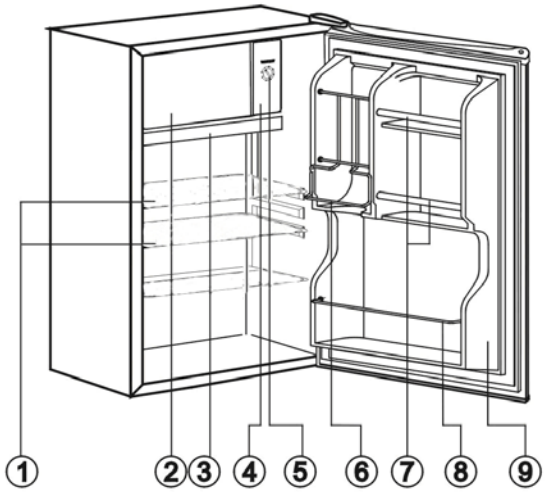

WARNING: Never touch the interior of the Freezer Chamber or frozen foods in the compartment with wet hands as this could result in frost bite.

SPECIFICATIONS
Model # HMBR350WE/HMBR350BE/ HMBR350SE

Product Description	Magic Chef Refrigerator		
Model No.	HMBR350WE /HMBR350BE/ HMBR350SE		
Capacity	3.5 Cu. Ft.		
Unit Dimensions (inches)	Width	Height	Depth
	18.5”	32.5“	19.25”
Net Weight (lbs)	48 (lbs)		

IMPORTANT SAFETY INSTRUCTIONS

⚡WARNING⚡	To reduce the risk of fire, electrical shock, or injury when using your refrigerator, follow these basic precautions:

- Read all instructions before using the refrigerator.
- **DANGER or WARNING:** Risk of child entrapment.
- To avoid the possibility of child entrapment, please take the following precautions before throwing out the refrigerator.
    - Remove all doors from the unit.
    - Leave the shelves in place so that children may not easily climb inside.
- Never allow children to operate, play with, or crawl inside the refrigerator.
- **Refrigerants:** All refrigeration products contain refrigerants, which under the guidelines of federal law must be removed before disposal of product. It is the consumer's responsibility to comply with federal and local regulations when disposing of this product.
- Never clean refrigerator parts with flammable fluids. The fumes can create a fire hazard or explosion.
- Do not store or use gasoline or any other flammable vapors and liquids in the vicinity of this or any other refrigerator. The fumes can create a fire hazard or an explosion.

-Save these instructions-

INSTALLATION INSTRUCTIONS

Before Using Your Refrigerator

- Remove the exterior and interior packing.
- Before connecting the refrigerator to the power source, let it stand upright for approximately 4 hours. This will reduce the possibility of a malfunction in the cooling system from improper handling during transportation.
- Clean the interior surface with lukewarm water using a soft cloth. (Cleaning instruction on page8)

Installing Your Refrigerator

- This appliance is designed to be free standing only, and should not be recessed or built-in.
- Place your refrigerator on a floor that is strong enough to support the refrigerator when it is fully loaded.
- Allow 5 inches of space between the back and sides of the refrigerator, which allows the proper air ventilation. Adjust the feet to keep the refrigerator level.
- Locate the refrigerator away from direct sunlight and sources of heat (stove, heater, radiator, etc.). Direct sunlight may affect the acrylic coating and heat sources may increase electrical consumption. Ambient temperature below 50°F (10°C) or above 85°F (29.4°C) will hinder the performance of this appliance. **This unit is not designed for use in a garage or any other outside installation.**
- Avoid locating the refrigerator in moist areas.
- Plug the refrigerator into dedicated, properly installed-grounded wall outlet. Do not under any circumstances cut or remove the third (ground) prong from the power cord. Any questions concerning power and/or grounding should be directed toward a certified electrician or an authorized service center. **This unit is not designed to be installed in an RV or used with an inverter.**
- After plugging the appliance into a wall outlet, turn the unit on and allow the unit to cool down for 2~3 hours under before placing food in the refrigerator or freezer compartment.

Electrical Connection

WARNING

Improper use of the grounded plug can result in the risk of electrical shock. If the power cord is damaged, have it replaced by an authorized service center.

This refrigerator should be properly grounded for your safety. The power cord of this refrigerator is equipped with a three-prong plug which mates with standard three prong wall outlets to minimize the possibility of electrical shock.

Do not, under any circumstances, cut or remove the third ground prong from the power cord supplied.

This refrigerator requires a standard 115/120 Volt A.C. ~/60Hz electrical outlet with three-prong ground.

This refrigerator is not designed to be used with an inverter.

The cord should be secured behind the refrigerator and not left exposed or dangling to prevent accidental injury.

Never unplug the refrigerator by pulling the power cord. Always grip the plug firmly and pull straight out from the receptacle.

Do not use an extension cord with this appliance. If the power cord is too short, have a qualified electrician or service technician install an outlet near the appliance. Use of an extension cord can negatively affect the performance of the unit.

If any problems with the appliance persist, please contact our Customer Service Dept. to consult with a representative at **888 775-0202** or visit our website to request warranty service at **www.mcappliance.com.**

OPERATING YOUR REFRIGERATOR

Temperature Control

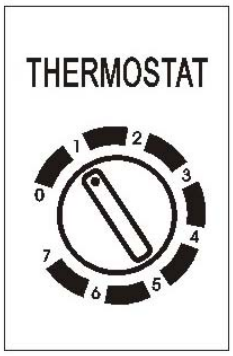

- Your refrigerator has one control for regulating the temperature. The temperature control is located on the upper right hand corner of the interior compartment.
- The first time you turn the unit on, adjust the temperature control knob to “7” and run for at least 2 hours before putting foods inside. This will ensure the cabinet is thoroughly chilled before food is put in.
- The range of the refrigerator temperature control is from position "1" the warmest to "7" the coldest. Adjust the temperature control to the setting that best suits your needs. The setting of “4” should be appropriate for home or office refrigerator use.

- **NOTE;**
  - If the unit is unplugged, loses power; you must wait 3 to 5 minutes before restarting the unit. If you attempt to restart before this time delay, the refrigerator will not start.
  - Large amounts of food will lower the cooling efficiency of the appliance.
  - Do not place the foods on the air outlet, and leave spaces for airflow.
  - If you choose to change the thermostat setting, adjust thermostat control by one increment at a time. Allow several hours for temperature to stabilize between adjustments.

Ice Tray

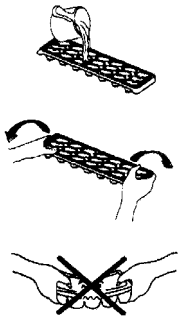

- Recommended temperature control setting for ice making is “7”.
- Fill the ice cube tray (2/3 capacity) with cold water and place the tray on the bottom of the chiller compartment to freeze properly.
- To eject the ice cubes from the tray, place over the ice bucket and twist slightly.
- Re-set the temperature control to setting “4”.

The Chiller Compartment

- This compartment is designed for the ice making and short-term storage of some commercially frozen foods.
- The temperature of the chiller compartment may not reach temperature low enough to store frozen foods safely and works well when the food is already frozen prior to storage.
- Place frozen food into the freezer as quickly as possible after purchase. If there are instructions on the packet, carefully follow these instructions regarding storage times.

How To Defrost

Defrost the freezer compartment when the ice / frost is approximately ¼” thick. Set the thermostat dial to “0” to defrost. Remove all contents from the freezer compartment. Leave the freezer door open to allow accumulated ice / frost to melt. Remove large pieces of ice as needed. Do not use hot water or other electric heating devices to melt the accumulated ice. After defrosting, remove accumulated ice / water and wipe the freezer compartment dry with a soft cloth. Restart the unit per starting instructions.

How To Change the interior light

NOTE:All parts removed must be saved to do the reinstallation of the light bulb. Before removing the light bulb, unplug the appliance from the power supply. Failure to do so could result in electrical shock or personal injury.

1. Remove the drip tray under chiller compartment
2. Remove the thermostat control box by unscrewing
3. Unscrew old bulb from the lower hole at the thermostat control box
4. Replace the new bulb of the same voltage and screw size.
5. Re-install the thermostat control box by screwing
6. Re-install the drip tray

CARE AND MAINTENANCE

Cleaning Your Refrigerator

- Upon installation of your new appliance, it is recommended that it be cleaned thoroughly.
- Turn the temperature control knob to “0” and then unplug the unit from the wall outlet.
- Remove all food content.
- Wash the inside with a damp warm cloth soaked in lukewarm water and baking soda solution. The solution should be about 2 tablespoons of baking soda to a quart of water.
- Be sure to keep the door gasket (seal) clean to keep the unit running efficiently.
- The outside of the refrigerator should be cleaned with mild detergent and warm water.
- Dry the interior and exterior with a soft cloth.

Vacation Time

- Turn the temperature control knob to “0” and then unplug the unit from the wall outlet.
- Remove all the food.
- Clean the refrigerator.
- Leave the door open slightly to avoid possible formation of condensation, mold, or odor.
- Use extreme caution in the case of children. The unit should not be accessible to child’s play.
- **Short vacations:** Leave the refrigerator operating during vacations of less than three weeks.
- **Long vacations:** If the appliance will not be used for several months, remove all food and unplug the power cord. Clean and dry the interior thoroughly. To prevent odor and mold growth, leave the door open slightly: blocking it open if necessary or have the door removed.

Moving Your Refrigerator

- Turn the temperature control knob to “0” and then unplug the unit from the wall outlet.
- Remove all the food.
- Securely tape down all loose items inside your refrigerator.
- Tape the doors shut.
- Be sure the refrigerator stays in the upright position during transportation.

Energy Saving Tips

- The refrigerator should be located in the coolest area of the room, away from heat producing appliances or heating ducts, and out of the direct sunlight.
- Let hot foods cool to room temperature before placing in the refrigerator. Overloading the refrigerator forces the compressor to run longer. Foods that freeze too slowly may lose quality, or spoil.
- Be sure to wrap foods properly, and wipe containers dry before placing them in the refrigerator. This cuts down on frost build-up inside the refrigerator.
- Organize and label food to reduce door openings and extended searches. Remove as many items as needed at one time, and close the door as soon as possible.

TROUBLESHOOTING GUIDE

You can solve many common refrigerator problems easily, saving you the cost of a possible service call. Try the suggestions below to see if you can solve the problem before calling for service.

PROBLEM	POSSIBLE CAUSE
Refrigerator does not operate.	Not plugged in. The circuit breaker tripped or a blown fuse.
Compressor turns on and off frequently.	The room temperature is hotter than normal. A large amount of food has been added to the refrigerator. The door is opened too often. The door is not closed completely. The temperature control is not set correctly. The door gasket does not seal properly. The refrigerator does not have the correct clearances. The refrigerator has recently been disconnected for a period of time. 4 hours are required for the refrigerator to cool down completely.
Temperature inside the refrigerator is too warm.	Temperature control is set too warm. Turn the control to a cooler setting and allow several hours for the temperature to stabilize. Door is kept open too long or is opened too frequently. Warm air enters the refrigerator every time the door is opened. Open the door less often. The door is not closed completely. The door gasket does not seal properly. A large amount of warm or hot food might have been stored recently. Wait until the refrigerator has had a chance to reach its selected temperature. The refrigerator has recently been disconnected for a period of time. 4 hours are required for the refrigerator to cool down completely.
Temperature inside the refrigerator is too cold.	Temperature control is set too cold. Turn the control to a warmer setting and allow several hours for the temperature to stabilize.
Temperature of external refrigerator surface is warm.	The exterior refrigerator walls can be as much as 30°F warmer than room temperature. This is normal while the compressor works to transfer heat from inside the refrigerator cabinet.
Popping or cracking sound when compressor comes on.	Metal parts undergo expansion and contraction, as in hot water pipes. This is normal. Sound will level off or disappear as refrigerator continues to run.
Bubbling or gurgling sound, like water boiling.	Refrigerant (used to cool refrigerator) is circulating throughout the system. This is normal.
Vibrations.	Check to assure that the refrigerator is on a level surface. Floor is uneven or weak. Refrigerator rocks on the floor when it is moved slightly. Be sure floor can adequately support refrigerator. Level the refrigerator by putting wood or metal shims under

	part of the refrigerator. The refrigerator is touching the wall. Re-level the refrigerator and move it from the wall. See “Installation Instructions”.
Moisture forms on inside refrigerator walls.	Weather is hot and humid, which increases internal rate of frost build-up. This is normal. Door is slightly open. Door is kept open too long, or is opened too frequently. Open the door less often. The door is not sealed properly.
Moisture forms on outside of refrigerator.	Door is slightly open, causing cold air from inside the refrigerator to meet warm moist air from outside.
The door will not close properly.	The refrigerator is not on a level surface. The gasket is dirty.

Refrigerator Warranty

Unless otherwise prohibited, **MC Appliance Corporation** warrants each new refrigerator to be free from defects in material and workmanship and agrees to remedy any such defect or to furnish a new part(s) (at the company's option) for any part(s) of the unit that has failed during the warranty period. Parts and labor expenses are covered on this unit for a period of one year after the date of purchase. In addition, **MC Appliance Corporation** warrants the compressor (parts only) to be free from defects in material and workmanship for a period of 5 years. The consumer is responsible for all labor and transportation expenses related to the diagnosis and replacement of the compressor after the initial one-year warranty expires. **A copy of the dated sales receipt / invoice is required to receive warranty service or a refund.**

This warranty covers appliances in use within the continental United States, Puerto Rico, Hawaii and Canada. The warranty does not cover the following:

- Damages due to shipping damage or improper installation.
- Damages due to misuse or abuse.
- Content losses due to failure of the unit.
- Inside components such as door panels, door shelves, racks, light bulbs, etc.
- Punctures to the evaporator system due to improper defrosting of the unit.
- Repairs performed by unauthorized service agents.
- Service calls that do not involve defects in material and workmanship such as instruction on proper use of the product, door reversal or improper installation.
- Replacement or resetting of house fuses or circuit breakers.
- Failure of this product if used for other than for its intended purpose.
- Disposal costs for any failed unit not returned to our factory.
- Any delivery costs incurred as the result of a unit that fails to perform as specified.
- Expenses for travel and transportation for product service if your appliance is located in a remote area where service by an authorized service technician is not available.
- The removal and reinstallation of your appliance if it is installed in an inaccessible location or is not installed in accordance with published installation instructions.
- Liability under this warranty is limited to repair, replacement or refund. If a replacement unit is not available or the unit cannot be repaired, liability is limited to the actual purchase price paid by the consumer.
- This warranty is non-transferable.
- This warranty applies only to the original purchaser and does not extend to any subsequent owner(s).

This warranty is in lieu of all warranties expressed or implied and no representative or person is authorized to assume for us any other liability in connection with the sale of this product. Under no circumstances is the consumer permitted to return this unit to the factory without prior written consent from MC Appliance Corporation.

Model	Parts	Labor	Compressor (Part Only)	Type of Service
HMBR350WE	One-Year	One-Year	Five Years	Carry-In
HMBR350BE	One-Year	One-Year	Five Years	Carry-In
HMBR350SE	One-Year	One-Year	Five Years	Carry-In

For Service or Assistance please call **888 775-0202**. Or visit us on the web at **www.mcappliance.com** to request warranty service.