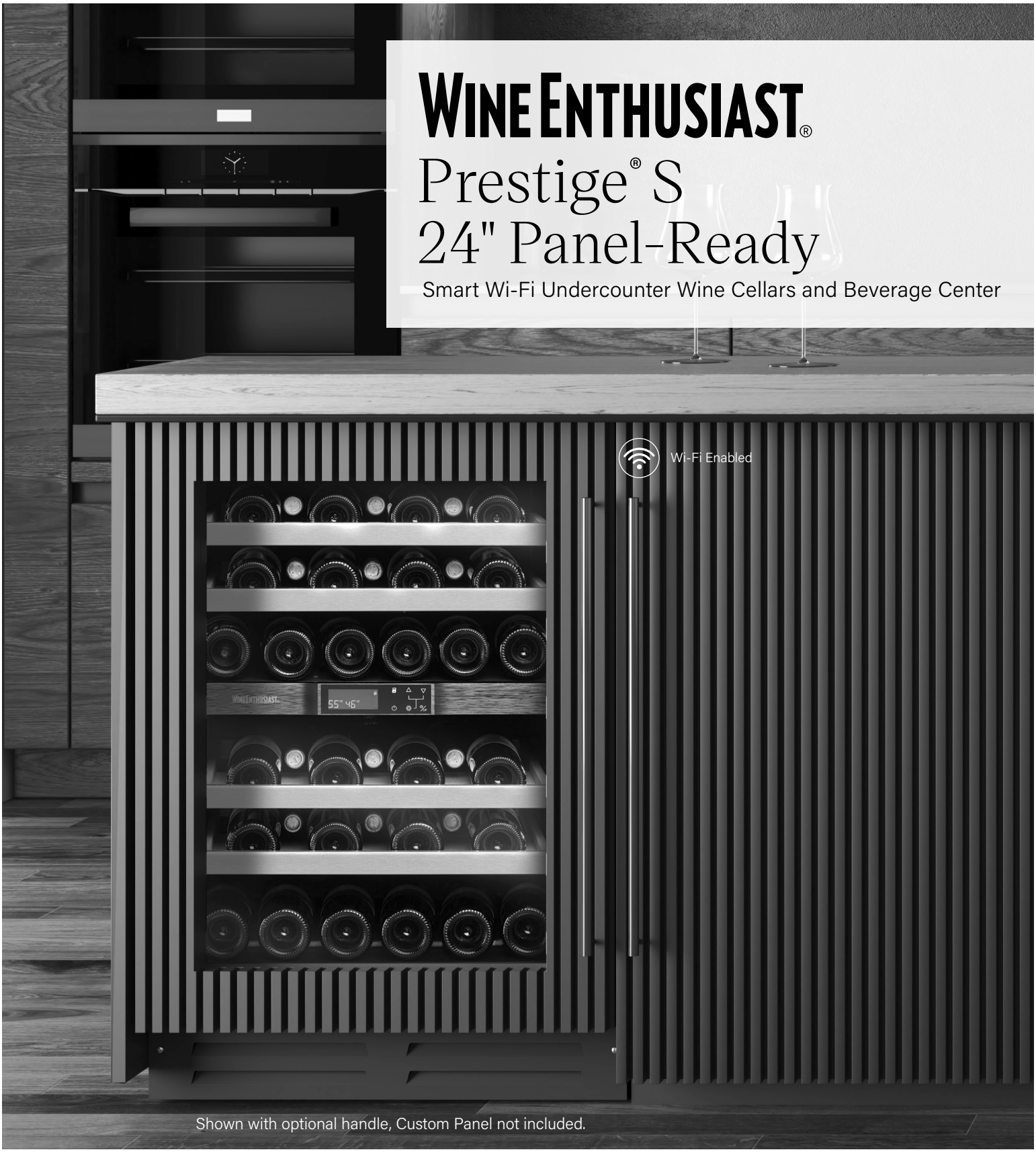

Use and Care Manual

FEATURES AND SIZES MAY VARY. PLEASE READ THIS MANUAL CAREFULLY BEFORE INSTALLING AND OPERATING.

SAVE THESE INSTRUCTIONS.

A Message from Wine Enthusiast:

Thank you for purchasing your wine cellar from Wine Enthusiast. We have been dedicated to developing and offering the best selection of wine products for more than 40 years. Our devoted team of wine experts apply their knowledge and passion to develop high-quality, innovative cellars to protect and showcase wines for every wine drinker. Thoughtfully designed for style, function and performance, your wine cellar will be a welcome part of your home you'll enjoy for years.

We appreciate you choosing Wine Enthusiast for your wine storage needs and look forward to delivering the best products and service to you.

Welcome to the Wine Enthusiast!

Keep for Your Records

Staple your receipt to your manual. **You will need the receipt to obtain warranty service.**

_____

Model Number

_____

Serial Number

_____

Date of Purchase

QUESTIONS?

For toll-free telephone support in the U.S. and Canada, call **800.648.6058**

For online support and internet product information: **WineEnthusiast.com**

This easy-to-use manual will guide you in getting the best use of your wine cellar. Please remember to record the model and serial number. They are located inside the cabinet on a label on the bottom right side. The following model numbers are referenced in this Use and Care Manual.

Beverage Centers:	Single Zone Models:	Dual Zone Models:
261 01 58 03	261 01 54 03	261 01 51 03
261 01 58 04	261 01 54 04	261 01 51 04

Table of Contents

Important Safeguards 3

Safety Precautions 4

Wine Cellar Features and Use 5

- Initial Setup 5
- Temperature Adjustment 5
- Shelving 6
- Removing the Rolling Shelf 6
- Replacing the Rolling Shelf 6
- Charcoal Filter 7
- Humidity Cassette (Included in Wine Cellars Only) 7
- Installation of the Front Grill 7

Installing as a Built-In Cellar 8

Reversing the Door Swing 9

Instructions for Installing a Custom Panel 11

Frame Preparation and Installation 13

Operating Your Wine Cellar 16

- Before You Start 17
- Setting the Temperature Control 17
- Unlock the Control Panel 17
- Interior Light 17
- Adjusting the Lighting 18
- Normal Operating Sounds You May Hear 18
- Wi-Fi Pairing 18

Installing the App 19

How to Connect Your Wine Cellars 20

Technical Data 22

Proper Wine Cellar Care, Cleaning and Maintenance 23

Troubleshooting Guide 24

Limited Warranty 25

Your Cheat Sheet to Wine Serving Temperatures 26

Important Safeguards

When using this appliance, always exercise basic safety precautions, including the following:

1. **Read all of the instructions before using this appliance.**
2. This appliance is not intended for use by persons (including children) with reduced physical, sensory or mental capabilities, or lack of experience and knowledge, unless they have been given supervision or instruction concerning use of the appliance by a person responsible for their safety.
3. Children should be supervised to ensure that they do not play with the appliance.
4. Use this appliance only for its intended purpose as described in this use and care guide.
5. This wine cellar must be properly installed in accordance with the installation instructions before it is used. See grounding instructions in the installation section.
6. Never unplug your wine cellar by pulling on the power cord. Always grasp the plug firmly and pull straight out from the outlet.
7. Unplug your wine cellar before cleaning or before making any repairs. **Note:** If for any reason this product requires service, we strongly recommend that a certified technician performs the service.
8. The SUPPLY CORD cannot be replaced. If the cord is damaged the appliance should be scrapped.
9. This appliance is designed for freestanding installation or can be recessed into cabinetry.
10. **DANGER: Risk of Child Entrapment!** Before you throw away your old wine cellar, take off the doors. Leave the shelves in place so that children may not easily climb inside.
11. Do not operate your wine cellar in the presence of explosive fumes.
12. Do not store foods in wine cellar as interior temperature may not be cool enough to prevent spoilage or may cause bacteria growth.



DANGER

Risk of child entrapment! Before you throw away your old wine cellar, take off the doors. Leave the shelves in place so that children may not easily climb inside.

Safety Precautions

Electrical Requirement

- Make sure there is a suitable power outlet with proper grounding to power the wine cellar.
- Avoid the use of three plug adapters or cutting off the third grounding in order to accommodate a two plug outlet. This is a dangerous practice since it provides no effective grounding for the wine cellar and may result in shock hazard.

Install Limitations

- Do not install your wine cellar in any location not properly insulated or heated e.g. garage etc. Your wine cellar was not designed to operate in temperature settings below 50° Fahrenheit.
- Select a suitable location for the wine cellar on a hard even surface away from direct sunlight or heat source e.g. radiators, baseboard heaters, cooking appliances etc. Any floor unevenness should be corrected with the leveling legs located on the front and rear bottom corners of the wine cellar.
- This appliance is designed for freestanding installation or can be recessed into cabinetry.

Use of Extension Cords

- Avoid the use of an extension cord because of potential safety hazards under certain conditions. If it is necessary to use an extension cord, use only a 3-wire extension cord that has a 3-blade grounding plug and a 3-slot outlet that will accept the plug. The marked rating of the extension cord must be equal to or greater than the electrical rating of the appliance.



WARNING!

Keep packaging materials away from children. Polythene sheets and bags can cause suffocation!

If possible, please recycle packaging material at a recycling facility.

CAUTION!

To avoid risk of personal injury or property damage when setting up, have two people unpack and move this appliance into place.

WARNING!

The refrigerant R600a contained within the appliance is environmentally friendly, but flammable. Leaking refrigerant can ignite.

Wine Cellar Features and Use

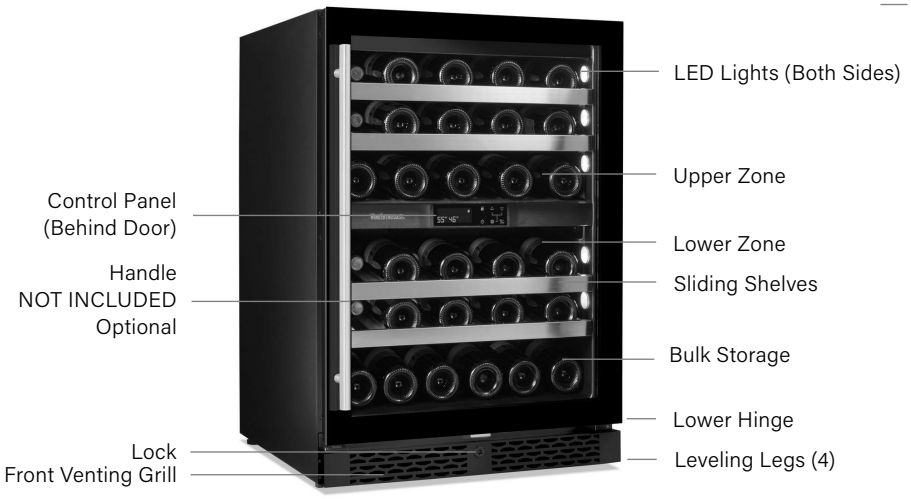

PANEL-READY DUAL ZONE



PANEL-READY SINGLE ZONE



PANEL-READY BEVERAGE CENTER

Initial Setup

- **Before connecting the wine cellar to the power source, let it stand upright for approximately 24 hours. This will reduce the possibility of a malfunction in the cooling system from handling during transportation.**
- Once you have plugged the unit into an electrical outlet, let the unit run for at least 30 minutes to acclimate before making any adjustments.

Temperature Adjustment

- The wine cellar can be set to accommodate your wine storage requirements. To set the temperature, press the up or down arrow button to increase or decrease the temperature setting until the desired temperature is attained. It may take some time to reach the set temperature.
- The temperature will fluctuate more so when the wine cellar is empty.

Shelving

(Type and number of shelves will vary per model)

Your cabinet was designed to store a maximum number of bottles securely. We recommend that you observe the tips below to optimize loading:

- Remove all packing materials from shelves once unit is stable and ready for bottle storage.
- Disperse the bottles evenly to avoid concentrating weight in one place. Bottles must not touch either the back of the cabinet or the step at the bottom. While your wine cellar was designed to hold large format bottles, such as Pinot Noir, larger bottles could reduce the number of bottles you can fit on a shelf.
- Make sure that the bottles are not all grouped together either at the top or bottom of the cabinet.
- Only pull out one shelf at a time, never attempt to pull out more than one.
- **Maximum weight capacity per shelf is 55 lbs.**

Removing the Rolling Shelf

1. Remove all bottles.
2. Pull the shelf out as far as it will go.
3. Push the left side lever (2) downward while pushing the right side lever (2) upwards (as illustrated below).
4. Pull the shelf towards you to completely release from wine cellar.

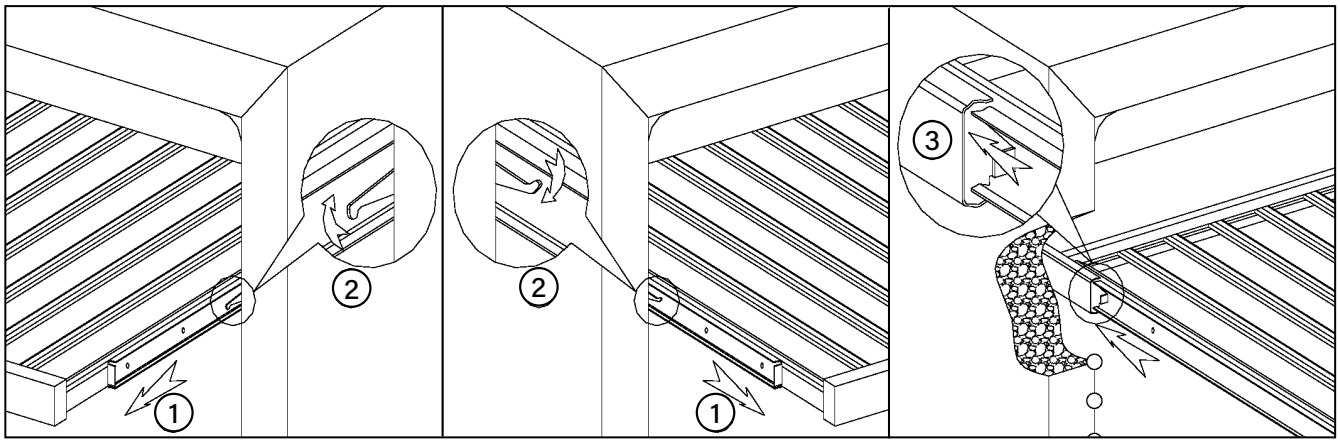

Replacing the Rolling Shelf

1. Align the shelf guides (1) with the guide rails (3) (as illustrated above).
2. Gently slide the drawer into the wine cellar.

Charcoal Filter

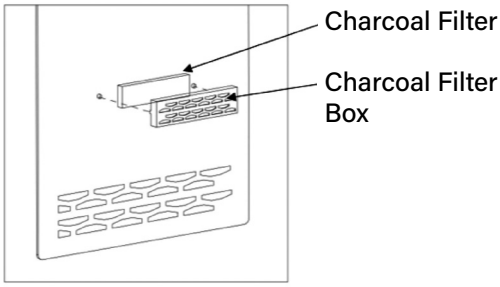

Your wine cellar comes with a charcoal filter that helps to eliminate orders. It should be replaced every 6 to 12 months for optimal protection. To replace the filter:

1. Find the location of the charcoal filter on the back wall (air-duct plate).
2. Remove the shelf in front of the filter if necessary.
3. Remove the charcoal filter box from the two mounting holes on the air-duct plate by hand pulling directly outward, remove the old charcoal filter, and place the new one into the mounting box.
4. Snap the charcoal filter box into the mounting hole on the air-duct plate.
5. Re-Install the shelf.

Charcoal Filter and Filter Box Model. Reorder at WineEnthusiast.com
#261 99 44 – single filter and box ▪ #261 99 88 – 2-Pack (2 each - filter and box)

Humidity Cassette (Included in Wine Cellars Only)

The ideal humidity level for wine storage is 50% to 70%, this range will help to prevent the corks from drying out, if the humidity is too low, and help prevent mold from developing, if the humidity is too high.

- Be sure the wine cellar is at least 50% filled with bottles spaced throughout the wine cellar, not grouped together.
- To use the included humidity cassette, remove the lava stones from the bag and soak them in water for a few hours. Lava stones are excellent material at absorbing moisture and then slowly releasing it back into your wine cellar.
- Place the humidity cassette on the bottom of the wine cabinet, close the door for at least 24 hours. Please do not open the door during this time to allow the temperature and humidity to stabilize.
- After 24 hours, monitor the humidity level on the control panel or use the Wine Enthusiast App. If the humidity exceeds 70% for more than 48 hours, remove the cassette and wipe away any excess water.
- Conversely, if the humidity is too low, soak the lava stones in water and place inside the cabinet for 24 hours, again without opening the doors so the temperature and humidity can stabilize.
- The humidity and temperature levels will stabilize more so over time (weeks) and when the wine cellar is filled with bottles.
- To properly maintain the lava stones, rinse them under cold water every 3 or 4 months. The cassette should be examined every year and replaced after 3 years of usage.

Installation of the Front Grill

The wine cellar is shipped without the bottom grill installed to avoid damage during transit. The grill is attached to one of the shelves inside the unit. To install the grill, use the 12 provided screws and attach it to the bottom of the cabinet. Two screws go on each side of the grill as shown below.

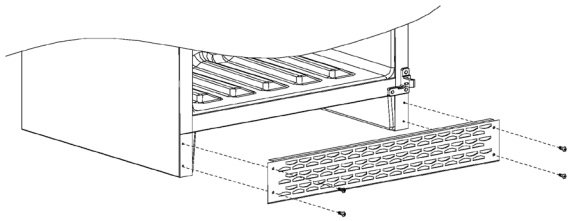

Installation as a Built-In Cellar

These cut out dimensions show the minimum space required for your wine cellar to perform as designed,

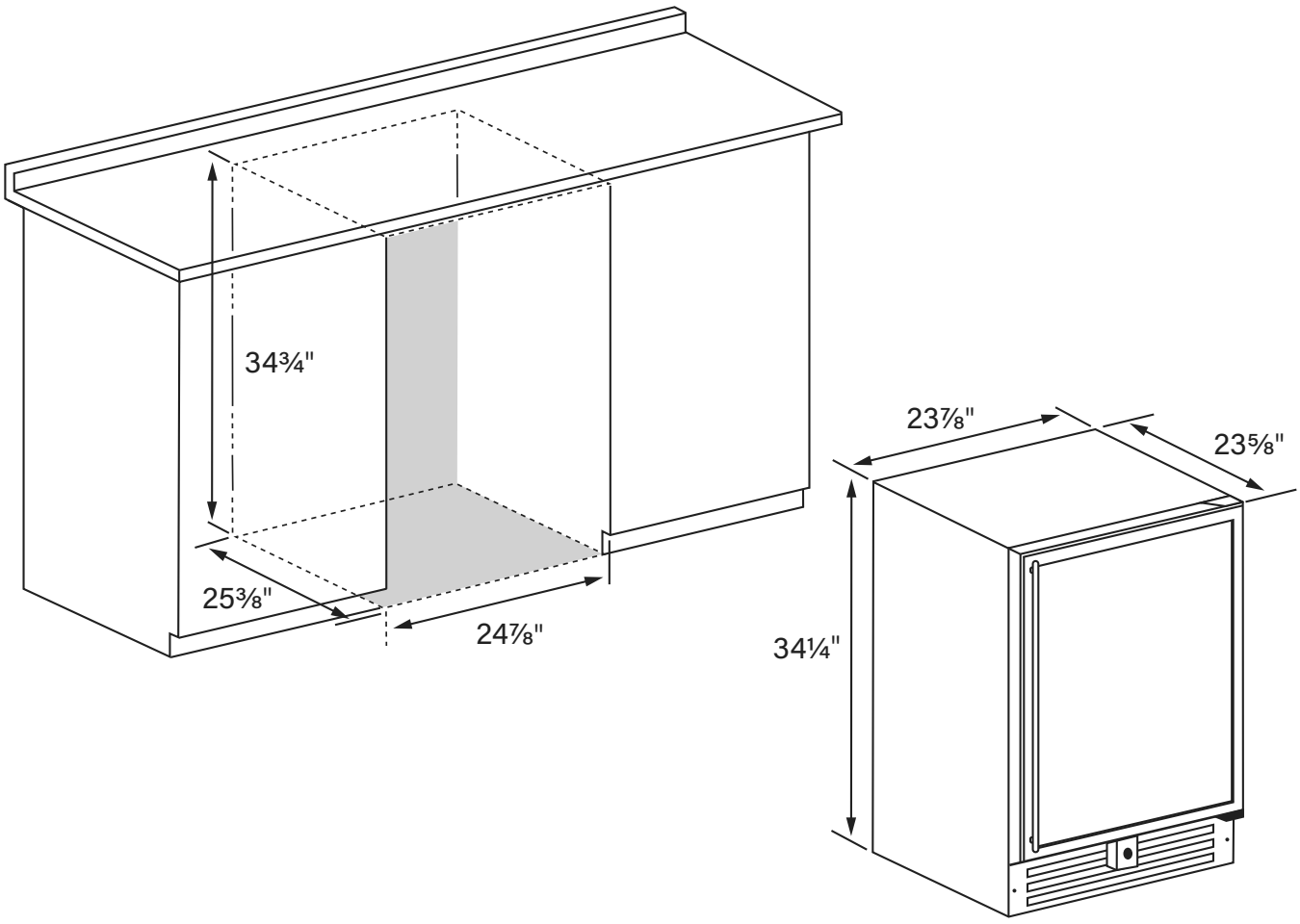

PRESTIGE S 24" PANEL-READY SMART WI-FI UNDERCOUNTER WINE CELLARS AND BEVERAGE CENTER		
MODEL	**CELLAR DIMENSIONS**	**DIMENSIONS OF BUILT-IN AREA**
SINGLE UNIT	34¼"H x 23⅞"W x 23⅝"D*	34¾"H x 24⅞"W x 25⅜"D
DOUBLE UNIT**	34¼"H x 47¾"W x 23⅝"D*	34¾"H x 48¾"W x 25⅜"D

** Handle adds 2" to depth.*

*** PLEASE NOTE, this wine cellar is actually multiple single units, side by side, with opposite hinged doors. Each unit will have its own power cord and every two units combined electric power requires a dedicated 20 amp outlet.*

Reversing the Door Swing

Before you begin: Tape down shelves to avoid movement during the process.

The door of this appliance can be hung to open on the left or right side. To reverse the door swing of your cooler and open from the opposite side, please follow the instructions and diagrams below.

Warning: To avoid accidents during the process of changing the door, we recommend that you get assistance. The glass door is heavy and may cause injury if dropped.

1. Put the cabinet in an open operating area, have the door opened to the maximum angle.
2. Remove the 6 decorative hole plugs from the top and bottom of the wine cellar. Save them for later use.

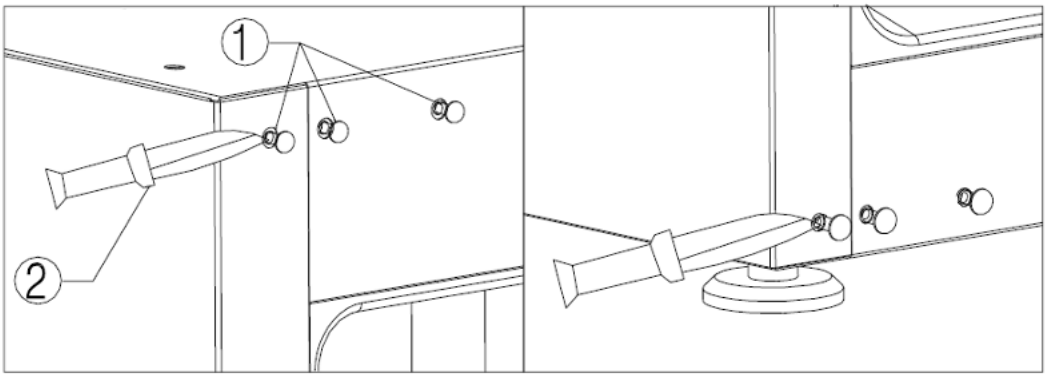

3. Use the Phillips screwdriver to remove the countersunk screws on the upper and lower door hinges.

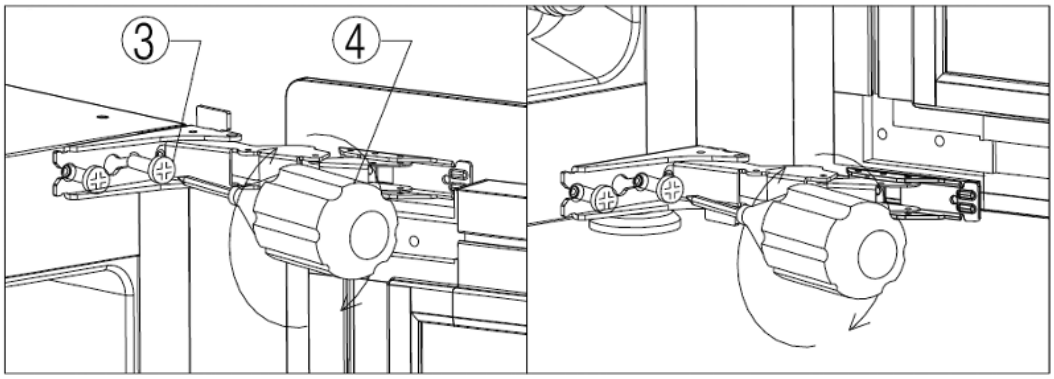

Reversing the Door Swing

(continued)

4. Rotate the door by 180 degrees, and then use screwdriver to re-install the door to the opposite side of the wine cellar. (The door hinges are attached to the glass door).

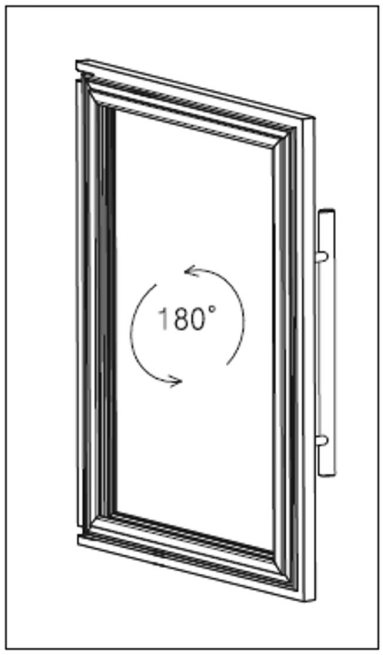

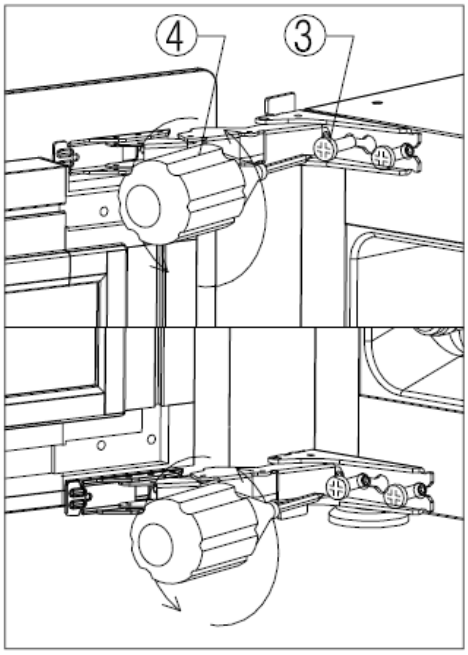

5. Re-insert the 6 decorative hole plugs on the opposite side. Check the door swing to ensure the door seals properly, adjust the hinges if necessary.

Instructions for Installing a Custom Panel

Your Wine Enthusiast Prestige L 22.5" Panel-Ready Counter-Depth Wine Cellar is designed to accept a customer supplied custom wood panel.

Parts Included:


WG09-0044-110 Philips Head Screws M5*12 *4


WG09-0021-113 "Clutch Head▪ Self-Tapping Screws ST4*12 ▪11


IG09-0009 "Clutch Head▪ Self-Tapping Screws ST4*35 ▪6


DZ02-1003 Screws cover ▪4

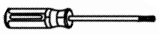
Philips screwdriver


6mm Drill Bit


Electric drill

Anchor Bracket x 2

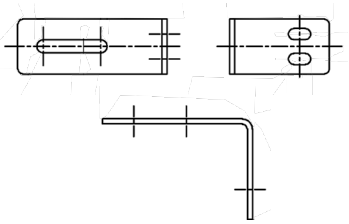

Anchoring the Wine Cellar to Cabinetry

It is recommended the Wine Cellar be anchored into the cabinetry when being built in.

To secure the non-hinge side of the wine cellar

1. Remove the 2 upper plastic hole plugs and the 2 lower plastic hole plugs.

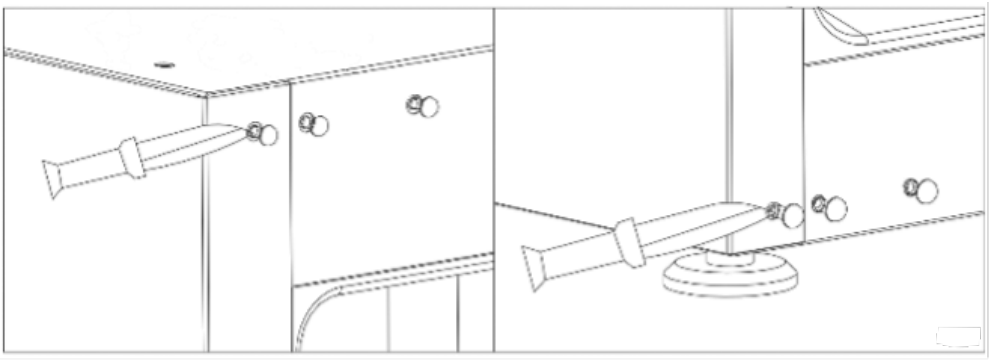

Instructions for Installing a Custom Panel

(continued)

2. Attach the anchor brackets to the wine cellar using 4 (four)M5 x 12 Phillips flat head screws with the screw covers. The bend in the brackets should be facing outward, parallel to the closed door.

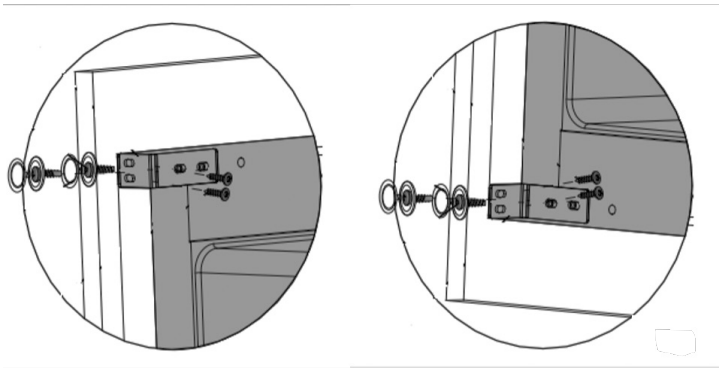

3. Properly level and position the wine cellar.
4. Use a Clutch Driver (not included) and 4 (four) ST4 X 12 self-tapping screws, through the anchor brackets, to secure the wine cellar to the cabinetry.

To secure the hinge side of the wine cellar

1. Locate the 2 screw holes in the upper Hettich hinge and the 2 screw holes in the lower hinge.
2. Using 4 (four) ST4 X 12 self-tapping screws to secure the wine cellar to the cabinetry.

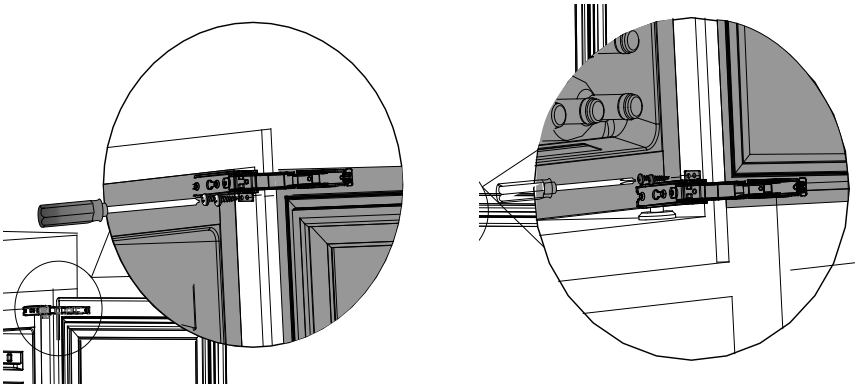

Frame Preparation and Installation

- For a Right Hinge opening appliance, cut the panel to the dimensions recommended in the diagram below.
- Recommended panel thickness is ¾" (20 to 22mm)
- Maximum weight for your custom panel is 50 pounds.
- Panel dimensions shown below are in millimeters for accuracy and are sized to cover the appliance door. It can be made wider and/or taller to match surrounding cabinetry, you will need to make modifications to these instructions.
- Depending on the density of the wood, you might want to consider using pilot holes. If you use pilot holes, BE SURE NOT TO DRILL ALL THE WAY THROUGH YOUR CUSTOM WOOD PANEL!

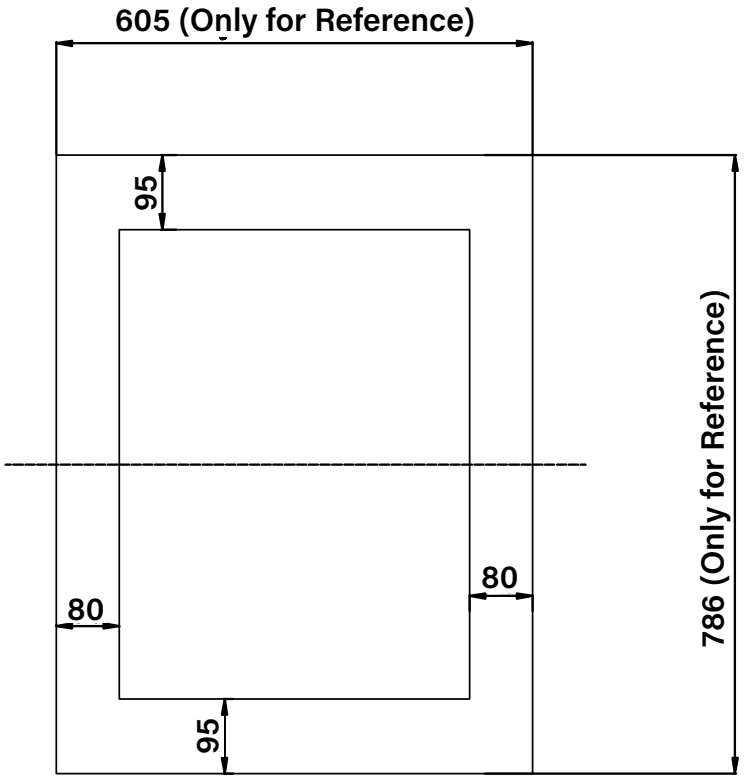

Frame Preparation and Installation

(continued)

1. Locate the 4 holes. 2 on each side as shown below. Use the 4 (six) 5 * 35 self-tapping screws, tighten the door to the custom panel.

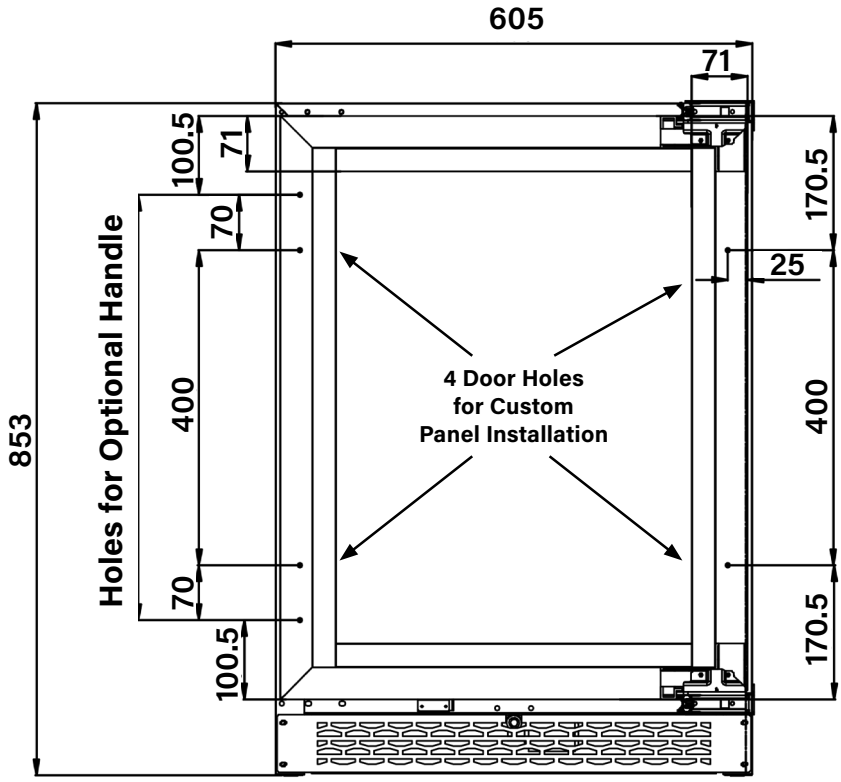

Frame Preparation and Installation

(continued)

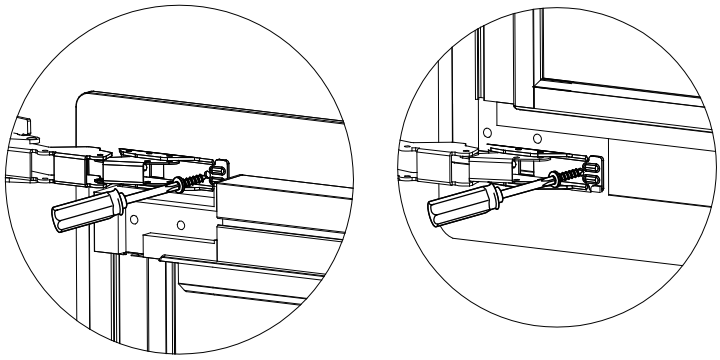

2. Secure the custom panel to the hinges. Use 2 (two) 4 * 12 self-tapping screws through the upper door hinge and 2 (two) 4 * 12 self-tapping screws in the lower door hinges into the custom panel.

3. Attach your door handle (not supplied) using countersunk screws. Be sure to confirm the proper holes in the door panel to match the holes in your handle. Depending on your handle dimensions you might need to drill new holes through the door frame.

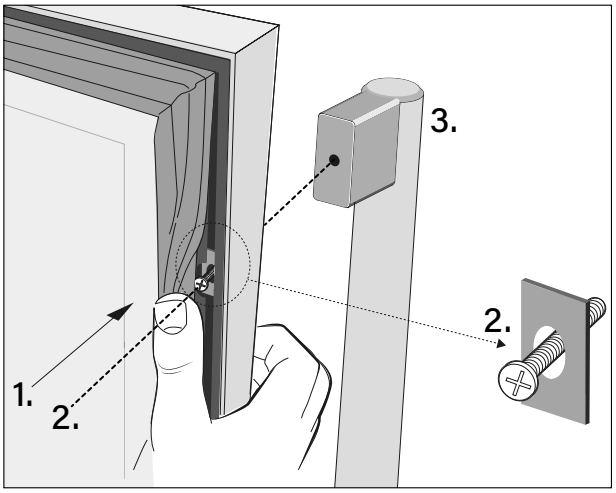

4. If you want to use our Prestige Square Stainless-Steel Handle, order part # 261 02 98 02 from WineEnthusiast.com, you will then be able to use the 2 predrilled handle holes. You will need to drill through the custom panel to attach the handle. Depending on the thickness of your custom door panel you might need to purchase longer screws (i.e. 35mm)

5. Starting at the corners, insert the gasket into the channel in the inside door frame. This may take some force, ensure the gasket is fully seated.

Operating Your Wine Cellar

Each wine cellar includes an operating panel on the front of the unit. This operating panel includes several features to operate and control the temperature.

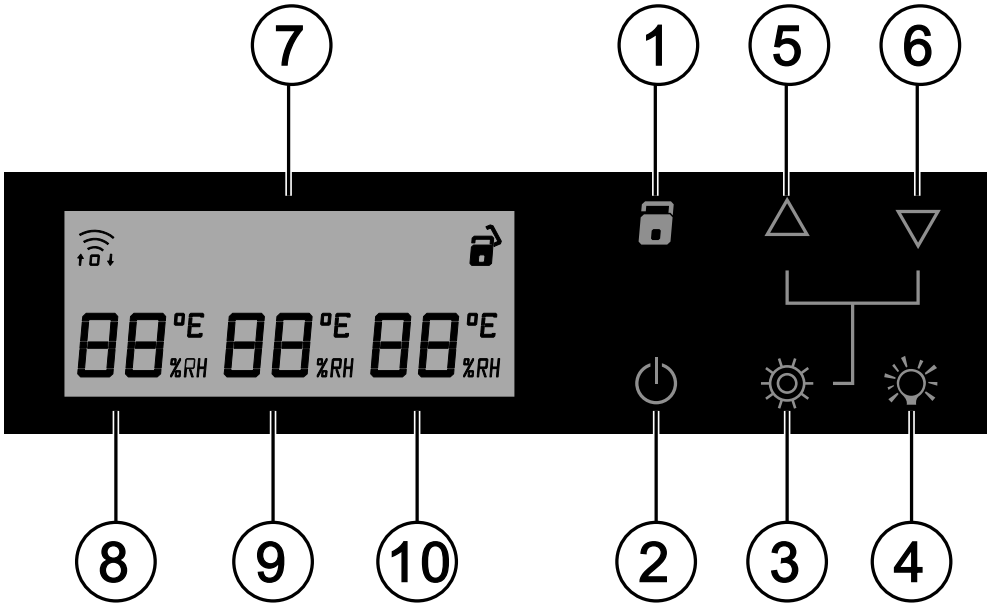

1. **Press and hold for 3 seconds** to unlock the display.
2. **Press and hold for 1 second** to turn the Power ON or 3 seconds for OFF.
3. Function button: Activates the temperature set function.
4. Light button: Turns the interior lights ON and OFF and changes the light color.
   Press and hold for 3 seconds to toggle the display between Fahrenheit and Celsius.
5. Increases set temperature.
6. Decreases set temperature.
7. Display window.
8. **Single Zone:** Displays the setting temperature

   Dual Zone: Displays the upper zone actual temperature
9. **Single Zone:** Displays the actual temperature

   Dual Zone: Displays the lower zone actual temperature
10. Humidity Display: Displays the relative humidity percent

    Humidity Readings for Dual Zone: Simultaneously press the UP (#5) and DOWN (#6) buttons, the LEFT (#8) display will show the Upper Zone humidity level and the RIGHT (#9) display will show the Lower Zone humidity level.

Before You Start

The wine cellar should be placed in a location where the ambient temperature is between 50-109° Fahrenheit. If the ambient temperature is above or below this range, the performance of the unit may be affected. For example, placing your unit in extreme cold or hot conditions may cause interior temperatures to fluctuate.

Setting the Temperature Control

1. Make sure power cord is connected to a properly grounded outlet.
2. Press and hold the POWER button for 1 second to turn the power ON.
3. Press and hold the LOCK button for 3 seconds to unlock the display.
4. Press the FUNCTION button to activate the temperature display.

   Dual Zone Only: the Upper Zone temperature display.
5. Set the desired temperature by pushing the UP or DOWN buttons.
6. Temperatures increase or decrease 1°F with each push of the UP or DOWN button.
7. Dual Zone Only: Press the FUNCTION button again to activate the Lower Zone temperature setting.

NOTE: Temperatures may fluctuate depending on whether the interior light is ON or OFF and depending on the position of the bottles.

Unlock the Control Panel

To UNLOCK the control panel:

Press and hold the LOCK button for 3 seconds to unlock the display.

Interior Light

To complement the look of your wine collection, LED lighting has been built into the wine cellar. Simply press and hold the “Light” button (#4) and the light comes on, press and hold again for off. For maximum energy efficiency, leave light off when not viewing your collection.

Adjusting the Lighting

- To adjust the light intensity, tap the LIGHT (#4) button once, the temperature display (#8) will begin flashing a lighting intensity percentage (0 - 25 - 50 - 75 - 99). Use the UP button (#5) and DOWN button (#6) to scroll through the light intensity levels to select your preference.
- To change the light color, tap on the LIGHT (#4) button again while the light intensity setting is still flashing. The lights will change color (Amber or White), tap again to change back.
- The lighting will automatically exit programming if left untouched for 5 seconds.

NOTE: The Wine Enthusiast Cellars Smart Remote App will allow you to program the light remotely. The intensity options, on the App, are 0 – 25 – 50 – 75 – 100 percent.

Normal Operating Sounds You May Hear

- Boiling water, gurgling sounds or slight vibrations that are the result of the refrigerant circulating through the cooling coils.
- The thermostat control will click when it cycles on and off.

Wi-Fi Pairing

- When connecting your Wine Enthusiast Prestige wine cellar to the Wine Enthusiast App you might need to activate the pairing mode to make a connection.

  Press and hold the FUNCTION button (#3) for 5 seconds, the Wi-Fi icon will begin flashing. Once paired the Wi-Fi icon will remain lit.

Installing the App

1.

Scan this QR Code to download the free Wine Enthusiast Cellars Smart Remote App.

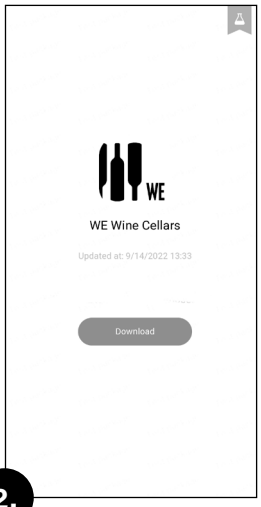

2.

Press 'Download.'

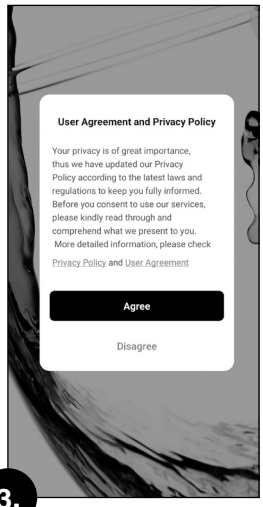

3.

Read and press 'Agree' to the User Agreement and Privacy Policy.

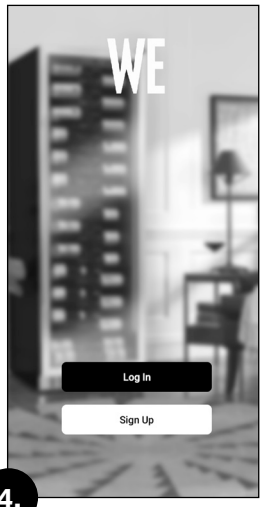

4.

Press 'Sign Up' to create an account.

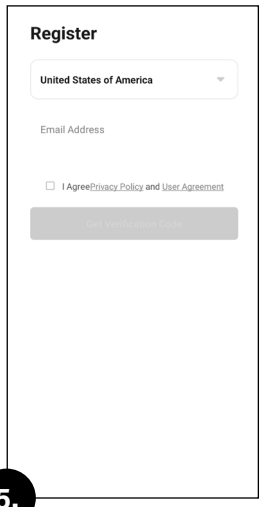

5.

Enter your email address, and check 'I Agree to the Privacy Policy and User Agreement.'

a. You can review each document by pressing on the highlighted text

b. Then press the 'Get Verification Code' button.

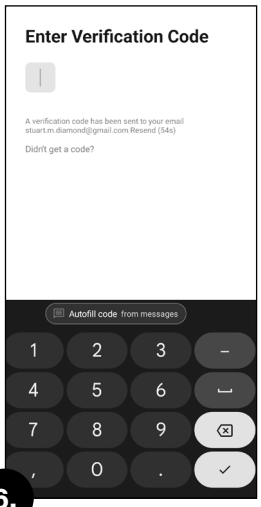

6.

Check your email for the verification code, enter the code.

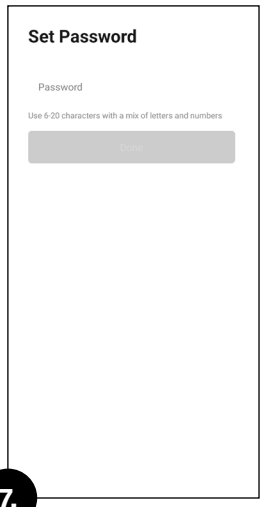

7.

Set your password. Use 6 to 20 characters with a mix of letters and numbers. Be sure to write this down and keep it in a secure place.



8.

Review the Data Analysis and Personalization permission, leave checked or unchecked, then press 'Go to App.'

How to Connect to Your Wine Cellars

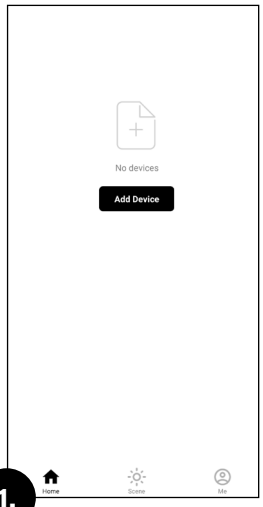

1.

Press the 'Add Device' icon on the screen to add a new wine cellar.

Ensure that Wi-Fi and Bluetooth are both ON.

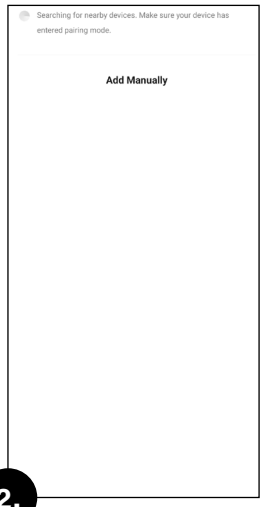

2.

The App will automatically search for an available wine cellar.

a. Be sure the App permissions is set to ALLOW Nearby Devices.

b. Your wine cellar is in pairing mode (Wi-Fi icon is flashing on the temperature display).

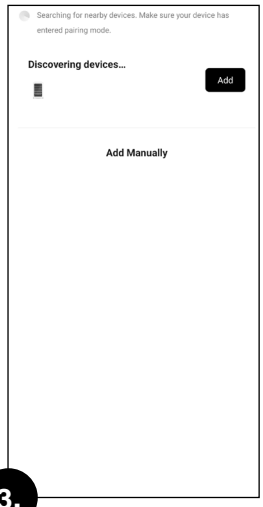

3.

The App should list Discovering Devices. Press 'Add' on the wine cellar you want to add.

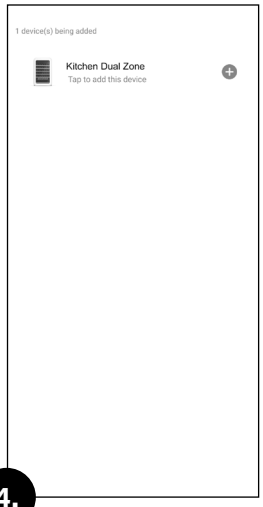

4.

The App will list the wine cellar (again).
Press the + icon next to the listed cellar.

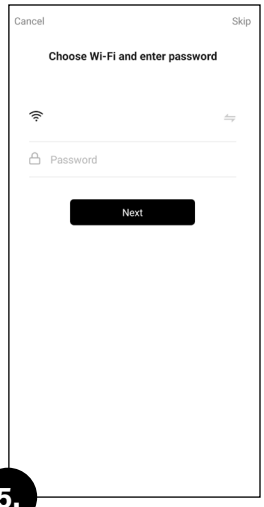

5.

Select your Wi-Fi from the list and then enter the password.

- The Wi-Fi module will connect with 2.4 or 5 GHz routers.
- Press 'Next.'

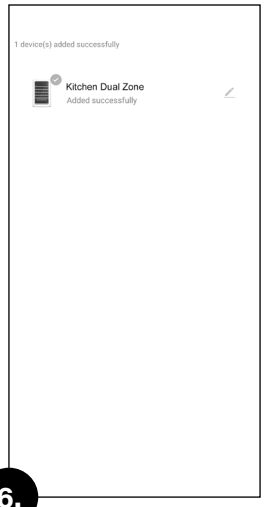

6.

Your wine cellar will now connect to the Wi-Fi router, this may take a few minutes, please be patient.

- Press the wine cellar icon to go to the control panel.

How to Connect to Your Wine Cellars

(continued)

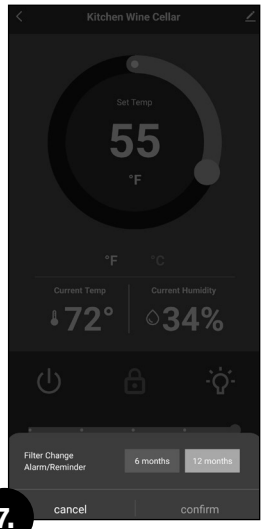

7.

FILTER CHANGE

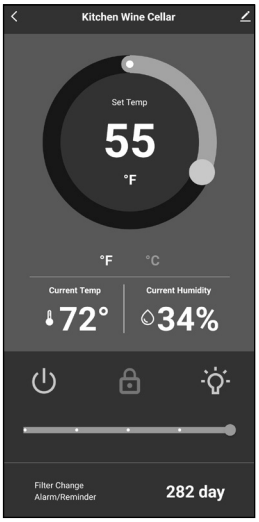

SINGLE ZONE

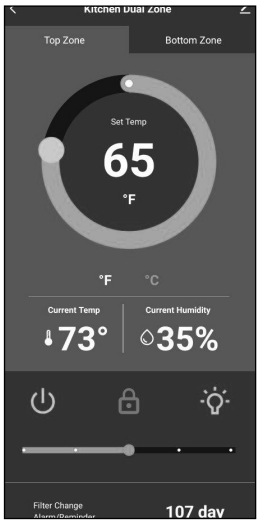

DUAL ZONE

You can view and adjust the temperature by sliding your finger over the wheel.

a. Change the temperature display from Fahrenheit to Celsius by pressing the F or C.

b. Lock/Unlock the temperature controls by pressing the LOCK icon.

c. Change the color of the LED lighting by repeatedly pressing the light icon, rotating between white and amber.

d. Change the intensity of the LED lighting by sliding the light adjustment bar left to right (0% - 25% - 50% - 75% - 100%).

e. Turn the Lights ON and OFF by pressing the LIGHT icon for 3 seconds.

f. To customize the display, press the pencil icon on the top right corner.

Please note: the Current Humidity is not adjustable.

Customizing Settings

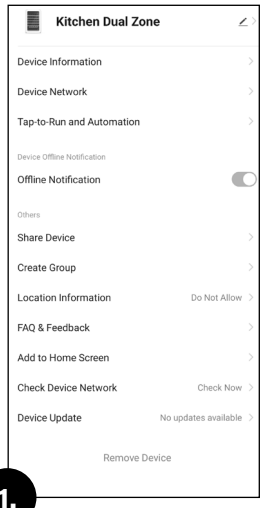

1.

Press the pencil icon on the top right corner of this screen.



2.

To change the name of the wine cellar press the arrow on the right of the name.

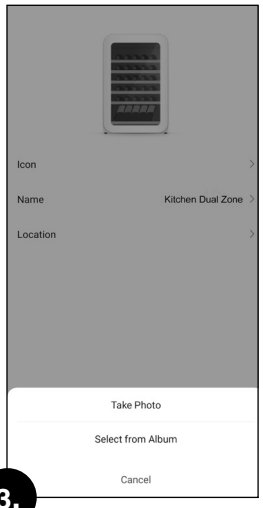

3.

To change the image, press the arrow to the right of the word ICON, you can upload a photo or use your camera to take a picture of the cellar you want to add.

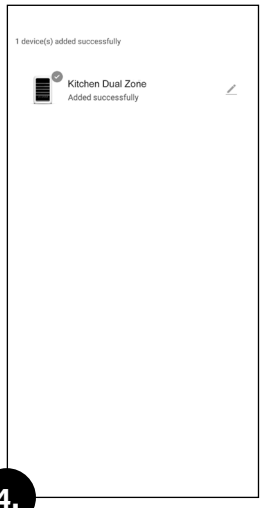

4.

You can control multiple units from this one App, press 'Home' to see a list of all connected units.

Technical Data

PRESTIGE S 24" PANEL-READY SMART WI-FI UNDERCOUNTER WINE CELLARS AND BEVERAGE CENTER	SINGLE ZONE (each unit)	DUAL ZONE (each unit)	BEVERAGE CENTER (each unit)
INSTALLATION TYPE	Freestanding or Built-In		
ELECTRICAL REQUIREMENTS	120V/60HZ		
PROTECTION CLASS	N / ST / T		
CLIMATE CLASS	I		
AMBIENT TEMPERATURE	50°F – 109°F		
TEMPERATURE CONTROL RANGE	41°F – 68°F	Both Zones: 41°F – 68°F	34˚F to 50˚F
TOTAL VOLUME	5.17 Cu. Ft.	4.87 Cu. Ft.	5.17 Cu. Ft.
RATED CURRENT	1.4 Amps		
START-UP AMPS	<5 Amps		
RUNNING AMPS	1.5 Amps		
REFRIGERANT	R600a – 1.23 oz.		
ENERGY CONSUMPTION	180 kWh/year	120 kWh/year	280 kWh/year
PLUG TYPE	Right Angle NEMA 5-15P Plug with SJT 3X18AWG Cord		
BREAKER SIZE	15 Amp Line*		
DECIBEL RATING	42 dB(A)		
APPROXIMATE NET WEIGHT	114 lbs.	108 lbs.	98 lbs.
DIMENSIONS	34¼"H x 23⅞"W x 23⅝"D**		

** Multiple Unit Note: If there is more than one cellar on a line, a 20 Amp circuit is required for every 2 units.*

*** Handle adds 2" to depth.*

US
273312

Proper Wine Cellar Care, Cleaning & Maintenance

General

- Prepare a cleaning solution of 3-4 tablespoons of baking soda mixed with 2 cups of warm water or use one part Borax for ten parts water (about one cup per gallon). Use sponge or soft cloth, dampened with the cleaning solution, to wipe down your wine cellar.
- Rinse with clean warm water and dry with a soft cloth.
- Do not use harsh chemicals, abrasives, ammonia, chlorine bleach, concentrated detergents, solvents or metal scouring pads. Some of these chemicals may dissolve, damage and/or discolor your wine cellar.



WARNING!

To avoid electric shock always unplug your cellar before cleaning. Ignoring this warning may result in death or injury.

CAUTION!

Before using cleaning products, always read and follow manufacturer's instructions and warnings to avoid personal injury or product damage.

Mold on the Interior

Microscopic mold spores are naturally occurring and present in the ambient air. When mold gets in your wine cellar it may grow within the humid environment. Removal can be completed with mild solutions of commonly available products such as Borax, vinegar, or baking soda.

Door Gaskets

- Clean door gaskets every three months according to general instructions. Gaskets must be kept clean and pliable to assure a proper seal.
- Petroleum jelly applied lightly on the hinge side of gaskets will keep the gasket pliable and assure a good seal.

Power Interruptions

Occasionally there may be power interruptions due to thunderstorms or other causes. Remove the power cord from AC outlet when a power outage occurs. When power has been restored, **wait 3 to 5 minutes** then re-plug the power cord to AC outlet.

Vacation and Moving Care

- For long vacations or absences, unplug the wine cellar and clean the wine cellar and door gaskets according to "General Cleaning" section. Leave doors open, so air can circulate inside.
- Always move the wine cellar vertically. Do not move with the unit lying down, as possible damage to the sealed system could occur.

Note: After moving, wait for 24 hours before plugging in the wine cellar.

Troubleshooting Guide

Many common issues with your wine cellar can be easily solved. Try the troubleshooting tips below if you experience any problems.

Wine Cellar Does Not Operate:

- Check if wine cellar is plugged in.
- Check if there is power in the AC outlet, by checking the circuit breaker.

Wine Appears Too Warm:

- Door may have been opened too frequently or for an extended period of time.
- Allow time for recently added wine to reach desired temperature.
- Check door gasket for proper seal.
- Clean condenser coils.
- Adjust temperature control to colder setting.

Wine Appears Too Cold:

- If temperature control setting is too cold, adjust to a warmer setting.

Wine Cellar Runs Too Frequently:

- This may be normal to maintain constant temperature during high temperature and humid days.
- Doors may have been opened frequently or for an extended period of time.
- Clean condenser coils.
- Check door gasket for proper seal.
- Check to see if doors are completely closed.

Moisture Build-Up on Interior or Exterior of the Wine Cellar:

- This is normal during high humidity periods.
- Prolonged or frequent door openings.
- Check door gasket for proper seal.

Wine Cellar Door Does not Shut Properly:

- Level the wine cellar.
- Check for blockages e.g. wine bottles, shelves.

Limited Warranty

This Warranty Covers Appliances within the Continental United States Only.

How to Get Warranty Service:
In the event your wine cellar is not operating within the manufacturer's specifications, during the Warranty Period, contact Customer Care at http://help.wineenthusiast.com or by phone 800.648.6058.

Length of Warranty:
This Limited Warranty lasts for one (1) year from date of receipt of purchase of the wine cellar ("Limited Warranty Period") and the sealed system (compressor, condenser, evaporator) will be covered for three (3) years. Extended warranties may be available for an additional cost at the time of purchase or up to 30 days from date of purchase. These extended warranties would extend this one (1) year limited warranty to two (2), three (3), or five (5) years. Details about our extended protection plans can be found at wineenthusiast.com.

Who is Protected:
This Limited Warranty protects the original purchaser during the Limited Warranty Period, provided that such purchaser can present appropriate proof of original purchase.

What is Covered:
This Limited Warranty covers any defects in workmanship or materials in your new wine cellar under normal use.

What is Not Covered:
The following are not covered by this Limited Warranty: damage due to such things as accident, misuse, abuse, mishandling, neglect, unauthorized repair, failure to properly maintain, acts of God or any other cause beyond the reasonable control of the Wine Enthusiast whether similar or dissimilar to the foregoing.

Commercial use or use other than normal household or small office.

Purchaser understands and acknowledges that the wine cellar is a wine refrigerator, which houses wine. Purchaser assumes all the risk of using these units, including risk of spoilage, humidity variations, temperature variations, leaks, fires, water damage, mold, mildew, dryness and similar perils that may occur.

What We Will Do:
During the Limited Warranty Period, Wine Enthusiast and/or the manufacturer will, at its sole discretion, repair or replace any wine cellar not operating within the manufacturer's specifications. All costs for labor and materials thereto shall be covered during the Limited Warranty Period. If Wine Enthusiast deems the wine cellar is not repairable, Wine Enthusiast will use the value of your original order toward a replacement; provided, however, that the purchaser will be responsible for all shipping and handling costs with respect to the replacement after the initial ninety (90) days after the date of receipt of original purchase. ***After the initial ninety (90) day period after the date of receipt of purchase, purchaser must pay any shipping and handling charges that are incurred in shipping or transporting the wine cellar for service under this Limited Warranty.*** Wine Enthusiast reserves the right to substitute materials of substantially similar quality in the event that identical materials are not available at the time the Limited Warranty services are performed. Wine Enthusiast reserves the right to request that purchaser contact a local refrigeration company to service the wine cellar.

How to Get Warranty Service:
In the event your wine cellar is not operating within the manufacturer's specifications, during the Warranty Period, contact Customer Care at http://help.wineenthusiast.com or by phone 800.648.6058.

Limitation of Implied Warranties:
All implied warranties, including warranties of merchantability and fitness for a particular purpose, are limited in duration to the length of this Limited Warranty.

Exclusion of Certain Damages:
Wine Enthusiast's liability is limited to replacement or repair of the defective wine cellar. Wine Enthusiast shall not be liable for any damages, whether incidental, consequential or otherwise, because of any defective wine cellar.

How State Law Applies:
Some states do not allow limitations on how long an implied warranty lasts and/or do not allow the exclusion of incidental or consequential damages, so the above limitations and exclusions may not apply to you. The Limited Warranty gives you specific legal rights, and you may also have other rights which vary from state to state.

Your Cheat Sheet to Wine Serving Temperatures

Too many people pour wine at the wrong temperature destroying its decadent flavors and aromas. Serve your bottlings at perfect temperatures. Here's everything you need to know.

STYLE OF WINE	EXAMPLE	RECOMMENDED SERVING TEMPERATURE
Sweet Wines	Sauternes	Well Chilled 43°F–48°F (6°C– 9°C)
Sparkling Wines	Champagne	Chilled 45°F–49°F (7°C– 9°C)
Light-, Medium-Bodied White Wines	Chenin Blanc	Chilled 45°F–49°F (7°C– 9°C)
Full-Bodied White Wines	Oaked Chardonnay	Lightly Chilled 48°F–55°F (9°C– 13°C)
Light-Bodied Red Wines	Beaujolais	Room Temperature or Lightly Chilled 53°F–55°F (11°C– 13°C)
Medium-, Full-Bodied Red Wines	Tempranillo	Room Temperature 60°F–65°F (15°C– 18°C)

WINE ENTHUSIAST®
800.648.6058 ▪ Valhalla, New York 10595