Use & Care Guide

Model 795.7414*

Kenmore®

Bottom Freezer Refrigerator

* = color number

MFL67227109

Transform SR Brands Management LLC
Hoffman Estates, IL 60179 U.S.A.

www.kenmore.com

Kenmore®

TABLE OF CONTENTS

Warranty 3

Product Record 4

Important Safety Instructions 4-6

Electrical & Grounding Requirements 7

Parts and Features 8

Refrigerator Installation 9-16

Unpacking Your Refrigerator 9

Dimensions and Clearances 9

Prior to Use 10

Installation 10

Removing/Replacing Refrigerator and Freezer Handles and Doors 11-15

Leveling and Door Alignment 16

Using Your Refrigerator 17-31

Setting the Controls 17-18

Smart Features 19-21

In-Door Ice Bin 22

Automatic Icemaker 23-24

Food Storage Guide 25

► **Refrigerator Section**

Water Dispenser 26

Refrigerator Shelves 27

Humidity Controlled Crispers 28

Temperature Controlled Pantry Drawer 28

Door Bins 29

Replacing the Air Filter 29

► **Freezer Section**

Extra Ice Bin 30

Pullout Drawer 30

Durabase 31

Durabase Divider 31

Water Filter 32-35

Care And Cleaning 36-37

General Cleaning Tips 36

Outside 36

Inside Walls 36

Door Liner And Gaskets 36

Plastic Parts 36

Condenser Coils 36

LED Light Replacement 37

Power Interruptions 37

When You Go On Vacation 37

When You Move 37

Connecting the Water Line 38-40

Troubleshooting Guide 41-49

Service ..... Back Cover

WARRANTY

REFRIGERATOR WARRANTY

Kenmore Limited Warranty

WITH PROOF OF SALE the following warranty coverage applies when this appliance is correctly installed, operated and maintained according to all supplied instructions.

One Year on Appliance

FOR ONE YEAR from the date of sale this appliance is warranted against defects in material or workmanship. A defective appliance will receive free repair. If the appliance cannot be repaired it will be replaced free of charge.

Lifetime on Storage Bins

FOR AS LONG AS IT IS USED from the date of sale, a free replacement will be supplied for a defective refrigerator or freezer compartment storage bin.* If the defect appears within the first year, a new bin will be installed at no charge. If the defect appears after the first year, a new bin will be supplied but not installed at no charge. This Lifetime warranty covers only storage bins, and does not apply to any other related component or mechanism. You are responsible for the labor cost of bin installation after the first year from the date of sale. This warranty coverage applies for only 90 days from the date of sale if the appliance is ever used for other than private household purposes. *Warranty coverage applies to door bins, drawer bins and basket bins. Defects must be verified by a Sears authorized service representative.

For warranty coverage details to obtain free repair or replacement, visit the web page: www.kenmore.com/warranty

All warranty coverage applies for only 90 DAYS from the sale date if this appliance is ever used for other than private household purposes.

This warranty covers ONLY defects in material and workmanship, and will NOT pay for:

1. Expendable items that can wear out from normal use, including but not limited to filters, belts, bags or screw-in base light bulbs.
2. A service technician to clean or maintain this appliance, or to instruct the user in correct appliance installation, operation and maintenance.
3. Service calls to correct appliance installation not performed by Sears authorized service agents, or to repair problems with house fuses, circuit breakers, house wiring, and plumbing or gas supply systems resulting from such installation.
4. Damage to or failure of this appliance resulting from installation not performed by Sears authorized service agents, including installation that was not in accord with electrical, gas or plumbing codes.
5. Damage to or failure of this appliance, including discoloration or surface rust, if it is not correctly operated and maintained according to all supplied instructions.
6. Damage to or failure of this appliance, including discoloration or surface rust, resulting from accident, alteration, abuse, misuse or use for other than its intended purpose.
7. Damage to or failure of this appliance, including discoloration or surface rust, caused by the use of detergents, cleaners, chemicals or utensils other than those recommended in all instructions supplied with the product.
8. Damage to or failure of parts or systems resulting from unauthorized modifications made to this appliance.
9. Service to an appliance if the model and serial plate is missing, altered, or cannot easily be determined to have the appropriate certification logo.

Disclaimer of implied warranties; limitation of remedies

Customer's sole and exclusive remedy under this limited warranty shall be product repair or replacement as provided herein. Implied warranties, including warranties of merchantability or fitness for a particular purpose, are limited to one year on the appliance and for as long as used on the storage bins, or the shortest period allowed by law. Seller shall not be liable for incidental or consequential damages. Some states and provinces do not allow the exclusion or limitation of incidental or consequential damages, or limitation on the duration of implied warranties of merchantability or fitness, so these exclusions or limitations may not apply to you.

This warranty applies only while this appliance is used in the United States.

This warranty gives you specific legal rights, and you may also have other rights which vary from state to state.

Transform SR Brands Management LLC, Hoffman Estates, IL 60179

PRODUCT RECORD

In the space below, record the date of purchase, model and serial number of your product. You will find the model and serial number printed on an identification label located on the interior liner of the refrigerator compartment. Have these items of information available whenever you contact Sears concerning your product.

Model No._____ Date of Purchase _____

Serial No._____

Save these instructions and attach your sales receipt for future reference.

IMPORTANT SAFETY INSTRUCTIONS

READ ALL INSTRUCTIONS BEFORE USE

Safety Messages

Your safety and the safety of others are very important.

We have provided many important safety messages in this manual and on your appliance. Always read and follow all safety messages.



This is the safety alert symbol.

This symbol alerts you to potential hazards that can kill or injure you and others. All safety messages will follow the safety alert symbol and either the word WARNING or CAUTION.

These words mean:

⚠ WARNING You may be killed or seriously injured if you do not follow instructions.

⚠ CAUTION You may be injured or cause damage to the product if you do not follow instructions.

All safety messages will identify the hazard, tell you how to reduce the chance of injury, and tell you what can happen if the instructions are not followed.

⚠WARNING

To reduce the risk of explosion, fire, death, electric shock, scalding or injury to persons when using this product, follow basic precautions, including the following.

INSTALLATION

- To reduce the risk of injury to persons, adhere to all industry recommended safety procedures including the use of long-sleeved gloves and safety glasses.
- Never attempt to operate this appliance if it is damaged, malfunctioning, partially disassembled, or has missing or broken parts, including a damaged cord or plug.
- Only connect this product to a dedicated grounded electrical outlet rated for use with this product (115 V, 60 Hz, AC only). It is the user's responsibility to replace a standard 2-prong wall outlet with a standard 3-prong wall outlet.
- Do not use an outlet that can be turned off with a switch. Do not use an extension cord.
- The appliance must be positioned for easy access to a power source.
- When moving the refrigerator, be careful not to roll over or damage the power cord.
- Contact an authorized service center when installing or relocating the refrigerator.
- Do not, under any circumstances, cut or remove the third (ground) prong from the power cord.

- Keep packing materials out of the reach of children. Packaging material can be dangerous for children. There is a risk of suffocation.
- Do not install the refrigerator in a damp or dusty place where insulation on electrical parts may deteriorate.
- Do not place the refrigerator in direct sunlight or expose it to the heat from heating appliances such as stoves or heaters.
- Do not bend or pinch the power cord excessively or place heavy objects on it.

OPERATION

- This appliance is intended to be used in household and similar applications such as:

  - staff kitchen areas in shops, offices and other working environments;

  - farm houses and by clients in hotels, motels and other residential type environments;

  - bed and breakfast type environments;

  - catering and similar non-retail applications.
- This product is not to be used for special purposes such as the storage of medicine or test materials or for use on ships, etc.
- DO NOT allow children to climb, stand, or hang on the refrigerator doors or on the shelves in the refrigerator. They could damage the refrigerator and seriously injure themselves.
- Do not allow children to climb into the refrigerator. They could be trapped and suffocated.
- Children should be supervised to ensure that they do not play with the refrigerator.
- Keep fingers out of pinch point areas; clearances between the doors and cabinets are necessarily small.
- Be careful closing doors when children are nearby.
- Do not touch frozen food or the metal parts in the freezer compartment with wet or damp hands. Doing so may cause frostbite.
- Do not refreeze frozen food that has thawed completely. Doing so may result in a serious health hazard.
- Do not use an adapter plug or plug the power plug into a multi-outlet extension cord.
- If the supply cord is damaged, it must be replaced by the manufacturer or its service agent or a similarly qualified person in order to avoid a hazard.
- Do not operate the refrigerator or touch the power cord with wet hands.
- Do not modify or extend the power cord.
- Do not use an uncertified power outlet. Do not plug appliance into a damaged wall outlet.
- Do not put hands, feet or other objects into the air vents or bottom of the refrigerator. Doing so could result in personal injury or electric shock.
- In the event of a gas leak (propane/LPG), ensure the area is adequately ventilated and contact an authorized service center before resuming use. Do not touch the refrigerator or power cord of the refrigerator.
- Disconnect the power cord immediately and contact an authorized service center if there is a strange noise, odor, or smoke coming from the appliance.
- Do not use any fuse (such as copper, steel wire, etc.) other than a standard fuse.
- Do not place or use an electrical appliance inside the refrigerator, unless it is of a type recommended by the manufacturer.
- Do not put animals inside the appliance.
- Do not place heavy or fragile objects, liquid filled containers, combustible substances, or flammable objects (such as candles and lamps) on the appliance.
- Avoid contact with any moving parts of the ejector mechanism or with the heater that releases the ice cubes.
- If connected to a circuit protected by fuses, use time delay fuse.
- Keep ventilation openings, in the appliance enclosure or in the built-in structure, clear of obstruction.
- Do not use mechanical devices or other means to accelerate the defrosting process, other than those recommended by the manufacturer.
- Do not use electrical appliances inside the food storage compartments of the appliance, unless they are of a type recommended by the manufacturer.
- Do not store explosive substances such as aerosol cans with a flammable propellant in this appliance.
- DO NOT place fingers in the automatic icemaker when the refrigerator is plugged in.
- When dispensing ice from the dispenser, do not use a fragile container.

MAINTENANCE

- Do not use a hair dryer to dry the inside of the refrigerator.
- Do not light a candle to remove odors in the refrigerator.
- In the event of a refrigerant leak, move flammable objects away from the refrigerator. Ensure the area is adequately ventilated and contact an authorized service center.

⚠ WARNING

- Keep flammable materials and vapors, such as gasoline, away from the refrigerator.
- This appliance is not intended for use by persons (including children) with reduced physical, sensory or mental capabilities, or lack of experience and knowledge, unless they have been given supervision or instruction concerning use of the appliance by a person responsible for their safety.
- Unplug the power plug before cleaning or repairing the refrigerator.
- The refrigerator and freezer compartment lights are interior LED lighting, and service should be performed by a qualified technician.
- Unplug the power plug immediately in the event of a blackout or thunderstorm.
- Turn the power off if water or dust penetrates into the refrigerator. Call a service agent.
- Do not store glass containers or soda in the freezer compartment. Contents may expand when frozen, break the container and cause injury.
- Do not store, disassemble or repair the appliance yourself or allow unqualified personnel to do so.

⚠ WARNING: RISK OF CHILD ENTRAPMENT

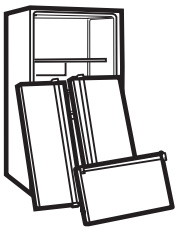

- Junked or abandoned refrigerators are dangerous, even if they are sitting for only a few days. When disposing of the refrigerator, remove the packing materials from the door or take off the doors but leave the shelves in place so that children may not easily climb inside.
- If disposing of a refrigerator, make sure the refrigerant and insulation foam are removed for proper disposal by a qualified servicer. If you release the refrigerant or throw away the insulation foam, you may be fined or imprisoned in accordance with the relevant environmental law. Insulation foam contains flammable blowing gas.
- When discarding the appliance, remove the door gasket while leaving the shelves and baskets in place, and keep children away from the appliance.

⚠ WARNING: RISK OF FIRE AND FLAMMABLE MATERIALS



- This appliance contains a small amount of isobutane refrigerant (R600a), which is combustible. When transporting and installing the appliance, care should be taken to ensure that no parts of the refrigerating circuit are damaged. Refrigerant squirting out of the pipes could ignite or cause an eye injury. If a leak is detected, avoid any naked flames or potential sources of ignition and air the room in which the appliance is standing for several minutes.
- In order to avoid the creation of a flammable gas air mixture if a leak in the refrigerating circuit occurs, the size of the room in which the appliance may be sited depends on the amount of refrigerant used. The room must be 10.8 square feet (1 square meter) in size for every 8g of R600a refrigerant inside the appliance. The amount of refrigerant in your particular appliance is shown on the identification plate inside the appliance. Never start up an appliance showing any signs of damage. If in doubt, consult your dealer.

CFC/HCFC DISPOSAL

Your old refrigerator may have a cooling system that used CFCs or HCFCs (chlorofluorocarbons or hydrochlorofluorocarbons). CFCs and HCFCs are believed to harm stratospheric ozone if released to the atmosphere. Other refrigerants may also cause harm to the environment if released to the atmosphere.

If you are throwing away your old refrigerator, make sure the refrigerant is removed for proper disposal by a qualified technician. If you intentionally release refrigerant, you may be subject to fines and imprisonment under provisions of environmental legislation.

ELECTRICAL & GROUNDING REQUIREMENTS

TO CONNECT ELECTRICITY

⚠ WARNING

Electrical Shock Hazard

FOR PERSONAL SAFETY, this appliance must be properly grounded. Have the wall outlet and the circuit checked by a qualified electrician to make sure the outlet is properly grounded.

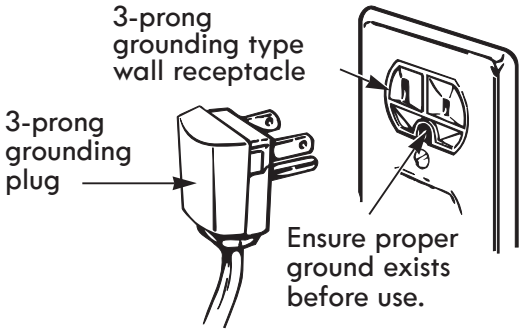

USE OF EXTENSION CORDS

⚠ **WARNING: Do not use extension cords or ungrounded (two-prong) adaptors. Because of potential safety hazards under certain conditions, the use of an extension cord is not recommended.** However, if you still elect to use an extension cord, it is absolutely necessary that it be a UL-listed (USA), 3-wire grounding type appliance extension cord having a grounding type plug and outlet, and that the electrical rating of the cord be 15 amperes (minimum) and 120 volts.

Use of an extension cord will increase the clearance needed for the back of the refrigerator.

⚠ WARNING

Replacing Electrical Cord

To avoid hazard, damaged power cords must be replaced by the manufacturer or its service agent or a similarly qualified technician. Do not operate the appliance with a damaged power cord.

RECOMMENDED GROUNDING METHOD

The refrigerator should always be plugged into its own individual properly grounded electrical outlet rated for 115 Volts, 60 Hz, AC only, and fused at 15 amperes (minimum). This provides the best performance and also prevents overloading house wiring circuits which could cause a fire hazard from overheated wires. It is recommended that a separate circuit serving only this appliance be provided.

Use a receptacle that cannot be turned off with a switch or pull chain. Do not use an extension cord.

Where a standard two-prong wall outlet is encountered, it is your personal responsibility and obligation to have it replaced with a properly grounded three-prong wall outlet.

⚠ CAUTION

To reduce the risk of minor or moderate injury to persons, malfunction, or damage to the product or property when using this product, follow basic precautions, including the following.

INSTALLATION

- Do not install the refrigerator where there may be a danger of the unit falling.
- The refrigerator must be properly installed in accordance with the Installation Instructions.

OPERATION

- Do not use aerosols near the refrigerator.
- This appliance is intended to be used only in domestic and similar applications.
- Do not strike or apply excessive force to any glass surface. Do not touch glass surfaces if they are cracked or broken.
- Do not overfill or pack items too tightly into door bins. Doing so may cause damage to the bin or personal injury if items are removed with excessive force.
- Do not hang on to or place heavy objects on the refrigerator's dispenser.

MAINTENANCE

- Do not use strong detergents like wax or thinners for cleaning. Clean with a soft cloth.
- Remove foreign objects (such as dust and water) from the prongs of the power plug and contact areas. Do not use a wet or damp cloth when cleaning the plug.
- Do not spray water directly on the inside or outside of the refrigerator.
- Do not clean glass shelves or covers with warm water when they are cold. They may break if exposed to sudden temperature changes.

SAVE THESE INSTRUCTIONS

PARTS AND FEATURES

Use this page to become more familiar with the parts and features of your refrigerator.

NOTE: The refrigerator you have purchased may have some or all of the items listed below. The locations of the features shown below may not match your model.

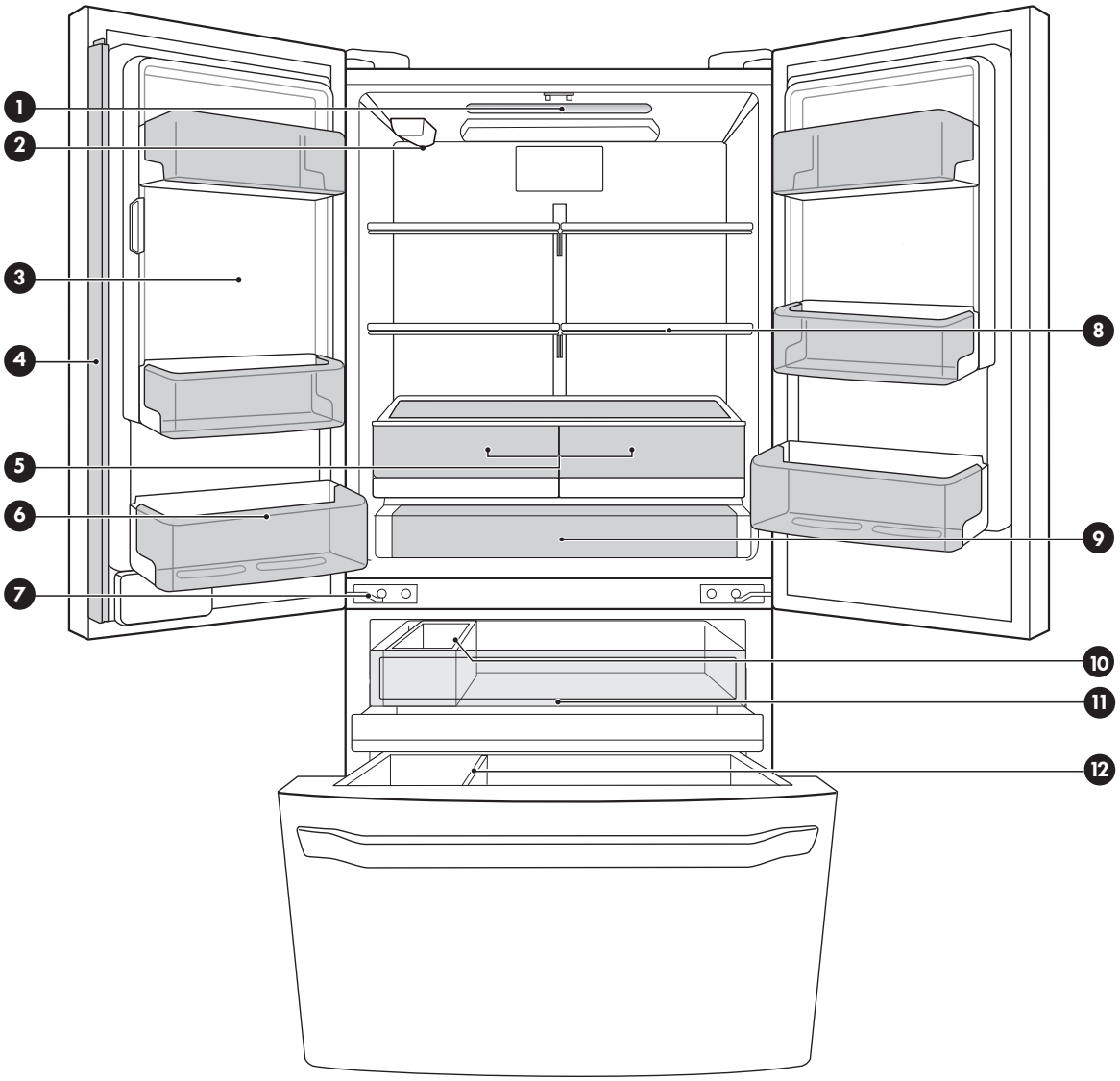

1. LED interior lighting
2. Water filter
3. In-door icemaker
4. Folding door mullion
5. Humidity-controlled crisper
6. Fixed door bin
7. Auto-closing hinge
8. Adjustable refrigerator shelf
9. Pantry drawer
10. Extra ice bin
11. Pullout drawer
12. Durabase and Durabase divider

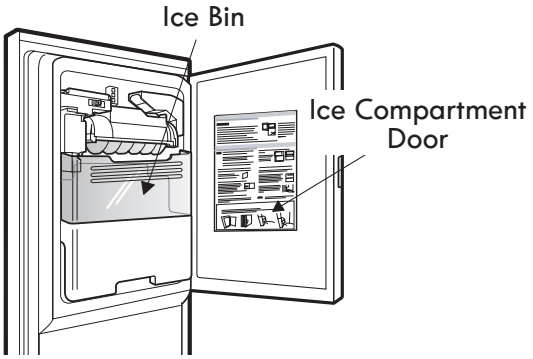

REFRIGERATOR INSTALLATION

⚠WARNING

Excessive Weight Hazard:

Use two or more people to move and install the refrigerator. Failure to do so can result in back or other injury.

⚠WARNING

Excessive Weight Hazard:

Your refrigerator is heavy. When moving the refrigerator for cleaning or service, be sure to protect the floor. Always pull the refrigerator straight out when moving it. Do not wiggle or walk the refrigerator when trying to move it, as floor damage could occur.

⚠WARNING

Explosion Hazard:

Keep flammable materials and vapors, such as gasoline, away from the refrigerator. Failure to do so can result in fire, explosion, or death.

UNPACKING YOUR REFRIGERATOR

Remove tape and any temporary labels from your refrigerator before using. Do not remove any warning-type labels, the model and serial number label, or the Tech Sheet that is located under the front of the refrigerator, behind the base grille.

To remove any remaining tape or glue, rub the area briskly with your thumb. Tape or glue residue can also be easily removed by rubbing a small amount of liquid dish soap over the adhesive with your fingers. Wipe with warm water and dry.

Do not use sharp instruments, rubbing alcohol, flammable fluids, or abrasive cleaners to remove tape or glue. These products can damage the surface of your refrigerator.

Refrigerator shelves are installed in the shipping position. Please reinstall shelves according to your individual storage needs.

DIMENSIONS AND CLEARANCES

- Check the dimensions of the appliance and the installation path to ensure there is sufficient room to move the refrigerator through doors or narrow openings.
- If an opening is too narrow to fit the refrigerator through, remove the refrigerator doors. See Removing and Replacing Refrigerator Doors in this manual.
- The installation location chosen for the refrigerator should allow space behind the unit for connections and airflow and space in front to open the doors and drawers.
- Too small of a distance from adjacent items may result in lowered freezing capability and increased electricity consumption charges. Allow at least 27 inches (686 mm) in front of the refrigerator to open the doors, and at least 2 inches (51 mm) between the back of the refrigerator and the wall.

Dimensions and Clearances

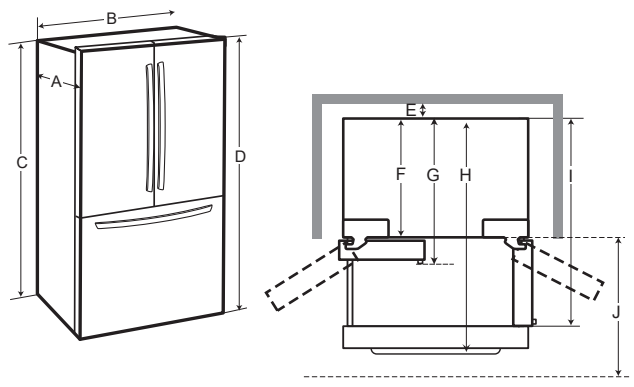

A	**Depth without handle**	33.3"	(845 mm)
B	**Width**	32.8"	(833 mm)
C	**Height to top of case**	68.5"	(1740 mm)
D	**Height to top of hinge**	69.8"	(1774 mm)
E	**Back clearance**	2"	(51 mm)
F	**Depth without door**	29.4"	(748 mm)
G	**Depth with handle**	35.4"	(899 mm)
H	**Total depth with freezer drawer open**	53.3"	(1355 mm)
I	**Total depth with door open 90°**	46.7"	(1185 mm)
J	**Front clearance**	27"	(686 mm)

PRIOR TO USE

1. Clean your refrigerator thoroughly and wipe off all dust that accumulated during shipping.

2. Install accessories such as ice cube bin, drawers, shelves, etc., in their proper places. They are packed together to prevent possible damage during shipment.

3. Allow your refrigerator to run for at least 2 to 3 hours before putting food in it. Check the flow of cold air in the freezer compartment to ensure proper cooling. Your refrigerator is now ready for use.

INSTALLATION

The refrigerator should always be plugged into its own individual properly grounded electrical outlet rated for 115 Volts, 60 Hz, AC only, and fused at 15 amperes (minimum). This provides the best performance and also prevents overloading house wiring circuits which could cause a fire hazard from overheated wires. It is recommended that a separate circuit serving only this appliance be provided.

WARNING

Shock Hazard:

To reduce the risk of electric shock, do not install the refrigerator in a wet or damp area.

INSTALLATION (continued)

1. To avoid noise and vibration, the unit must be leveled and installed on a solidly constructed floor. If required, adjust the leveling legs to compensate for unevenness of the floor. The front should be slightly higher than the rear to aid in door closing. Leveling legs can be turned easily by tipping the cabinet slightly. Turn the leveling legs counterclockwise to raise the unit or clockwise to lower it. (See LEVELING AND DOOR ALIGNMENT.)

NOTE: Installing on carpeting, soft tile surfaces, a platform or weakly supported structure is not recommended.

2. Install this appliance in an area where the temperature is between 55°F (13°C) and 110°F (43°C). If the temperature around the appliance is too low or high, cooling ability may be adversely affected.

3. Select a place where a water supply can be easily connected for the automatic icemaker.

IMPORTANT: Never use old or used hoses. Always use the new hoses supplied with the appliance.

NOTE: The water pressure must be between 20 and 120 psi on models without a water filter and between 40 and 120 psi on models with a water filter.

4. Too small of a distance from adjacent items may result in lowered freezing capability and increased electricity consumption charges. Allow at least 24 inches (61 cm) in front of the refrigerator to open the doors.

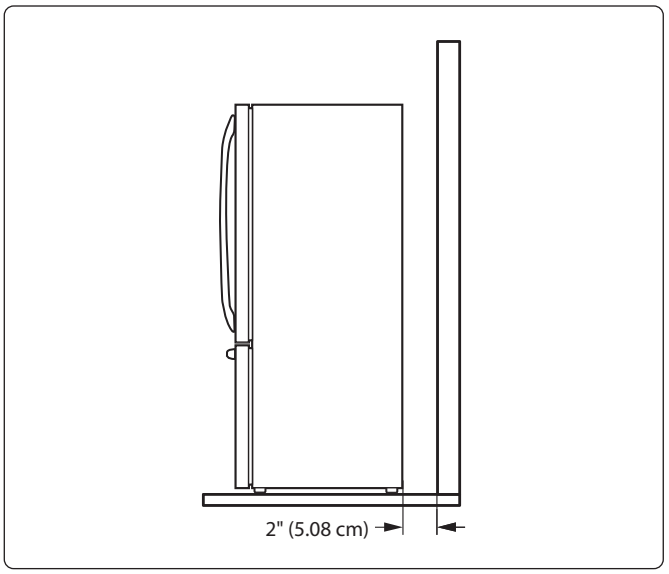

NOTE: Removing the doors is the recommended procedure when it is necessary to move the refrigerator through a narrow opening. If it is necessary to remove the handles, follow the directions below.

HOW TO REMOVE REFRIGERATOR DOOR HANDLE

NOTE: Handle appearance may vary from the illustrations on this page.

Removing Refrigerator Handle

Loosen the set screws with a $^{3}/_{32}$ in. (2.5 mm) Allen wrench and remove the handle.

NOTE: If the handle mounting fasteners need to be tightened or removed, use a ¼ in. (6.4 mm) Allen wrench.

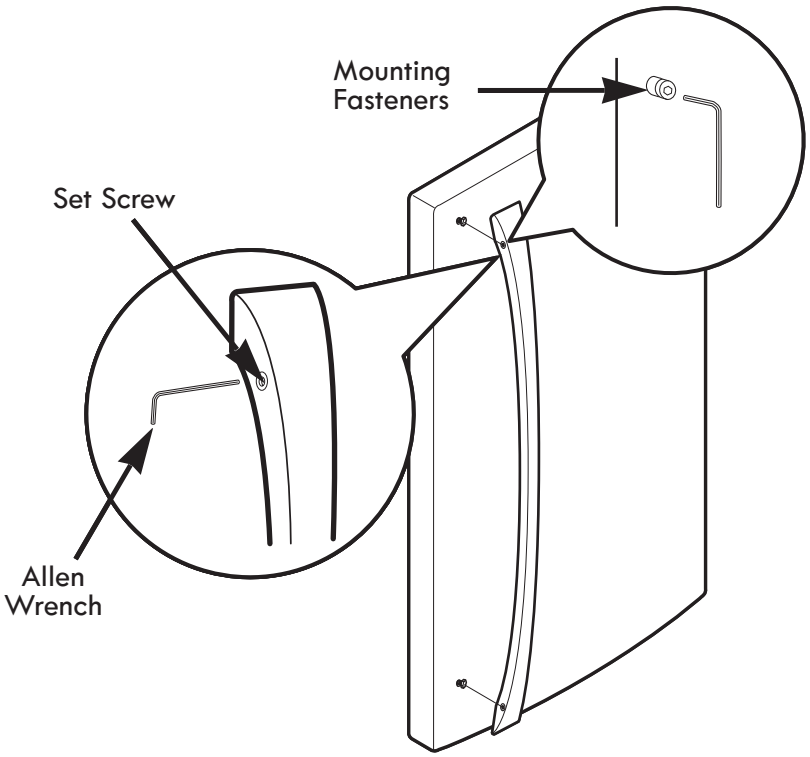

HOW TO REPLACE REFRIGERATOR DOOR HANDLE

NOTE: Handle appearance may vary from the illustrations on this page.

Replacing Refrigerator Door Handle

Place the handle on the door by fitting the handle footprints over the mounting fasteners and tightening the set screws with a $^{3}/_{32}$ in (2.5 mm) Allen wrench.

NOTE: If the handle mounting fasteners need to be tightened or replaced, use a ¼ in. (6.4 mm) Allen wrench.

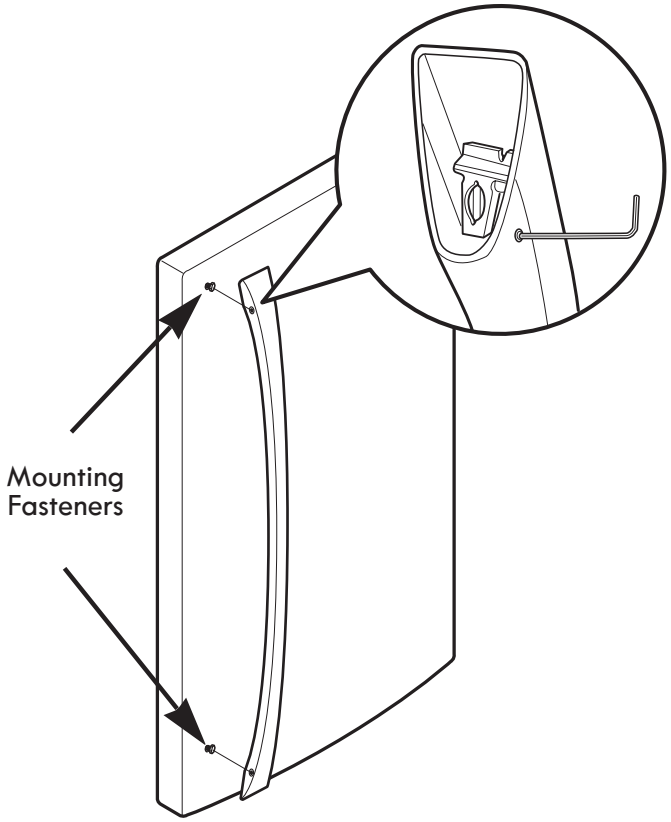

NOTE: Removing the doors is the recommended procedure when it is necessary to move the refrigerator through a narrow opening. If it is necessary to remove the handles, follow the directions below.

HOW TO REMOVE FREEZER DOOR HANDLE

NOTE: Handle appearance may vary from the illustrations on this page.

Removing Freezer Drawer Handle

Loosen the set screws located on the lower side of the handle with a $^{3}/_{32}$ in. (2.5 mm) Allen wrench and remove the handle.

NOTE: If the handle mounting fasteners need to be tightened or removed, use a ¼ in. (6.4 mm) Allen wrench.

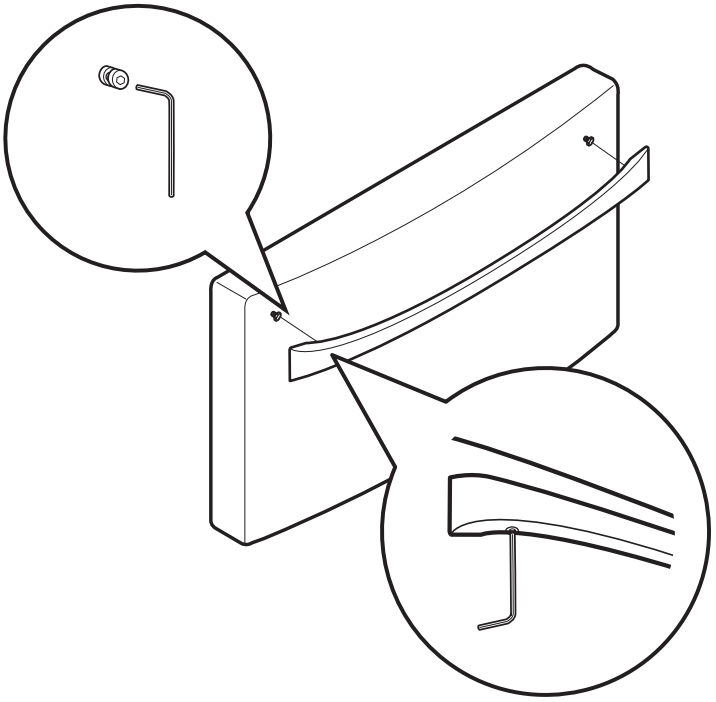

HOW TO REPLACE FREEZER DOOR HANDLE

NOTE: Handle appearance may vary from the illustrations on this page.

Replacing Freezer Drawer Handle

Place the handle on the door by fitting the handle footprints over the mounting fasteners and tightening the set screws with a $^{3}/_{32}$ in. (2.5 mm) Allen wrench.

NOTE: If the handle mounting fasteners need to be tightened or replaced, use a ¼ in. (6.4 mm) Allen wrench.

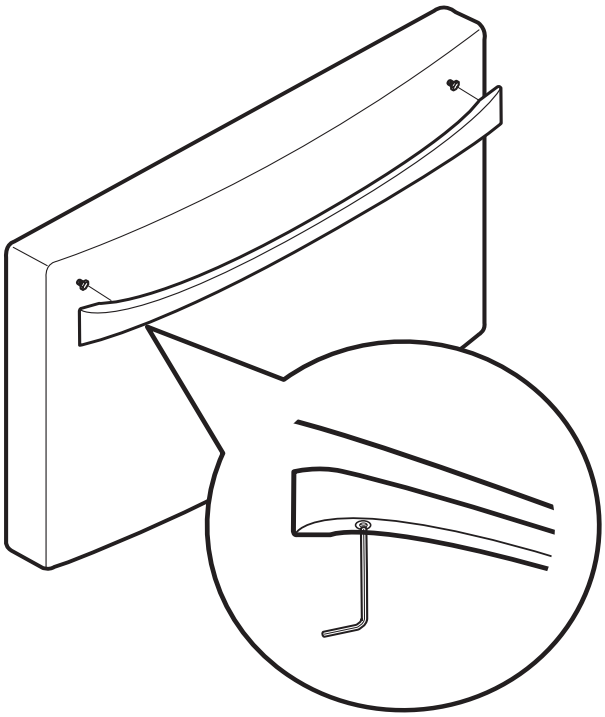

⚠ WARNING

When assembling or disassembling the handles:

- Grasp the handle firmly to ensure it will not drop or cause injury.
- Prevent the handle from swinging toward nearby people or animals.
- Insert the bracket hole of the handle into the stopper bolt of the door exactly, then assemble the set screws to fix the handle in place.
- Check for any gap between the door and handle after the handle is fixed in place.

REMOVING AND REPLACING REFRIGERATOR DOORS

⚠ WARNING

Excessive Weight Hazard:

Use two or more people to remove and install the refrigerator doors. Failure to do so can result in back or other injury.

⚠ WARNING

Electrical Shock Hazard

- Disconnect the electrical supply to the refrigerator before installing. Failure to do so could result in serious injury or death.
- Do not put hands, feet or other objects into the air vents or bottom of the refrigerator. You may be injured or receive an electrical shock.

Tools Needed

3/32" Allen wrench
1/8" Allen wrench
1/4" Allen wrench

To remove the left refrigerator door:

The water supply lines must be disconnected at the back of the refrigerator. Remove the clip in the joint area. Push the water supply tube down, hold the collet ring down (1), and pull the water tube out of the collet on the connector.

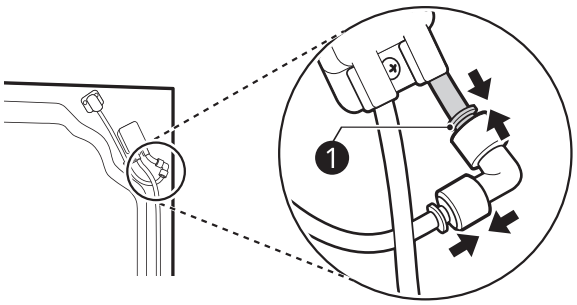

Dissassembling/assembling the water lines

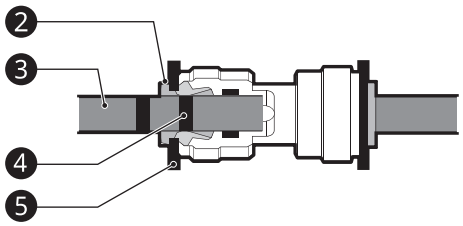

❷ Collet ❸ Tube ❹ Insert line ❺ Clip

⚠ CAUTION: Before you begin, remove food and bins from the doors.

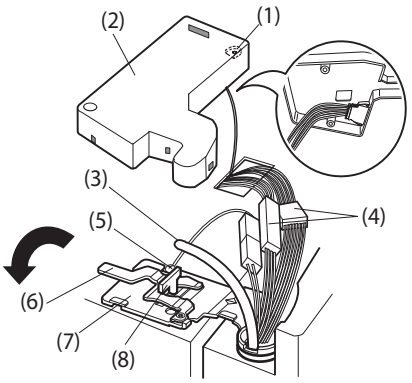

1. Open the door. Remove the top hinge cover screw (1). Lift up the cover (2).
2. Disconnect the wire harness and remove the cover.
3. Pull out the water line (3).
4. Disconnect all wire harnesses (4).
5. Remove the grounding screw (5).
6. Rotate the hinge lever (6) counterclockwise. Lift the top hinge (7) free of the hinge lever latch (8).

⚠ CAUTION: When lifting the hinge free of the latch, be careful that the door does not fall forward.

7. Lift the door from the middle hinge pin and remove the door.
8. Place the door, inside facing up, on a non-scratching surface.

To remove the right refrigerator door:

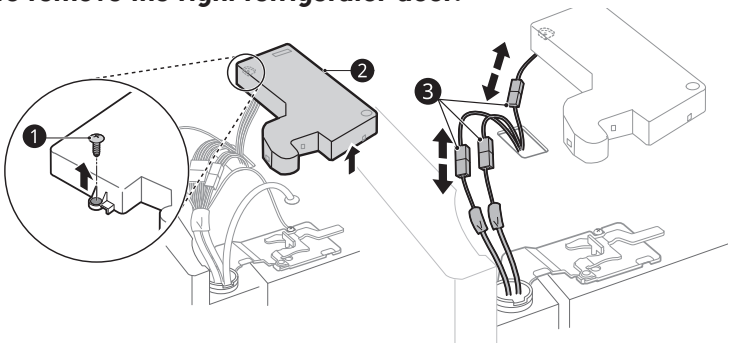

1. Open the door. Remove the top hinge cover screw (1). Lift up the cover (2).
2. Disconnect the wire harness and remove the cover.
3. Disconnect all the wire harnesses (3).
4. Rotate the hinge lever clockwise. Lift the top hinge free of the hinge lever latch.

⚠ CAUTION: When lifting the hinge free of the latch, be careful that the door does not fall forward.

5. Lift the door from the middle hinge pin and remove the door.
6. Place the door, inside facing up, on a non-scratching surface.

Reinstalling the Refrigerator Door

► **Left Door**

1. Lower the door onto the middle hinge pin (10).
2. Fit the top hinge (7) over the hinge lever latch (8) and into place. Rotate the lever (6) clockwise to secure the hinge.
3. Install the grounding screw (5) and connect the wire harnesses (4).
4. Push the water tube (3) located at the top of the left door into the hole beside the left hinge on the top of the cabinet until it exits through the back.
5. Insert the water supply tube (3) into the connector until you see only one insert line. Fully insert the tube over 5⁄8 in. (15 mm).
6. Hook the tabs on the left side of the hinge cover (1) under the edge of the top hinge (7) and position the cover in place. Insert and tighten the cover screw (1).

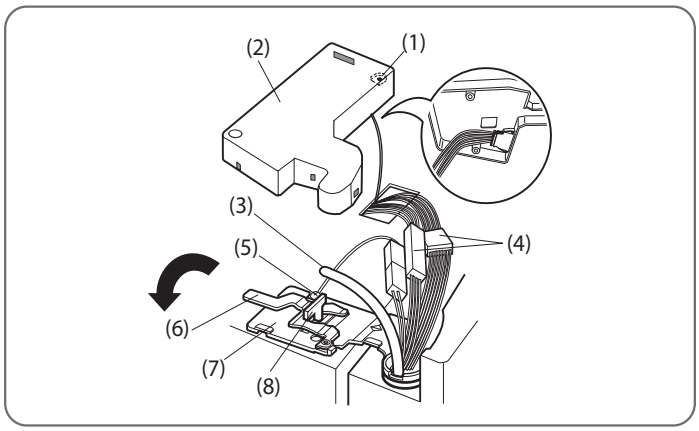

► **Right Door**

1. Lower the door onto the middle hinge pin (9).
2. Fit the top hinge (4) over the hinge lever latch (5) and into place. Rotate the lever (3) counterclockwise to secure the hinge.
3. Connect the wire harnesses.
4. Hook the tabs on the right side of the hinge cover (2) under the edge of the top hinge (4) and position the cover in place. Insert and tighten the cover screw (1).

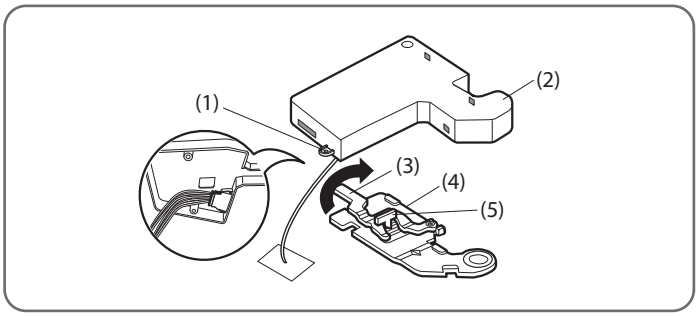

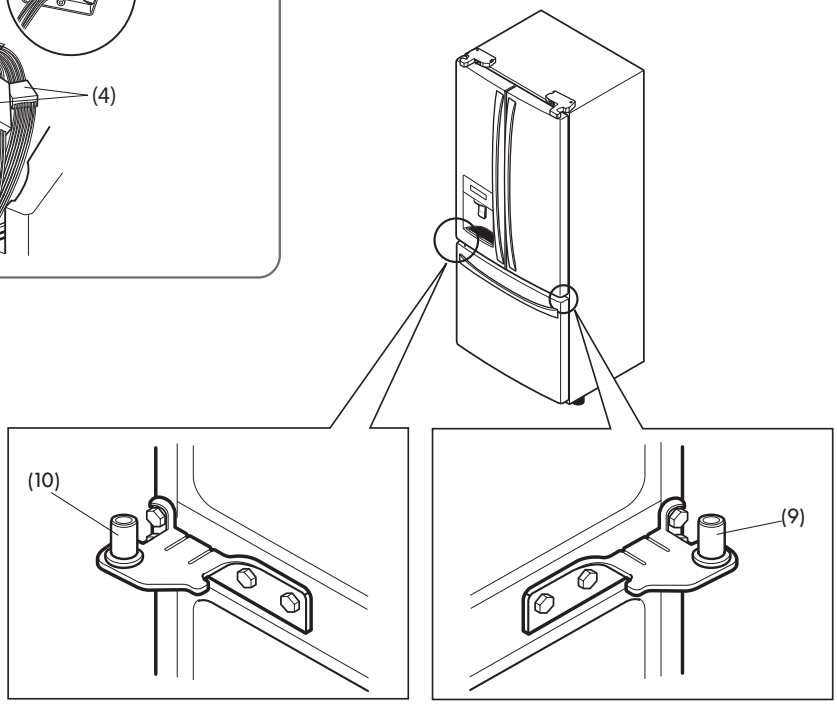

⚠CAUTION

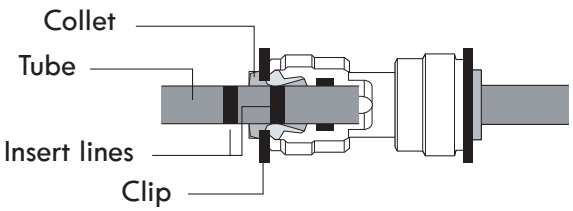

After inserting, pull the tube to make sure that it is secure and reinsert the clip.

HOW TO REMOVE THE FREEZER DRAWER

⚠ **WARNING:** Use two or more people to remove and install the freezer drawer. Failure to do so can result in back or other injury.

⚠ **CAUTION:** Do not hold the handle when removing or replacing the drawer. The handle may come off, resulting in personal injury.

NOTE: In the following figures, the Pullout Drawer located above the freezer drawer is not shown for clarity.

Pull the drawer open to full extension. Remove the lower basket ① by lifting the basket from the rail system.

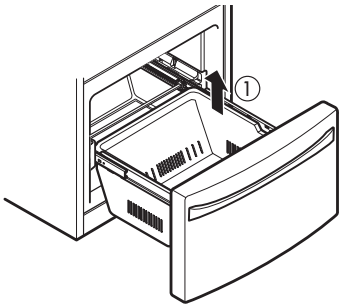

Remove the screw from the rail on both sides.

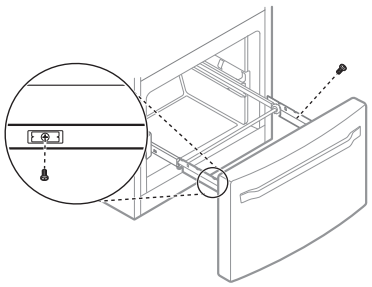

Grasp the drawer on each side and pull it up to separate it from the rails.

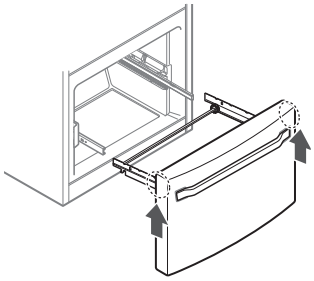

Slide both rails in completely.

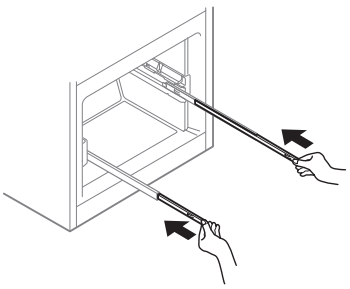

HOW TO INSTALL THE FREEZER DRAWER

Pull both rails out until they are fully extended.

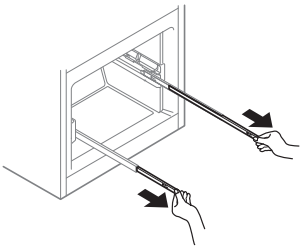

Grasp the drawer on each side and hook the door supports into the rail tabs located on both sides.

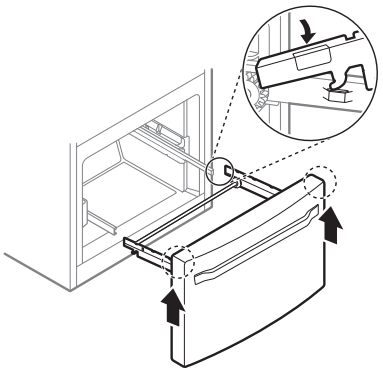

Lower the door into its final position and insert the screws in the rails on both sides.

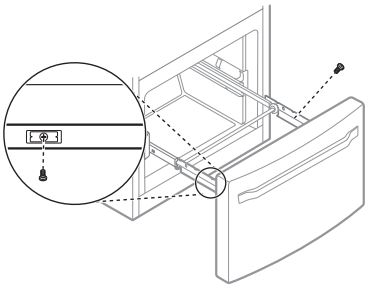

With the drawer pulled out to full extension, insert the Durabase basket ④ in the rail assembly.

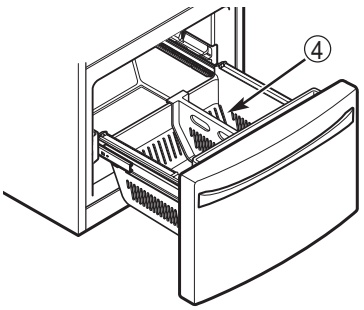

⚠ **WARNING:**

- If the Durabase divider is removed, there is enough open space for children or pets to crawl inside. To prevent accidental child and pet entrapment or suffocation, DO NOT allow them to touch or go near the freezer drawer.
- DO NOT step or sit down on the freezer drawer.

LEVELING AND DOOR ALIGNMENT

LEVELING

After installing, plug the refrigerator's power cord into a 3-prong grounded outlet and push the refrigerator into the final position.

Your refrigerator has two front leveling legs—one on the right and one on the left. Adjust the legs to alter the tilt from front-to-back or side-to-side. If your refrigerator seems unsteady, or you want the doors to close more easily, adjust the refrigerator's tilt using the instructions below:

NOTE: Tools required: $^{11}/_{16}$" (18mm) wrench or flat blade screwdriver.

1. Turn the leveling leg counterclockwise to raise that side of the refrigerator or clockwise to lower it. It may take several turns of the leveling leg to adjust the tilt of the refrigerator.

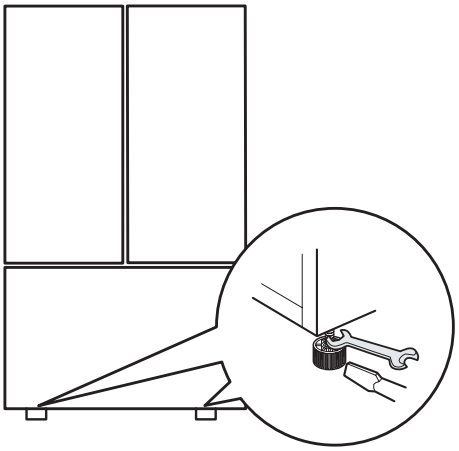

NOTE: Having someone push backward against the top of the refrigerator takes some weight off of the leveling legs. This makes it easier to adjust the legs.

2. Open both doors again and check to make sure that they close easily. If the doors do not close easily, tilt the refrigerator slightly more to the rear by turning both leveling legs counterclockwise. It may take several more turns, and you should turn both leveling legs the same amount.

DOOR ALIGNMENT

Both the left and right refrigerator doors have an adjustable nut, located on the bottom hinge, to raise and lower them to align properly.

If the space between your doors is uneven after the door bins are filled, follow the instructions below to align the doors.

Use the wrench (included with the Use & Care Guide) to turn the nut in the door hinge to adjust the height. Turn the nut clockwise to raise or counterclockwise to lower the door.

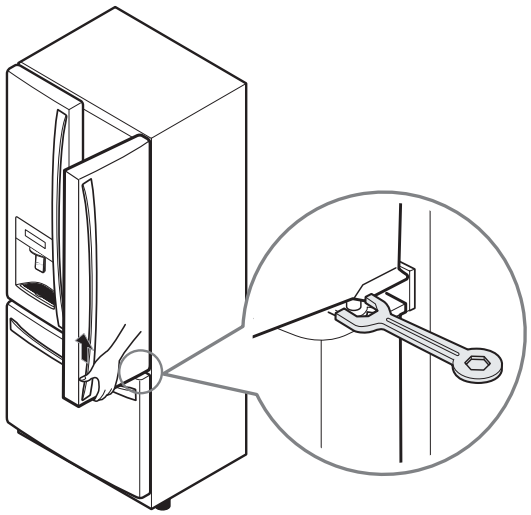

SETTING THE CONTROLS

TEMPERATURE

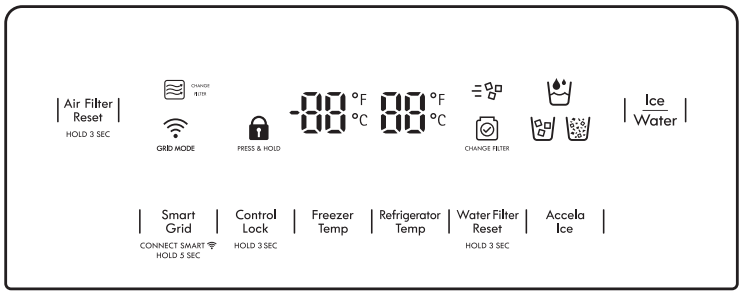

- **The Refrigerator Temp. Control ranges from 33°F to 43°F (1°C to 7°C).** Press the **Refrigerator Temp** button to cycle through the available temperature settings one increment at a time.

- **The Freezer Temp. Control range is from -7°F to 5°F (-23°C to -15°C).** Press the Freezer Temp button to cycle through the available temperature settings one increment at a time.

NOTE: When changing control settings, wait 24 hours before making additional adjustments. The controls are set correctly when milk or juice is as cold as you would like and when ice cream is firm. If the temperature in either compartment is too cold or too warm, change the setting one increment at a time. Wait 24 hours for the change to stabilize before adjusting again.

Temperature Mode Switch Function (°F <->°C)

If you want to convert °F to °C or vice versa, press and hold the **Freezer Temp.** and **Refrigerator Temp.** buttons at the same time for approximately 5 seconds.

AIRFLOW

Cold air circulates from the freezer to the fresh food section and back again through air vents in the wall dividing the two sections. Be sure not to block vents while storing items in your refrigerator. Doing so will restrict airflow and may cause the refrigerator temperature to become too warm or cause interior moisture buildup. (See airflow diagram below.)

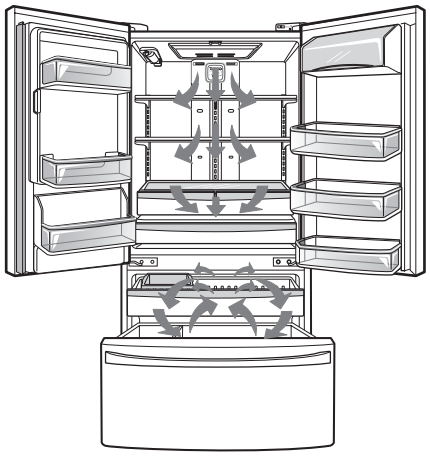

Accela Ice

This function increases both ice making and freezing capabilities.

- Press the Accela Ice button to illuminate the icon and activate the function for 24 hours. The function automatically shuts off after 24 hours.
- Stop the function manually by pressing the button again.

Water Filter Reset

- Replace the water filter when the Change Filter icon turns on. After replacing the water filter, press and hold the **Water Filter Reset** button for 3 seconds to turn the icon off. Replace the water filter approximately every 6 months.

Air Filter Reset

- The **air filter** helps remove odors from the refrigerator.
- Replace the air filter when the Change Filter icon turns on. After replacing the air filter, press and hold the **Air Filter Reset** button for three seconds to turn the icon off. Replace the air filter approximately every six months.

Control Lock

The Control Lock function disables every other button on the display. The dispenser pad is also deactivated.

- When power is initially connected to the refrigerator, the Control Lock function is off.
- To lock the control panel buttons, press and hold the **Control Lock** button until the 🔒 icon appears in the display and the function is activated.
- To disable the function, press and hold the **Lock** button for approximately 3 seconds.

DISPENSER

Select the desired dispenser mode using the Ice/Water button on the control panel. Press the dispenser switch with a glass or other container to dispense water, cubed ice or crushed ice.



⚠ **WARNING:** The dispenser will not work if any door is left open or if the control lock is engaged.

ARTICULATING MULLION

This feature is a metal strip attached to the left door that articulates (rotates) 90 degrees as the door is closed, forming a mullion (base) for the left and right door gaskets to seal against.

⚠ CAUTION

To reduce the risk of scratching the door or breaking the door mullion, make sure that the refrigerator door mullion is always folded in.

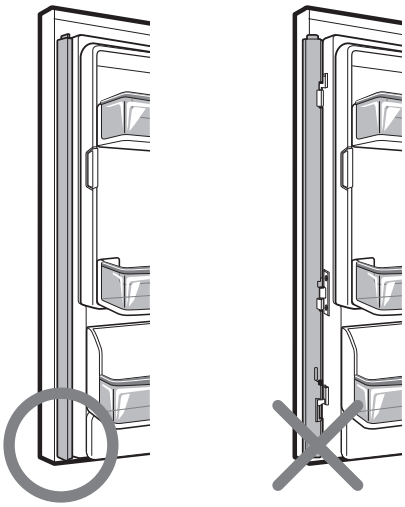

DISPLAY OFF MODE

- When the refrigerator is in the **Display Off Mode,** the display will remain off until a door is opened or a button is pressed. Once on, the display will remain on for 20 seconds.
- To deactivate the **Display Off** Mode, press and hold the **Freezer Temp** and **Accela Ice** buttons at the same time for 5 seconds until the tone sounds (in some models).

Freezer Temp		Accela Ice

⚠ CAUTION

DEMO MODE (FOR STORE USE ONLY)

The **Demo Mode** disables all cooling in the refrigerator and freezer sections to conserve energy while on display in a retail store. When activated, OFF will display on the control panel.



To deactivate/activate:

Open either refrigerator door, and press and hold the Refrigerator button while pressing the Accela Ice button 3 times. The control panel beeps and the temperature settings display to confirm that **Demo Mode** is deactivated. Use the same procedure to activate the **Demo Mode.**

SMART FEATURES

OVERVIEW

Kenmore Smart connectivity transforms your relationship with your home. You can personalize the way Kenmore Smart products operate based on your schedule and daily routines, making life easier and providing greater peace of mind. It does this by letting you link with and manage your Kenmore Smart products on one app, all from trusted brands, from a smart phone, tablet or computer.

This appliance is a connected-ready appliance, allowing you to remotely monitor and control it from your smart phone via the Kenmore® Smart app.

To get started, you will need the following:

- Kenmore Elite® Smart Appliance
- WI-FI home router connected to the internet
- Smart phone
- Kenmore Smart app

For more information about your Kenmore Elite® Smart appliance, please visit www.Kenmore.com/smart.

The Smart Grid function controls energy usage which helps you save energy during peak usage periods. You can override the SMART GRID function at any time (using the Smart Grid button or application).

Smart Grid responds to notification events from your utility company to run high energy-consuming tasks only during off-peak times when electrical demand is lower. These notification events are known as Demand Response (DR) signals. If the refrigerator receives a DR signal from the utility company, the refrigerator will turn on the GRID MODE LED on the refrigerator control panel and regulate power consumption according to the signal received. The refrigerator will respond to the signals received from the utility company as long as the appliance is connected to the internet and Smart Grid is enabled.

DEFINITIONS

Smart LED (white):

Notifies the user that the appliance is connected to the internet.

Smart Grid LED (white):

Notifies the user that the appliance is capable of receiving a signal, known as a Demand Response event, from a utility company's energy management system.

Grid Mode LED (red):

Notifies the user that the appliance is reducing or delaying energy use based on the signal received from a utility company energy management system. The LED will remain illuminated during critical peak pricing (CPP) and real time pricing (RTP) or during a high demand for electricity.

GETTING CONNECTED

You need the following devices and application to use the Smart Grid and other smart features on your refrigerator.

Required Devices: A wireless router, Kenmore Elite Smart Refrigerator, and a mobile device.

Required Application: Kenmore Smart App.

CONNECTING THE REFRIGERATOR

Refer to the Quick Start Guide that came with your smart appliance for detailed instructions on creating a Kenmore account and setting up the appliance for connected operation from your mobile device. For additional assistance, visit http://www.kenmore.com/smart

NOTE: When successfully connected to the internet, the SMART icon LED on the unit control panel will turn ON.

INSTRUCTIONS FOR SMART GRID

IMPORTANT:

You must connect your Kenmore Smart appliance to the internet and then register the appliance to your account in order to use the Smart Grid function.

Consult the Quick Start Guide supplied with the appliance for instructions on how to register your appliance using the Kenmore application (app).

The Smart Grid Button serves two purposes:

1) internet connection or disconnection, 2) enable or disable/override the appliance Demand Response capability.

NOTE: This appliance is a connected-ready appliance, allowing you to remotely monitor and control it from your smart phone via the Kenmore® Smart app.

To connect the refrigerator to the Internet:

Refer to the Quick Start Guide that came with your smart appliance for detailed instructions on creating a Kenmore account and setting up your appliance for connected operation from your smart phone. This Use & Care Guide contains information and instructions for operating your appliance from the appliance control panel. For additional assistance, visit http://www.kenmore.com/smart

NOTE: If no connection is made after 10 minutes, the blinking SMART GRID LED will turn off.

Smart Grid Operation:

Once connected and registered, the appliance is capable of accepting a signal from your electrical company. The signal, known as a Demand Response (DR), will adjust refrigerator operation to reduce power consumption for a period of time ranging from a few minutes up to a maximum of 4 hours. Ice making will be delayed during this time. Opening the refrigerator door may cancel certain DR signals.

The Grid Mode LED (red) will be steadily lit when the signal is in effect. To disable the signal and prevent further signal acceptance, press and release the Smart Grid button. Both the Grid Mode and Smart Grid LED will turn off. Press and release the Smart Grid button again to enable DR signal acceptance capability. The Smart Grid button LED will relight. The Grid Mode LED will light when another DR signal is sent.

FCC Notice

(For transmitter module contained in this product)

This equipment has been tested and found to comply with the limits for a Class B digital device, pursuant to Part 15 of the FCC Rules. These limits are designed to provide reasonable protection against harmful interference in a residential installation. This equipment generates, uses, and can radiate radio frequency energy and, if not installed and used in accordance with the instructions, may cause harmful interference to radio communications. However, there is no guarantee that interference will not occur in a particular installation. If this equipment does cause harmful interference to radio or television reception, which can be determined by turning the equipment off and on, the user is encouraged to try to correct the interference by one or more of the following measures:

- Reorient or relocate the receiving antenna.
- Increase the separation between the equipment and the receiver.
- Connect the equipment to an outlet on a circuit different from that to which the receiver is connected.
- Consult the dealer or an experienced radio/TV technician for help

This device complies with part 15 of the FCC Rules.

Operation is subject to the following two conditions:
1. this device may not cause harmful interference and
2. this device must accept any interference received, including interference that may cause undesired operation of the device.

Any changes or modifications in construction of this device which are not expressly approved by the party responsible for compliance could void the user's authority to operate the equipment.

Open Source Software Notice

To obtain the source code that is contained in this product under LGPL and other open source licenses, visit http://kenmore.com/opensource. In addition to the source code, all referred license terms, warranty disclaimers, and copyright notices are available for download.

FCC RF Radiation Exposure Statement

This equipment complies with FCC radiation exposure limits set forth for an uncontrolled environment. This transmitter must not be co-located or operating in conjunction with any other antenna or transmitter. This equipment should be installed and operated with a minimum distance of 20 cm (7.8 inches) between the antenna and your body. Users must follow the specific operating instructions for satisfying RF exposure compliance.

Wireless LAN Module Specifications	
Model	LCW-004
Frequency Range	2412 to 2462 MHz
Output Power (Max)	< 30 dBm

IN-DOOR ICE BIN

⚠ CAUTION

Keep hands and tools out of the ice compartment door and dispenser chute. Failure to do so may result in damage or personal injury.

The icemaker will stop producing ice when the in-door ice bin is full. If you need more ice, empty the ice bin into the extra ice bin in the freezer compartment. During use, the ice can become uneven causing the icemaker to misread the amount of ice cubes and stop producing ice. Shaking the ice bin to level the ice within it can reduce this problem.

NOTE: Storing cans or other items in the ice bin will damage the icemaker.

Keep the ice compartment door closed tightly. If the ice compartment door is not closed tightly, the cold air in the ice bin will freeze food in the refrigerator compartment. This could also cause the icemaker to stop producing ice.

NOTE: Empty the ice bin if the icemaker is set to OFF for more than a few hours.

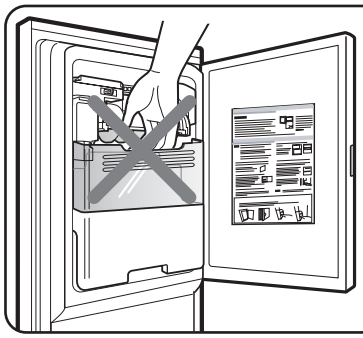

⚠ CAUTION
When handling the ice bin, keep hands away from the icemaker tray area to avoid personal injury.

1. Pull or push the door handle to open or close the ice compartment.

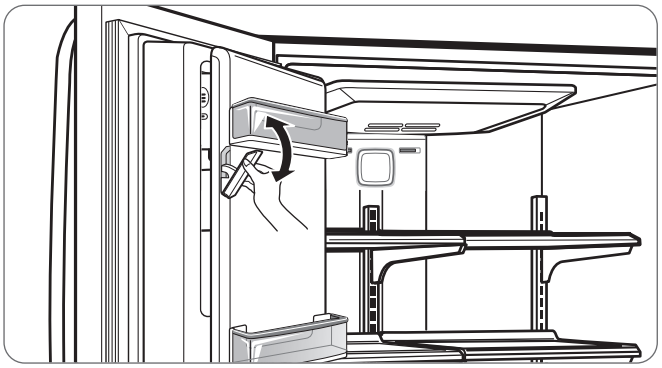

2. To remove the in-door ice bin, grip the front handle, slightly lift the lower part, and slowly pull out the bin as shown.

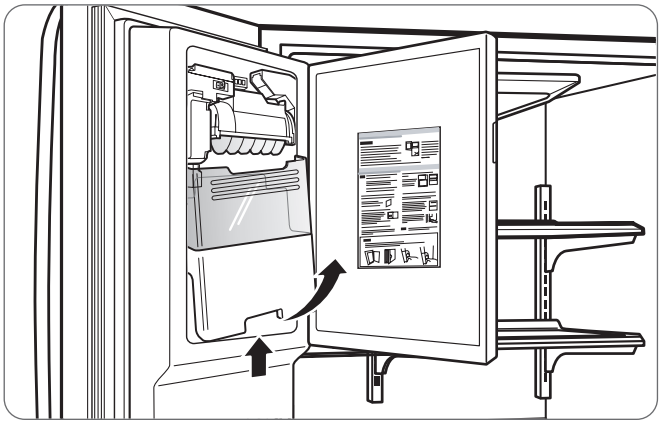

3. To reinstall the in-door ice bin, slightly slant the bin during replacement to avoid contact with the icemaker.

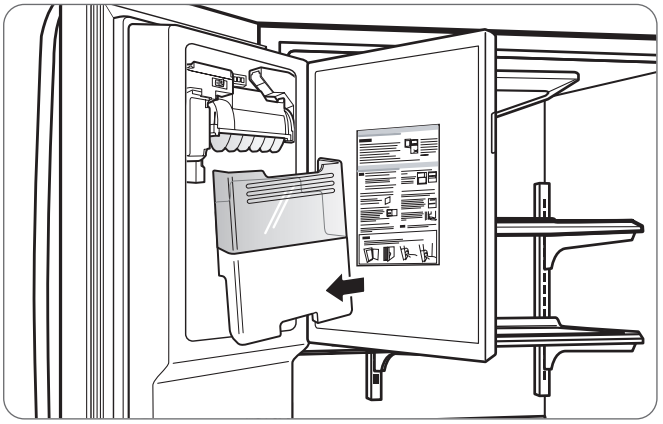

4. Avoid touching the ice-detecting sensor when replacing the ice bin. See the label on the ice compartment door for details.

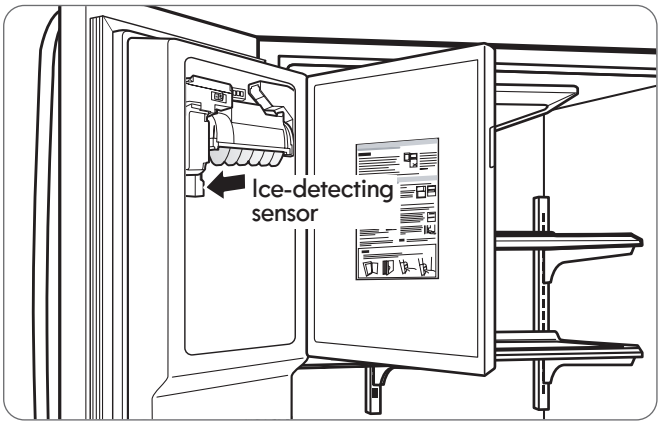

AUTOMATIC ICEMAKER

Ice is made in the automatic icemaker and sent to the dispenser. The icemaker will produce 70–182 cubes in a 24-hour period, depending on freezer compartment temperature, room temperature, number of door openings and other operating conditions.

- It takes about 12 to 24 hours for a newly installed refrigerator to begin making ice. Wait 72 hours for full ice production to occur.
- Ice making stops when the in-door ice bin is full. When full, the in-door ice bin holds approximately 6 to 8 (12-16 oz) glasses of ice.
- To turn off the automatic icemaker, set the icemaker switch to **OFF (O)**. To turn on the automatic icemaker, set the switch to **ON (I)**.
- The water pressure must be between 20 and 120 psi on models without a water filter and between 40 and 120 psi on models with a water filter to produce the normal amount and size of ice cubes.
- Foreign substances or frost on the ice-detecting sensor can interrupt ice production. Make sure the sensor area is clean at all times for proper operation.

⚠WARNING

Personal Injury Hazard

DO NOT place fingers or hands on the automatic ice making mechanism while the refrigerator is plugged in.

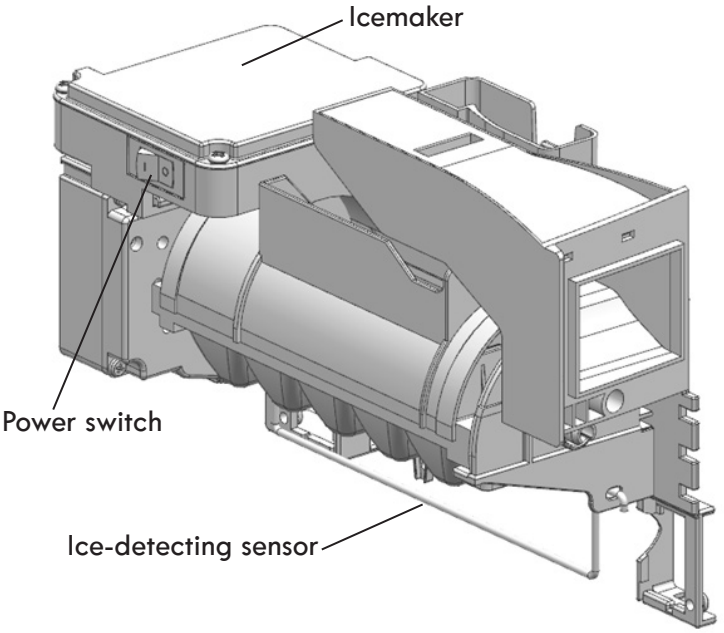

AUTOMATIC ICEMAKER (CONTINUED)

⚠ CAUTION

- The first ice and water dispensed may include particles or odor from the water supply line or the water tank.
- Throw away the first few batches of ice (about 24 cubes). This is also necessary if the refrigerator has not been used for a long time.
- Never store beverage cans or other items in the ice bin for the purpose of rapid cooling. Doing so may damage the icemaker or the containers may burst.
- If discolored ice is dispensed, check the water filter and water supply. If the problem continues, contact a Sears or other qualified service center. Do not use the ice or water until the problem is corrected.
- Keep children away from the dispenser. Children may play with or damage the controls.
- The ice passage may become blocked with frost if only crushed ice is used. Remove the frost that accumulates by removing the ice bin and clearing the passage with a rubber spatula. Dispensing cubed ice can also help prevent frost buildup.
- Never use thin crystal glass or crockery to collect ice. Such containers may chip or break resulting in glass fragments in the ice.
- Dispense ice into a glass before filling it with water or other beverages. Splashing may occur if ice is dispensed into a glass that already contains liquid.
- Never use a glass that is exceptionally narrow or deep. Ice may jam in the ice passage and refrigerator performance may be affected.
- Keep the glass at a proper distance from the ice outlet. A glass held too close to the outlet may prevent ice from dispensing.
- To avoid personal injury, keep hands out of the ice door and passage.
- Never remove the dispenser cover.
- If ice or water dispenses unexpectedly, turn off the water supply and contact Sears Home Service at 1-844-553-6667.

⚠ WARNING

Connect to a potable water supply only.

WHEN YOU SHOULD SET THE ICEMAKER POWER SWITCH TO OFF (O)

- When the water supply will be shut off for several hours.
- When the ice bin is removed for more than one or two minutes.
- When the refrigerator will not be used for several days.

NOTE: The ice bin should be emptied when the icemaker ON/OFF switch is turned to the **OFF** position.

NORMAL SOUNDS YOU MAY HEAR

- The icemaker water valve will buzz as the icemaker fills with water. If the power switch is in the **ON (I)** position, it will buzz even if it has not yet been hooked up to water. To stop the buzzing, move the power switch to **OFF (O)**.

  NOTE: Keeping the power switch in the **ON (I)** position before the water line is connected can damage the icemaker.
- You will hear the sound of cubes dropping into the bin and water running in the pipes as the icemaker refills.

PREPARING FOR VACATION

Set the icemaker power switch to **OFF (O)** and shut off the water supply to the refrigerator.

NOTE: The ice bin should be emptied any time the icemaker ON/OFF switch is turned to the **OFF (O)** position.

If the ambient temperature will drop below freezing, have a qualified technician drain the water supply system to prevent serious property damage due to flooding caused by ruptured water lines or connections.

FOOD STORAGE GUIDE

Wrap or store food in the refrigerator in airtight and moisture-proof material unless otherwise noted. This prevents food odor and taste transfer throughout the refrigerator. For dated products, check date code to ensure freshness.

Items	How to
Butter or margarine	► Keep opened butter in a covered dish or closed compartment. When storing an extra supply, wrap in freezer packaging and freeze.
Cheese	► Store in the original wrapping until you are ready to use it. Once opened, rewrap tightly in plastic wrap or aluminum foil.
Milk	► Wipe milk cartons. For best storage, place milk on interior shelf, not on door shelf.
Eggs	► Store in original carton on interior shelf, not on door shelf.
Fruit	► Wash, let dry, and store in refrigerator in plastic bags or in the crisper. Do not wash or hull fruit until you are ready to use them. Sort and keep fruit in its original container, in a crisper, or store in a completely closed paper bag on a refrigerator shelf.
Leafy vegetables	► Remove store wrapping and trim or tear off bruised and discolored areas. Wash in cold water and drain. Place in plastic bag or plastic container and store in crisper.
Vegetables with skins (carrots, peppers)	► Place in plastic bags or plastic container and store in crisper.
Fish	► Use fresh fish and shellfish the same day purchased.
Leftovers	► Cover leftovers with plastic wrap or aluminum foil, or store in plastic containers with tight lids.

STORING FROZEN FOOD

NOTE: Check a freezer guide or a reliable cookbook for further information about preparing food for freezing or food storage times.

Freezing

Your freezer will not quick-freeze a large quantity of food. Do not put more unfrozen food into the freezer than will freeze within 24 hours (no more than 2 to 3 lbs. of food per cubic foot of freezer space). Leave enough space in the freezer for air to circulate around packages. Be careful to leave enough room at the front so the door can close tightly.

Storage times will vary according to the quality and type of food, the type of packaging or wrap used (how airtight and moisture-proof) and the storage temperature. Ice crystals inside a sealed package are normal. This simply means that moisture in the food and air inside the package have condensed, creating ice crystals.

NOTE: Allow hot foods to cool at room temperature for 30 minutes, then package and freeze. Cooling hot foods before freezing saves energy.

Packaging

Successful freezing depends on correct packaging. When you close and seal the package, it must not allow air or moisture in or out. If it does, you could have food odor and taste transfer throughout the refrigerator and could also dry out frozen food.

Packaging recommendations:

- Rigid plastic containers with tight-fitting lids
- Straight-sided canning/freezing jars
- Heavy-duty aluminum foil
- Plastic-coated paper
- Non-permeable plastic wraps
- Specified freezer-grade self-sealing plastic bags

Follow package or container instructions for proper freezing methods.

Do not use

- Bread wrappers
- Non-polyethylene plastic containers
- Containers without tight lids
- Wax paper or wax-coated freezer wrap
- Thin, semi-permeable wrap

⚠ CAUTION

- Do not keep beverage cans or plastic or glass food containers in the freezer compartment. They may break or burst if they freeze.
- Do not overfill or pack items too tightly into door bins. Doing so may cause damage to the bin or personal injury if items are removed with excessive force.

REFRIGERATOR SECTION

WATER DISPENSER

To dispense cold water, push on the dispenser switch with a glass.

NOTE: The dispenser is equipped with a light that turns on when the dispenser pad is engaged.

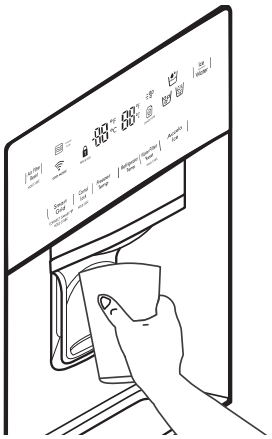

Some dripping may occur after dispensing. Hold your cup beneath the dispenser for a few seconds after dispensing to catch all of the drops.

⚠ **WARNING:** Do not put your fingers up the ice chute opening. Doing so can result in severe injury.

⚠ **CAUTION:** Do not dispense ice into fine china or crystal glasses. China or crystal can break.

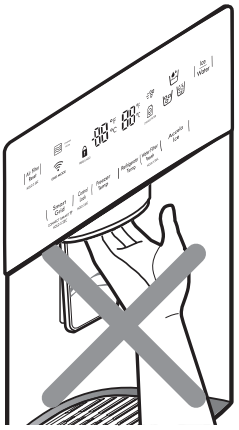

REFRIGERATOR SHELVES

The shelves in your refrigerator are adjustable to meet your individual storage needs. Your model may have glass or wire shelves.

Adjusting the shelves to fit items of different heights will make finding the exact item you want easier. Doing so will also reduce the amount of time the refrigerator door is open which will save energy.

IMPORTANT: Do not clean glass shelves with warm water while they are cold. Shelves may break if exposed to sudden temperature changes or impact.

NOTE: Glass shelves are heavy. Use special care when removing them.

Adjusting Shelves (Cantilever)

Remove shelves from the shipping position and replace shelves in the position you want.

To remove a shelf—Tilt up the front of the shelf ① and lift it from below ②. Pull the shelf out.

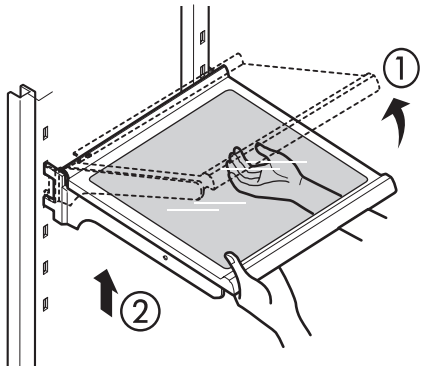

To reinstall a shelf—Tilt the front of the shelf up and guide the shelf hooks into the slots at a desired height. Then, lower the front of the shelf so that the hooks drop into the slots.

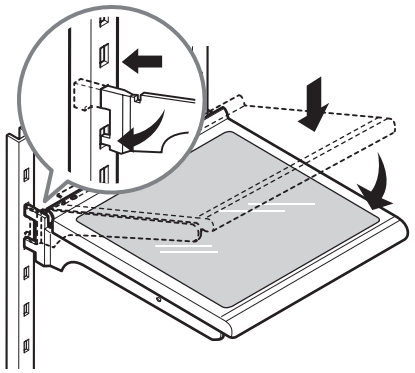

⚠ **CAUTION:** Make sure that shelves are level from one side to the other. Failure to do so may result in the shelf falling or spilling food.

Folding Shelf (on some models)

You can store taller items, such as a gallon container or bottles, by simply pushing the front half of the shelf underneath the back half of the shelf. Pull the front of the shelf toward you to return to a full shelf.

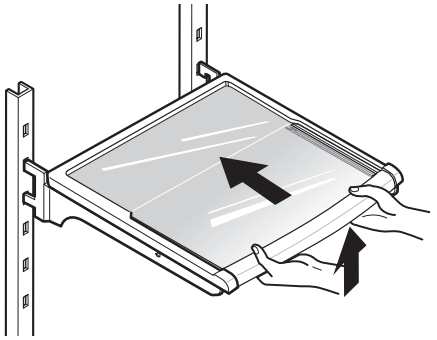

HUMIDITY CONTROLLED CRISPERS

The crispers provide fresher tasting fruit and vegetables by letting you easily control humidity inside the drawer.

You can control the amount of humidity in the moisture-sealed crispers by adjusting the control to any setting between **VEGETABLES** and **FRUIT.**

- **VEGETABLES** keeps moist air in the crisper for best storage of fresh, leafy vegetables.
- **FRUIT** lets moist air out of the crisper for best storage of fruit.

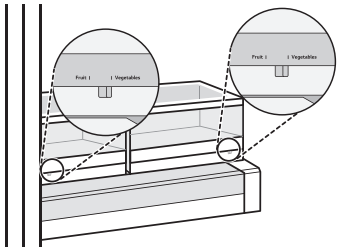

REMOVING THE HUMIDITY CONTROLLED CRISPERS

1. To remove, pull the drawer out to full extension.
2. Lift the front of the crisper up, then pull it straight out.

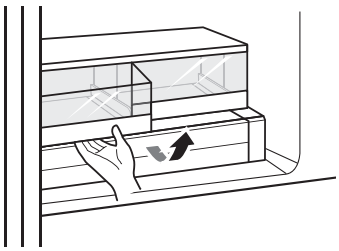

3. Lift the front of the cover up with both hands until it detaches from the back wall of the cabinet, and then pull it out.

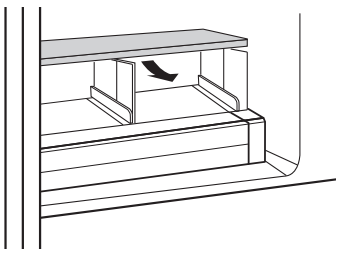

4. To reassemble, insert the cover into the refrigerator with both hands and lower it onto the guides. Slightly tilt up the front of the drawer, insert it into the frame and push it back into place.

TEMPERATURE CONTROLLED PANTRY DRAWER

The **Temperature Controlled Pantry Drawer** provides storage space with a variable temperature control that can keep the compartment colder than the refrigerator section. This drawer can be used for large party trays, deli items and beverages. (This drawer should not be used for vegetables that require high humidity.)

Press the **Select** button to choose between Produce (cold), Deli (colder), and Meat (coldest).

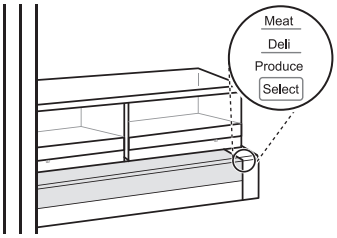

⚠ **CAUTION:** Do not store glass bottles in the pantry. If they freeze, they can break and cause personal injury.

REMOVING THE PANTRY DRAWER

1. To remove, pull the drawer out to full extension.
2. Lift the front of the drawer up, then pull it straight out.

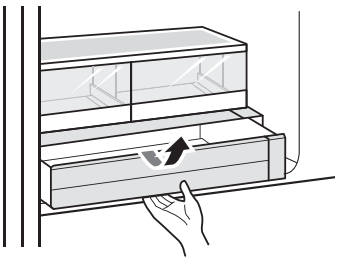

3. To reassemble, slightly tilt up the front of the drawer, insert it into the frame and push it back into place.

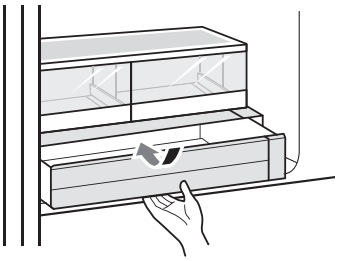

DOOR BINS

The door bins are removable for easy cleaning and adjustment.

1. To remove a bin, simply lift the bin up and pull straight out.
2. To replace a bin, slide it in above the desired support and push down until it snaps into place.

NOTE: Some bins may vary in appearance and will only fit in one location.

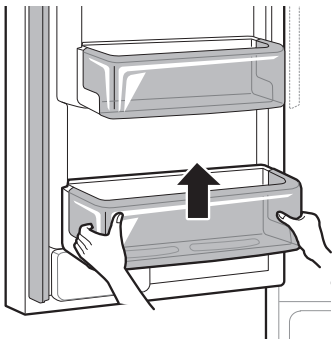

⚠ CAUTION

- Regularly detach and wash the storage bins and shelves; the can become easily contaminated by food.
- Do not apply excessive force while detaching or assembling the storage bins.
- Do not use the dishwasher to clean the storage bins and shelves.

REPLACING THE AIR FILTER

Replace the air filter:

- Approximately every six months.
- When the CHANGE FILTER light turns on.

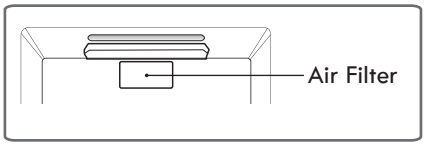

1. Remove the old filter.

Turn the filter cover to the left to detach it from the refrigerator wall. The filter is located on the inside of the filter cover. Remove the filter from the cover.

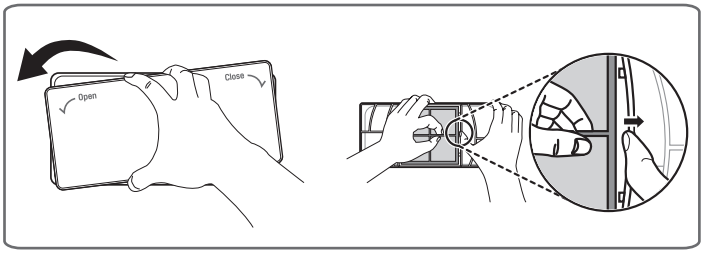

2. Install a new air filter.

Place the new filter inside of the cover with the side that says “Front” facing outward. Turn the filter cover to the right to attach it to the refrigerator wall.

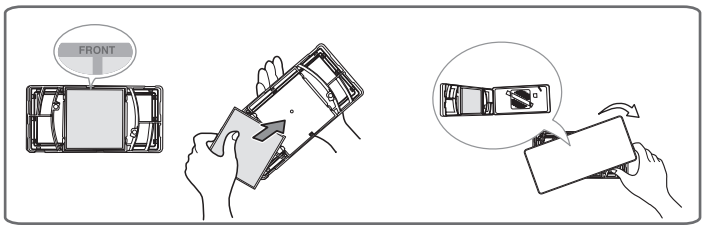

After changing the filter, press and hold the Air Filter Reset button for 3 seconds to reset the filter sensor.

NOTE: To purchase a replacement air filter, visit a Sears store or call 1-844-553-6667.
You may also purchase online at www.kenmore.com

FREEZER SECTION

EXTRA ICE BIN

1. Pull the Freezer Drawer and the Pullout Drawer out as far as possible to remove the Extra Ice Bin.
2. Gently lift and pull out the ice bin.
3. To replace, pull both drawers out as far as possible, and set the bin in its correct position in the Pullout Drawer. Close the Pullout Drawer and then the Freezer Drawer.

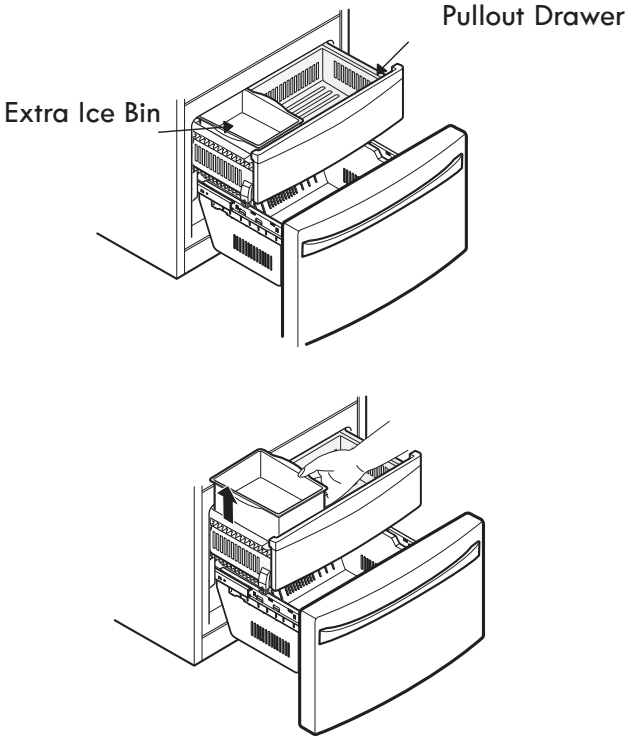

⚠ **CAUTION:** Pinch hazard! Keep hands and feet clear of the bottom of the freezer drawer when opening and closing.

PULLOUT DRAWER

1. To remove, pull the drawer out to full extension. Lift the front of the drawer up, then pull it straight out.

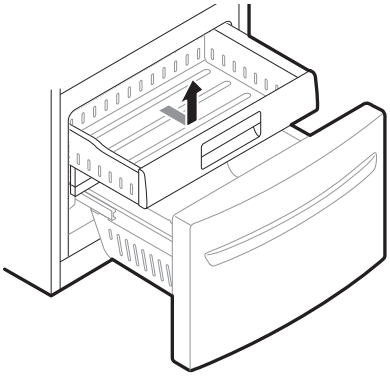

2. To replace, slightly tilt up the drawer front, insert the drawer into the frame, and push the drawer back into place.

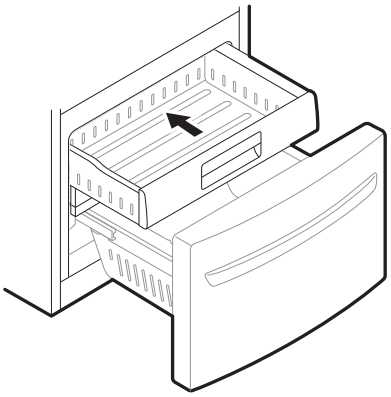

DURABASE

1. To remove the Durabase, push it to the back as much as possible. Tilt up the front of the Durabase and pull straight out.
2. To replace, insert the Durabase in rail assembly.

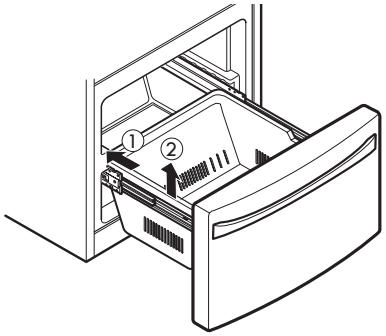

DURABASE DIVIDER

The Durabase divider allows you to organize the Durabase area into sections. It can be adjusted from side to side to accommodate items of different sizes.

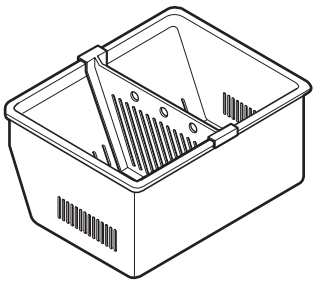

⚠ **WARNING:** If the Durabase divider is removed, there is enough open space for children or pets to crawl inside.
To prevent accidental child and pet entrapment or suffocation risk, DO NOT allow children or pets to touch or go near the drawer.

WATER FILTER

Replace the water filter:

- Approximately every 6 months.
- When the water filter indicator turns on.
- When the water dispenser output decreases.
- When the ice cubes are smaller than normal.

1. Remove the old water filter.

- Lower or remove the top left shelf to allow the water filter to rotate all the way down.
- Pinch the sides to open the water filter cover.

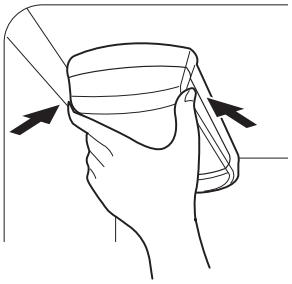

- Pull the water filter downward and turn it counterclockwise before pulling it out.
- Make sure to rotate the filter down completely before pulling it out of the manifold hole.

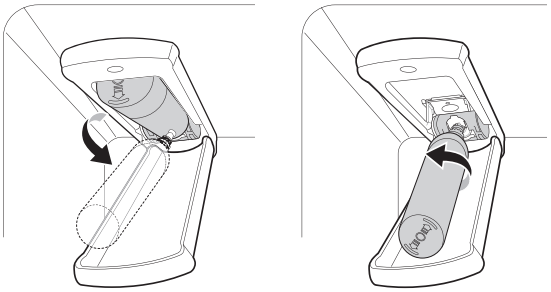

NOTE: Replacing the water filter causes a small amount of water (around 1 oz. or 25 cc) to drain. Wrap a cloth around the front end of the water filter cover to collect any leaking water. Hold the water filter upright, once it is removed, to prevent any remaining water from spilling out of the water filter.

2. Replace with a new water filter.

- Take the new water filter out of its packing and remove the protective cover from the o-rings. With the water filter tabs in the horizontal position, push the new water filter into the manifold hole and turn it clockwise until it stops.

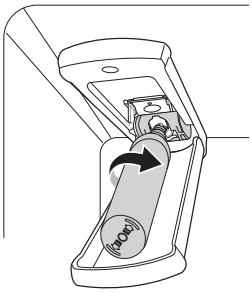

- Close the water filter cover. The cover will click when closed correctly.

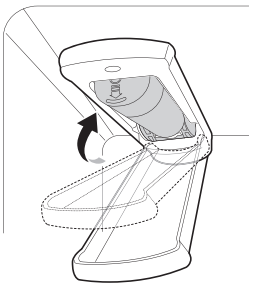

3. After the water filter is replaced, dispense 2.5 gallons of water (flush for approximately 5 minutes) to remove trapped air and contaminants from the system. Do not dispense the entire 2.5 gallon amount continuously. Depress and release the dispenser pad for cycles of 30 seconds ON and 60 seconds OFF.

4. Press and hold the Water Filter Reset button for 3 seconds to reset the indicator light.

⚠ **CAUTION:** Operating the refrigerator with a water filter is recommended. However, no bypass filter plug is necessary if there is no water filter installed.

NOTE: To purchase a replacement filter, visit your local Sears store, or call 1-844-553-6667.
You may also purchase online at www.kenmore.com

Performance Data Sheet

Use Replacement Cartridge: ADQ74793502

The concentration of the indicated substances in water entering the system was reduced to a concentration less than or equal to the permissible limit for water leaving the system as specified in NSF/ANSI Standard 42 and Standard 53.

System tested and certified by NSF International against NSF/ANSI Standard 42, Standard 53 and Standard 401 for the reduction of substances listed below.

Contaminant Reduction	Average Influent Challenge	NSF Specified Challenge Concentration	Avg % Reduction	Average Product Water Concentration	Max Permissible Product Water Concentration	NSF Reduction Requirements
Chlorine Taste and Odor	2.0 µg/L	2.0 mg/L ± 10%	>97.5%	0.050 µg/L	N/A	≥ 50.00%
Nominal Particulate Class I, , ≥0.5 to < 1.0 µm	12,000,000 pts/mL	At least 10,000 particles/mL	99.8%	24,000 pts/ml	N/A	≥85.00%
Asbestos	180 MFL	10^7 to 10^8 MFL; fibers greater than 10 µm in length	>99.00%	< 1 MFL	N/A	≥99.00%
Atrazine	8.5 µg/L	9.0 µg/L ± 10%	>94.10%	0.500 µg/L	3.0 µg/L	N/A
Benzene	15.0 µg/L	15.0 µg/L± 10%	>96.60%	0.510 µg/L	5.0 µg/L	N/A
Carbofuran	74.0 µg/L	80.0 µg/L± 10%	98.30%	1.258 µg/L	40 µg/L	N/A
Lindane	1.9 µg/L	2.0 µg/L± 10%	>99.00%	0.019 µg/L	0.2 µg/L	N/A
P-Dichlorobenzene	230.0 µg/L	225.0 µg/L± 10%	>99.80%	0.460 µg/L	75.0 µg/L	N/A
2,4-D	210.0 µg/L	210.0 µg/L± 10%	>99.90%	0.210 µg/L	70.0 µg/L	N/A
Lead @ pH 6.5	140.0 µg/L	150.0 µg/L± 10%	99.60%	0.560 µg/L	10.0 µg/L	N/A
Lead @ pH 8.5	150.0 µg/L	150.0 µg/L± 10%	>90%	<0.500 µg/L	10.0 µg/L	N/A
Mercury @ pH 6.5	5.9 µg/L	6.0 µg/L± 10%	91.00%	0.531 µg/L	2.0 µg/L	N/A
Mercury @ pH 8.5	5.6 µg/L	6.0 µg/L± 10%	92.50%	<0.420 µg/L	2.0 µg/L	N/A
Cyst*	100,000 cysts/L	Minimum 50,000 cysts/L	99.99%	10	N/A	≥99.95%
Atenolol	240 ng/L	200 ± 40% ng/L	> 95.50%	10.80 ng/L	30 ng/L	N/A
Carbamazepine	1600 ng/L	1400 ± 40% ng/L	98.40%	25.60 ng/L	200 ng/L	N/A
DEET	1600 ng/L	1400 ± 40% ng/L	97.10%	46.40 ng/L	200 ng/L	N/A
Trimethoprim	170 ng/L	140 ± 40% ng/L	>96.80%	5.44 ng/L	20 ng/L	N/A
Linuron	160 ng/L	140 ± 40% ng/L	>96.60%	5.44 ng/L	20 ng/L	N/A
Phenytoin	200 ng/L	200 ± 40% ng/L	>94.80%	10.40 ng/L	30 ng/L	N/A
Ibuprofen	400 ng/L	400 ± 40% ng/L	>94.50%	22.00 ng/L	60 ng/L	N/A
Naproxen	140 ng/L	140 ± 40% ng/L	>96.10%	5.46 ng/L	20 ng/L	N/A
Estrone	120 ng/L	140 ± 40% ng/L	>96.10%	4.68 ng/L	20 ng/L	N/A
Bisphenol A	2000 ng/L	2000 ± 40% ng/L	>98.90%	22.00 ng/L	300 ng/L	N/A
Nonyl Phenol	1600 ng/L	1400 ± 40% ng/L	>97.10%	46.40 ng/L	200 ng/L	N/A

* Based on the use of Cryptosporidium parvum oocysts

Application Guidelines/Water Supply Parameters	
Service Flow	0.5 gpm (1.9 lpm)
Water Supply	Potable Water
Water Pressure	20-120 psi (138 - 827 kPa)
Water Temperature	33°F - 100°F (0.6°C - 38°C)
Capacity	200 gallons (757 liters)

It is essential that the manufacturer's recommended installation, maintenance and water filter replacement requirements be carried out for the product to perform as advertised.

NOTE: While the testing was performed under standard laboratory conditions, actual performance may vary.

To purchase a replacement filter, visit your local Sears store, or call 1-844-553-6667.
You may also purchase online at www.kenmore.com

Product distributed in the United States by Transform SR Brands Management LLC, Hoffman Estates, IL 60179 U.S.A.

3M is a trademark of 3M Company.
NSF is a trademark of NSF International.
© 2009 3M Company. All rights reserved.

⚠WARNING

To reduce the risk associated with ingestion of contaminants: Do not use with water that is microbiologically unsafe or of unknown quality without adequate disinfection before and after of the system. Systems certified for cyst reduction may be used on disinfected water that may contain filterable cysts. EPA Establishment Number 10350-MN-005

⚠CAUTION

To reduce the risk associated with property damage due to water leakage:

- **Read and follow** the Water Filter instructions before installation and use of this system.
- Installation and use **MUST** comply with all state and local plumbing codes.
- **Do not** install if water pressure exceeds 120 psi (827 kPa). Contact a plumbing professional if you are uncertain of how to check your water pressure.
- **Do not** install where water hammer conditions may occur. If water hammer conditions exist, you must install a water hammer arrester. Contact a plumbing professional if you are uncertain of how to check for this condition.
- **Do not** install on hot water supply lines. The maximum operating water temperature of this water filter system is 100°F (38°C).
- **Protect water filter from freezing.** Do no operate refrigerator in ambient conditions below 55°F. Drain water filter when storing unit in temperatures below 40°F (4.4°C).
- The disposable water filter must be replaced every six months, at the rated capacity, or if a noticeable reduction in flow rate occurs.

State of California
Department of Public Health

Water Treatment Device Certificate Number 09 - 2019

Date Issued: December 15, 2009

Manufacturer: Sears Roebuck and Co.

The water treatment device(s) listed on this certificate have met the testing requirements pursuant to Section 116830 of the Health and Safety Code for the following health related contaminants:

Microbiological Contaminants and Turbidity

Cysts

Inorganic/Radiological Contaminants

Asbestos
Lead
Mercury

Organic Contaminants

2,4-D Reduction
Atrazine
Benzene
Carbofuran
Lindane
p-Dichlorobenzene
Toxaphene

Rated Service Capacity: 200 gal

Rated Service Flow: 0.5 gpm

Conditions of Certification:

CARE AND CLEANING

⚠WARNING



Explosion Hazard

Use non-flammable cleaner. Failure to do so can result in fire, explosion, or death.

Both the refrigerator and freezer sections defrost automatically; however, clean both sections about once a month to prevent odors. Wipe up spills immediately.

GENERAL CLEANING TIPS

- Unplug the refrigerator or disconnect power.
- Remove all removable parts, such as shelves, crispers, etc. Refer to the sections in Using Your Refrigerator for removal instructions.
- Use a clean sponge or soft cloth and a mild detergent in warm water. Do not use abrasive or harsh cleaners.
- Hand wash, rinse and dry all surfaces thoroughly.
- Plug in the refrigerator or reconnect power.

OUTSIDE

Waxing external painted metal surfaces helps provide rust protection. Do not wax plastic parts. Wax painted metal surfaces at least twice a year using appliance wax (or auto paste wax). Apply wax with a clean, soft cloth.

For products with black stainless steel exterior, spray glass cleaner on a clean, microfiber cloth and rub in direction of grain. Do not spray glass cleaner directly at the display panel. Do not use harsh or abrasive cleaners.

For products with a standard stainless steel exterior, use a damp microfiber cloth and rub in the direction of the grain. Dry with a paper towel to avoid streaks. For stubborn stains and fingerprints, use a few drops of liquid dish soap in water, and rinse with hot water before drying. Do not use abrasive or harsh cleaners.

INSIDE WALLS

(Allow freezer to warm up so the cloth will not stick)

To help remove odors, you can wash the inside of the refrigerator with a mixture of baking soda and warm water. Mix 2 tablespoons of baking soda to 1 quart of water (26 g soda to 1 liter water.) Be sure the baking soda is completely dissolved so it does not scratch the surfaces of the refrigerator.

⚠**CAUTION:** While cleaning the inside, do not spray water.

DOOR LINERS AND GASKETS

Use a clean sponge or soft cloth and a mild detergent in warm water. Do not use cleaning waxes, concentrated detergents, bleaches, or cleaners containing petroleum on plastic refrigerator parts.

PLASTIC PARTS (COVERS AND PANELS)

Use a clean sponge or soft cloth and a mild detergent in warm water. Do not use window sprays, abrasive cleansers, or flammable fluids. These can scratch or damage the material.

CONDENSER COILS

Use a vacuum cleaner with an attachment to clean the condenser cover and vents. Do not remove the panel covering the condenser coil area.

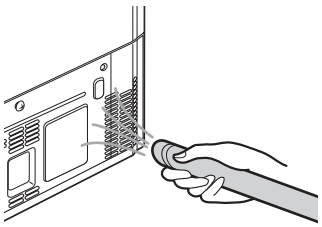

LED LIGHT REPLACEMENT

⚠WARNING

Electrical Shock Hazard

Before service is performed on the interior LED lighting, unplug the refrigerator or turn off power at the circuit breaker or fuse box.

Setting either or both controls to the OFF position does not remove power to the light circuit.

NOTE: The refrigerator and freezer compartment lights are LED interior lighting, and service should be performed by a qualified technician.

POWER INTERRUPTIONS

1. If the power will be out for 24 hours or less, keep all refrigerator doors closed to help foods stay cold and frozen.
2. If the power will be out for more than 24 hours, remove all frozen food and store it in a frozen food locker.

WHEN YOU GO ON VACATION

If you choose to leave the refrigerator on while you are away, follow these steps to prepare your refrigerator before you leave.

1. Use up any perishables and freeze other items.
2. Turn off the icemaker and empty the ice bin.

If you choose to turn the refrigerator off before you leave, follow these steps.

1. Remove all food from the refrigerator.
2. Depending on your model, set the thermostat control (refrigerator control) to OFF. See the **Setting the Controls** section.
3. Clean the refrigerator, wipe it and dry well.
4. Tape rubber or wood blocks to the tops of both doors to prop them open far enough for air to get in. This stops odor and mold from building up.

WHEN YOU MOVE

When you are moving your refrigerator to a new home, follow these steps to prepare it for the move.

1. Remove all food from the refrigerator and pack all frozen food in dry ice.
2. Unplug the refrigerator.
3. Clean, wipe and dry thoroughly.
4. Take out all removable parts, wrap them well and tape them together so they do not shift and rattle during the move. Refer to the **Using your Refrigerator** section for removal instructions.
5. Depending on the model, raise the front of the refrigerator so it rolls more easily OR screw in the leveling legs all the way so they do not scrape the floor. See the **Door Closing** section.
6. Tape the doors shut and tape the power cord to the refrigerator cabinet.

When you get to your new home, put everything back and refer to the **Refrigerator Installation** section for preparation instructions.

CONNECTING THE WATER LINE

BEFORE YOU BEGIN

This water line installation is not covered by the refrigerator warranty. Follow these instructions carefully to minimize the risk of expensive water damage.

Water hammer (water banging in the pipes) in house plumbing can cause damage to refrigerator parts and can lead to water leakage or flooding. Call a qualified plumber to correct water hammer before installing the water supply line to the refrigerator.

⚠ **CAUTION:** To prevent burns and product damage, only connect the refrigerator water line to a cold water supply. Connect to a potable water supply only.

If you use your refrigerator before connecting the water line, make sure the icemaker power switch is in the **OFF (O)** position.

⚠ **CAUTION:** To avoid property damage, do not install the icemaker tubing in areas where temperatures fall below freezing.

WATER PRESSURE

The water pressure must be between 20 and 120 psi on models without a water filter and between 40 and 120 psi on models with a water filter.

If a **reverse osmosis water filtration system** is connected to your cold water supply, this water line installation is not covered by the refrigerator warranty. Follow these instructions carefully to minimize the risk of expensive water damage.

If a **reverse osmosis water filtration system** is connected to your cold water supply, the water pressure to the reverse osmosis system needs to be a minimum of 40 to 60 psi (2.8 kgf/cm^2 ~ 4.2 kgf/cm^2, less than 2.0~3.0 sec. to fill a cup of 7 oz capacity).

If the water pressure from the reverse osmosis system is less than 21 psi or 1.5 kgf/cm2 (takes more than 4.0 sec to fill a cup of 7 oz capacity):

- Check to see if the sediment filter in the reverse osmosis system is blocked. Replace the filter if necessary.
- Allow the storage tank on the reverse osmosis system to refill after heavy usage.
- If the issue concerning water pressure from reverse osmosis remains, call a licensed, qualified plumber.
- All installations must be in accordance with local plumbing code requirements.

⚠ **CAUTION:** Wear eye protection during installation to prevent injury.

WHAT YOU WILL NEED

- **Copper Tubing,** ¼ in. outer diameter, to connect the refrigerator to the water supply. Be sure both ends of the tubing are cut square.

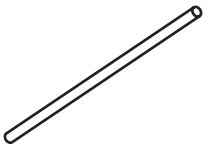

- To determine how much tubing you need: measure the distance from the water valve on the back of the refrigerator to the water supply pipe. Then, add 8 feet (2.4 m). Be sure there is sufficient extra tubing (about 8 feet [2.4 m] coiled into 3 turns of about 10 in. [25 cm] diameter) to allow the refrigerator to move out from the wall after installation.
- **Power drill.**
- **½ in. or adjustable wrench.**
- **Flat blade and Phillips head screwdrivers.**
- **Two ¼ in. outer diameter compression nuts and 2 ferrules (sleeves)** to connect the copper tubing to the shutoff valve and the refrigerator water valve.

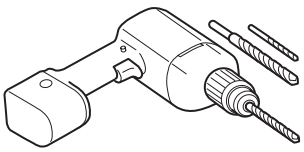

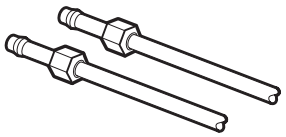

- If your existing copper water line has a flared fitting at the end, you will need an **adapter** (available at plumbing supply stores) to connect the water line to the refrigerator OR you can cut off the flared fitting with a tube cutter and then use a compression fitting.

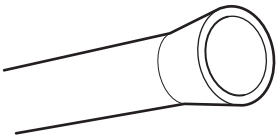

- **Shutoff valve to connect to the cold water line.** The shutoff valve should have a water inlet with a minimum inside diameter of $5/32$ in. at the point of connection to the COLD WATER LINE. Saddle-type shutoff valves are included in many water supply kits. Before purchasing, make sure a saddle-type valve complies with your local plumbing codes.

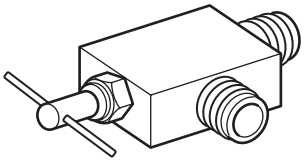

NOTE: A self-piercing saddle type water valve should not be used.

⚠ WARNING

Electrical Shock Hazard

When using any electrical device (such as a power drill) during installation, be sure the device is battery powered, double insulated or grounded in a manner that will prevent the hazard of electric shock.

INSTALLATION INSTRUCTIONS

Install the shutoff valve on the nearest frequently used drinking water line.

1. SHUT OFF THE MAIN WATER SUPPLY

Turn on the nearest faucet to relieve the pressure on the line.

2. CHOOSE THE VALVE LOCATION

Choose a location for the valve that is easily accessible. It is best to connect into the side of a vertical water pipe. When it is necessary to connect into a horizontal water pipe, make the connection to the top or side, rather than at the bottom, to avoid drawing off any sediment from the water pipe.

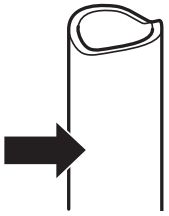

3. DRILL THE HOLE FOR THE VALVE

Drill a ¼ in. hole in the water pipe using a sharp bit. Remove any burrs resulting from drilling the hole in the pipe. Be careful not to allow water to drain into the drill. Failure to drill a ¼ in. hole may result in reduced ice production or smaller cubes.

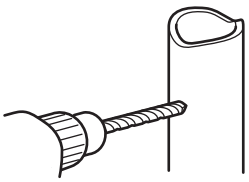

NOTE: The hookup line cannot be white, plastic tubing. Licensed plumbers must use only copper tubing (NDA tubing #49595 or #49599) or Cross Link Polyethylene (PEX) tubing.

4. FASTEN THE SHUTOFF VALVE

Fasten the shutoff valve to the cold water pipe with the pipe clamp.

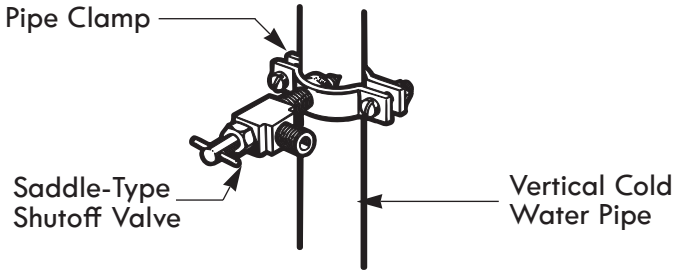

NOTE: Commonwealth of Massachusetts Plumbing Codes 248CMR shall be adhered to. Saddle valves are illegal, and their use is not permitted in Massachusetts. Consult with a licensed plumber.

5. TIGHTEN THE PIPE CLAMP

Tighten the clamp screws until the sealing washer begins to swell.

NOTE: Do not overtighten the clamp or you may crush the tubing.

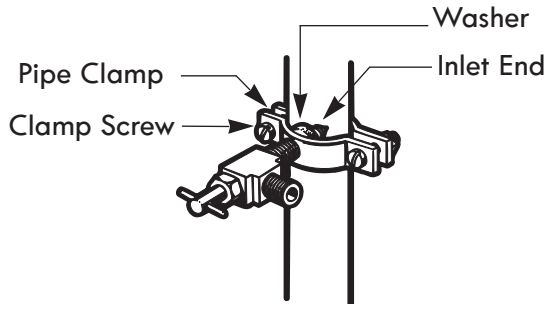

6. ROUTE THE TUBING

Route the tubing between the cold water line and the refrigerator.

Route the tubing through a hole drilled in the wall or floor (behind the refrigerator or adjacent base cabinet) as close to the wall as possible.

NOTE: Be sure there is sufficient extra tubing (about 8 feet coiled into 3 turns of about 10 in. diameter) to allow the refrigerator to move out from the wall after installation.

***7.* CONNECT THE TUBING TO THE VALVE**

Place the compression nut and ferrule (sleeve) for the copper tubing onto the end of the tubing and connect it to the shutoff valve. Make sure the tubing is fully inserted into the valve. Tighten the compression nut securely.

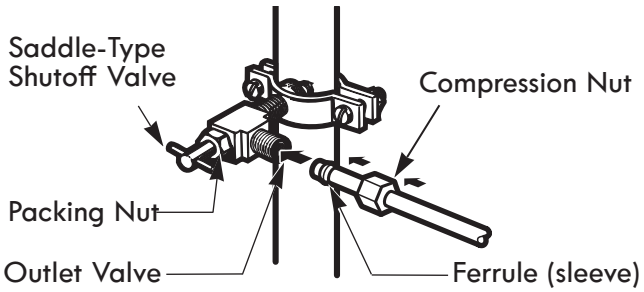

NOTE: Commonwealth of Massachusetts Plumbing Codes 248CMR shall be adhered to. Saddle valves are illegal, and their use is not permitted in Massachusetts. Consult with a licensed plumber.

8. FLUSH OUT THE TUBING

Turn the main water supply on and flush out the tubing until the water is clear.

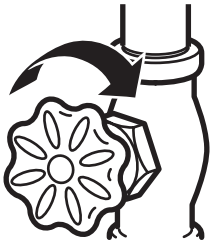

Shut the water off at the water valve after about one quart of water has been flushed through the tubing.

9. CONNECT THE TUBING TO THE REFRIGERATOR

NOTE: Before making the connection to the refrigerator, be sure that the refrigerator power cord is not plugged into the wall outlet.

1. Remove the plastic flexible cap from the water valve.

2. Place the compression nut and ferrule (sleeve) onto the end of the tubing as shown.

3. Insert the end of the copper tubing into the connection as far as possible. While holding the tubing, tighten the fitting.

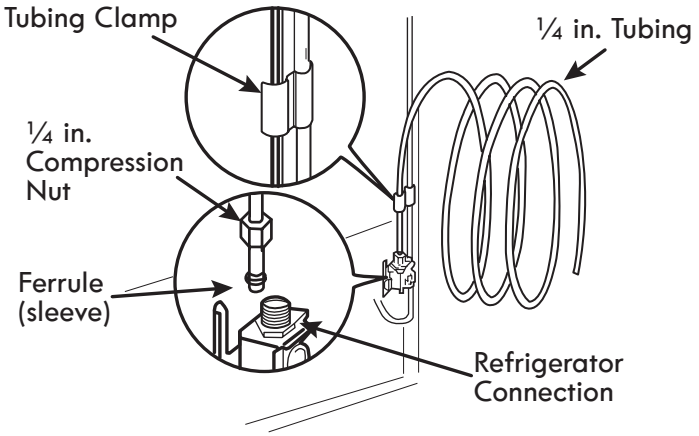

10. TURN THE WATER ON AT THE SHUTOFF VALVE

Tighten any connections that leak.

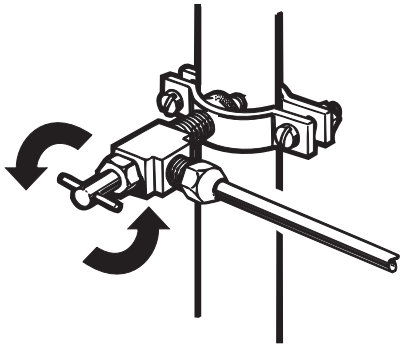

⚠**CAUTION:** Check to see if leaks occur at the water line connections.

11. PLUG IN THE REFRIGERATOR

Arrange the coil of tubing so that it does not vibrate against the back of the refrigerator or against the wall. Push the refrigerator back to the wall.

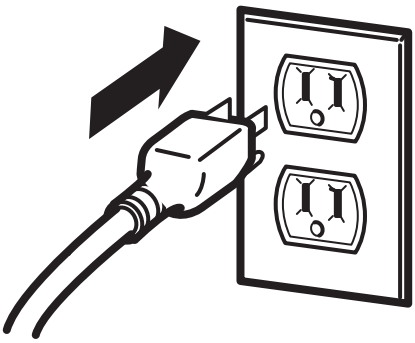

12. START THE ICEMAKER

Set the icemaker power switch to the **ON** position.

The icemaker will not begin to operate until it reaches its operating temperature of 15°F (–9°C) or below. It will then begin operation automatically if the icemaker power switch is in the **ON (I)** position.

TROUBLESHOOTING GUIDE

FAQS (FREQUENTLY ASKED QUESTIONS)

Q: What are the best temperature settings for my refrigerator and freezer?

A: The default setting for the refrigerator is 37° Fahrenheit (3° Celsius). The default setting for the freezer is 0° Fahrenheit (-18° Celsius). Adjust these settings as necessary to keep food at desired temperatures. Milk should be cold when stored on the inner shelf of the refrigerator. Ice cream should be firm and ice cubes should not melt in the freezer. To switch the display from Fahrenheit to Celsius, press and hold the Freezer and Refrigerator buttons until you hear a beep and the settings in the display change.

Q: How do I set the refrigerator and freezer temperatures?

A: Continually press the Refrigerator or Freezer button on the control panel until the desired temperature appears. The numbers will cycle from highest to lowest and then return to the highest again with continuous pressing.

Q: Why do I hear a buzzing noise from my refrigerator periodically?

A: This may happen if you do not have a water source attached to your refrigerator and the icemaker is turned on. If you do not have a water source attached to the back of the refrigerator you should turn the icemaker off.

Q: Why does the icemaker tray look crooked?

A: This is a normal part of the icemaker cycle. The icemaker tray may appear level or with a slight tilt. The change in position is to assist in the freezing process.

Q: My refrigerator is powered on and the controls are working, but it's not cooling and the display shows "OFF" (see below). What is wrong?

A: The refrigerator is in Demo Mode. The Demo Mode disables all cooling in the refrigerator and freezer sections to conserve energy while on display in a retail store. When activated, OFF is displayed on the control panel and the display remains on for 20 seconds. With either refrigerator door opened, press and hold the Refrigerator Temp button and press the Accela Ice button 3 times. The control panel beeps and the temperature settings display to confirm that Demo Mode is deactivated. Use the same procedure to activate Demo Mode.



Before conducting troubleshooting, make sure that the following basic requirements are met:

Service Flow	0.5 gpm (1.9 lpm)
Water Supply	Potable Water
Water Pressure	20-120 psi (138-827 kPa)
Operating Ambient Temperature Limits	55°F–110°F (12.8°C–43.3°C)
Electrical Ratings	115 V, 60 Hz, AC only, and fused at 15 or 20 amperes

TROUBLESHOOTING GUIDE

COOLING

Problem	Possible Cause & Solution
Refrigerator and freezer section are not cooling.	**The refrigerator control is set to OFF (some models).** • Firmly plug the cord into a live outlet with proper voltage (see Electrical & Grounding Requirements).
	Refrigerator is in the defrost cycle. • During the defrost cycle, the temperature of each compartment may rise slightly. Wait 30 minutes and confirm the proper temperature has been restored once the defrost cycle has completed.
	Refrigerator was recently installed. • It may take up to 24 hours for each compartment to reach the desired temperature.
	Refrigerator was recently relocated. • If the refrigerator was stored for a long period of time or moved on its side, it is necessary for the refrigerator to stand upright for 24 hours before connecting it to power.
	The refrigerator is in Demo Mode. • The **Demo Mode** allows the lights and control display to work normally while disabling the cooling system to save energy while on the showroom floor. To disable **Demo Mode**, open one door, then press and hold the **Accela Ice** and **Refrigerator Temp.** buttons for five seconds. Once disabled, OFF will disappear and the previous temperature settings will be displayed. (Refer to **Setting the Controls** for recommended temperatures).
Cooling system runs too much.	**Refrigerator is replacing an older model.** • Modern refrigerators require more operating time but use less energy due to more efficient technology.
	Refrigerator was recently plugged in or power restored. • The refrigerator will take up to 24 hours to cool completely.
	The door is opened often or a large amount of food / hot food was added. • Adding food and opening the door warms the refrigerator, requiring the compressor to run longer in order to cool the refrigerator back down. In order to conserve energy, try to get everything you need out of the refrigerator at once, keep food organized so it is easy to find, and close the door as soon as the food is removed. (Refer to the Food Storage Guide.)
	Doors are not closed completely. • Firmly push the doors shut. If they will not shut all the way, the “Doors will not close correctly or pop open” section in Troubleshooting.
	Refrigerator is installed in a hot location. • The compressor will run longer under warm conditions. At normal room temperatures (70 °F or 21 °C) expect your compressor to run about 40% to 80% of the time. Under warmer conditions, expect it to run even more often. The refrigerator should not be operated above 110 °F (43 °C).
	Condenser / back cover is clogged. • Use a vacuum cleaner with an attachment to clean the condenser cover and vents. Do not remove the panel covering the condenser coil area.

COOLING

Problem	Possible Cause & Solution
Interior moisture buildup	**Doors are opened often or for long periods of time.** • When the doors are opened often or for long periods of time, warm, humid air enters the compartment. This raises the temperature and moisture level within the compartment. To lessen the effect, reduce the frequency and duration of door openings.
	Doors are not closed correctly. • See the "Doors will not close correctly or pop open" section.
	Weather is humid. • Humid weather allows additional moisture to enter the compartments when the doors are opened leading to condensation or frost. Maintaining a reasonable level of humidity in the home will help to control the amount of moisture that can enter the compartments.
	Defrost cycle recently completed. • During the defrost cycle, the temperature of each compartment may rise slightly and condensation may form on the back wall. Wait 30 minutes and confirm that the proper temperature has been restored once the defrost cycle has completed.
	Food is not packaged correctly. • Food stored uncovered or unwrapped, and damp containers can lead to moisture accumulation within each compartment. Wipe all containers dry and store food in sealed packaging to prevent condensation and frost.
Food is freezing in the refrigerator compartment	**Food with high water content was placed near an air vent.** • Rearrange items with high water content away from air vents.
	Refrigerator temperature control is set incorrectly. • If the temperature is too cold, adjust the control one increment at a time and wait for the temperature to stabilize. Refer to the Control Panel section for more information.
	Refrigerator is installed in a cold location. • When the refrigerator is operated in temperature below 41 °F (5 °C), food can freeze in the refrigerator compartment. The refrigerator should not be operated in temperature below 55 °F (13 °C).
Refrigerator or freezer section is too cold.	**Incorrect temperature control settings.** • If the temperature is too cold, adjust the control one increment at a time and wait for the temperature to stabilize. Refer to the Control Panel for more information.
Frost or ice crystals form on frozen food (inside of sealed package).	**Condensation from food with a high water content has frozen inside of the food package.** • This is normal for food items with a high water content.
	Food has been left in the freezer for a long period of time. • Do not store food items with high water content in the freezer for a long period of time.
Frost or ice crystals form on frozen food (outside of package).	**Door is opened frequently or for long periods of time.** • When the doors are opened often or for long periods of time, warm, humid air enters the compartment. This raises the temperature and moisture level within the compartment. Increased moisture will lead to frost and condensation. To lessen the effect, reduce the frequency and duration of door openings.
	Door is not closing properly. • Refer to the "Doors will not close correctly or pop open" section in Troubleshooting.

TROUBLESHOOTING GUIDE

COOLING

Problem	Possible Cause & Solution
Refrigerator or freezer section is too warm.	**Refrigerator was recently installed.** • It may take up to 24 hours for each compartment to reach the desired temperature.
	The air vents are blocked. Cold air circulates from the freezer to the fresh food section and back again through air vents in the wall dividing the two sections. • Locate air vents by using your hand to sense airflow and move all packages that block vents and restrict airflow. Rearrange items to allow air to flow throughout the compartment.
	Doors are opened often or for long periods of time. • When the doors are opened often or for long periods of time, warm, humid air enters the compartment. This raises the temperature and moisture level within the compartment. To lessen the effect, reduce the frequency and duration of door openings.
	Unit is installed in a hot location. • The refrigerator should not be operated in temperatures above 110 °F (43 °C).
	A large amount of food or hot food was added to either compartment. • Adding food warms the compartment requiring the cooling system to run. Allowing hot food to cool to room temperature before putting it in the refrigerator will reduce this effect.
	Doors are not closed correctly. • See the “Doors will not close correctly or pop open” section in the Troubleshooting.
	Temperature control is not set correctly. • If the temperature is too warm, adjust the control one increment at a time and wait for the temperature to stabilize.
	Defrost cycle has recently completed. • During the defrost cycle, the temperature of each compartment may rise slightly and condensation may form on the back wall. Wait 30 minutes and confirm the proper temperature has been restored once the defrost cycle has completed.

ICE & WATER

Problem	Possible Cause & Solution
The icemaker is not making any ice. **The icemaker is not making enough ice.**	**Refrigerator was recently installed or icemaker recently connected.** • It may take up to 24 hours for each compartment to reach the desired temperature and for the icemaker to begin making ice.
	Icemaker is not turned on. • Locate the icemaker ON/OFF and confirm that it is turned on.
	The ice detecting sensor is obstructed. • Foreign substances or frost on the ice-detecting sensor can interrupt ice production. Make sure that the sensor area is clean at all times for proper operation.
	The refrigerator is not connected to a water supply or the supply shutoff valve is not turned on. • Connect the refrigerator to the water supply and turn the water shutoff valve fully open.
	Icemaker shutoff (arm or sensor) obstructed. • If your icemaker is equipped with an ice shutoff arm, make sure that the arm moves freely. If your icemaker is equipped with the electronic ice shutoff sensor, make sure that there is a clear path between the two sensors.
	Reverse osmosis water filtration system is connected to your cold water supply. • Reverse osmosis filtration systems can reduce the water pressure below the minimum amount and result in icemaker issues. (Refer to the Connecting the Water Line section.).
	Demand exceeds ice storage capacity. • The icemaker will produce approximately 70-184 cubes in a 24 hour period.
	Water filter has been exhausted. • Replacing the water filter is recommended: Approximately every six months. When the water filter indicator turns on. When the water dispenser output decreases. When the ice cubes are smaller than normal.
	Low house water supply pressure. • The water pressure must be between 20 and 120 psi on models without a water filter and between 40 and 120 psi on models with a water filter. If the problem persists, it may be necessary to contact a plumber.
	Tubing connecting refrigerator to house supply valve is kinked. • The tubing can kink when the refrigerator is moved during installation or cleaning resulting in reduced water flow. Straighten or repair the water supply line and arrange it to prevent future kinks.
	Doors are opened often or for long periods of time. • If the doors of the unit are opened often, ambient air will warm the refrigerator which will prevent the unit from maintaining the set temperature. Lowering the refrigerator temperature can help, as well as not opening the doors as frequently.
	Doors are not closed completely. • If the doors are not properly closed, ice production will be affected. See the “Doors will not close correctly or pop open” section in Parts & Features Troubleshooting for more information.
	The temperature setting for the freezer is too warm. • The recommended temperature for the freezer compartment for normal ice production is 0°F. If the freezer temperature is warmer, ice production will be affected.

TROUBLESHOOTING GUIDE

ICE & WATER

Problem	Possible Cause & Solution
Ice has bad taste or odor.	**Water supply contains minerals such as sulfur.** • A water filter may need to be installed to eliminate taste and odor problems. **NOTE:** In some cases, a filter may not help. It may not be possible to remove all minerals/ odor/taste in all water supplies.
	Icemaker was recently installed. • Ice that has been stored for too long will shrink, become cloudy, and may develop a stale taste. Throw away old ice and make a new supply.
	The food has not been stored properly in either compartment. • Rewrap the food. Odors may migrate to the ice if food is not wrapped properly.
	The interior of the refrigerator needs to be cleaned. • See the Care & Cleaning section for more information.
	The ice storage bin needs to be cleaned. • Empty and wash the bin (discard old cubes). Make sure that the bin is completely dry before reinstalling it.
Icemaker is making too much ice.	**Icemaker shutoff (arm/ sensor) is obstructed.** • Empty the ice bin. If your icemaker is equipped with an ice shutoff arm, make sure that the arm moves freely. If your icemaker is equipped with an electronic ice shutoff sensor, make sure that there is a clear path between the two sensors. Reinstall the ice bin and wait 24 hours to confirm proper operation.
Ice is not dispensing.	**Cannot hear the sound of ice dispensing.** • In the control panel, select the modes for cubed ice and crushed ice alternately to dispense the ice.
	Doors are not closed completely. • Ice will not dispense if any of the refrigerator doors are left open.
	Infrequent use of the dispenser. • Infrequent use of the ice dispenser will cause the cubes to stick together over time, which will prevent them from properly dispensing. Check the ice bin for ice cubes clumping/ sticking together. If they are, break up the ice cubes to allow for proper operation.
	The delivery chute is clogged with frost or ice fragments. • Eliminate the frost or ice fragments by removing the ice bin and clearing the chute with a plastic utensil. Dispensing cubed ice can also help prevent frost or ice fragment buildup.
	The dispenser display is locked. • Press and hold the Lock button for three seconds to unlock the control panel and dispenser.
	Ice bin is empty. • It may take up to 24 hours for each compartment to reach the desired temperature and for the icemaker to begin making ice. Make sure that the shutoff (arm/sensor) is not obstructed. Once the ice supply in the bin has been completely exhausted, it may take up to 90 minutes before additional ice is available, and approximately 24 hours to completely refill the bin.

ICE & WATER

Problem	Possible Cause & Solution
Water is not dispensing.	**New installation or water line recently connected.** • Dispense 2.5 gallons of water (flush for approximately 5 minutes) to remove trapped air and contaminants from the system. Do not dispense the entire 2.5 gallon amount continuously. Depress and release the dispenser pad for cycles of 30 seconds ON and 60 seconds OFF.
	The dispenser panel is locked. • Press and hold the Lock button for three seconds to unlock the control panel and dispenser.
	The dispenser is not set for water dispensing. • The dispenser can be set for ice or water. Make certain that the control panel is set for the proper operation. Press the Water button on the control panel to dispense water.
	Refrigerator or freezer doors are not closed properly. • Water will not dispense if any of the refrigerator doors are left open.
	Water filter has been recently removed or replaced. • After the water filter is replaced, dispense 2.5 gallons of water (flush for approximately five minutes) to remove trapped air and contaminants from the system. Do not dispense the entire 2.5 gallon amount continuously. Depress and release the dispenser pad for cycles of 30 seconds ON and 60 seconds OFF.
	Tubing connecting refrigerator to house supply valve is kinked. • The tubing can kink when the refrigerator is moved during installation or cleaning. Resulting in reduced water flow. Straighten or repair the water supply line and arrange it to prevent future kinks.
	The house water supply is not connected, the valve is not turned on fully, or the valve is clogged. • Connect the refrigerator to the water supply and turn the water shutoff valve fully open. If the problem persists, it may be necessary to contact a plumber.
Water is dispensing slowly.	**Water filter has been exhausted.** • Replacing the water filter is recommended: Approximately every six months. When the water filter indicator turns on. When the water dispenser output decreases. When the ice cubes are smaller than normal.
	Reverse osmosis filtration system is used. • Reverse osmosis filtration systems can reduce the water pressure below the minimum amount and result in icemaker issues. If the problem persists, it may be necessary to contact a plumber.
	Low house water supply pressure. • The water pressure must be between 20 and 120 psi on models without a water filter and between 40 and 120 psi on models with a water filter. If the problem persists, it may be necessary to contact a plumber.
Dispenser is dispensing warm water.	**Refrigerator was recently installed.** • Allow 24 hours after installation for the water storage tank to cool completely.
	The water dispenser has been used recently and the storage tank was exhausted. • Depending on your specific model, the water storage capacity will range from approximately 20 to 30 oz.
	Dispenser has not been used for several hours. • If the dispenser has not been used for several hours, the first glass dispensed may be warm. Discard the first 10oz.
	Refrigerator is connected to the hot water supply. • Make sure that the refrigerator is connected to a cold water pipe. **WARNING:** Connecting the refrigerator to a hot water line may damage the icemaker.

TROUBLESHOOTING GUIDE

ICE & WATER

Problem	Possible Cause & Solution
Water has bad taste or odor.	**Water supply contains minerals such as sulfur.** • A water filter may need to be installed to eliminate taste and odor problems.
	Water filter has been exhausted. • Replacing the water filter is recommended: Approximately every six months. When the water filter indicator turns on. When the water dispenser output decreases. When the ice cubes are smaller than normal.
	Refrigerator was recently installed. • Dispense 2.5 gallons of water (flush for approximately 5 minutes) to remove trapped air and contaminants from the system. Do not dispense the entire 2.5 gallon amount continuously. Depress and release the dispenser pad for cycles of 30 seconds ON and 60 seconds OFF.

PARTS & FEATURES

Problem	Possible Cause & Solution
Doors will not close correctly or pop open.	**Food packages are blocking the door open.** • Rearrange food containers to clear the door and door shelves.
	Ice bin, crisper cover, pans, shelves, door bins, or baskets are out of position. • Push bins all the way in and put crisper cover, pans, shelves and baskets into their correct positions. See the Operation section for more information.
	The doors were removed during product installation and not properly replaced. • Remove and replace the doors according to the Removing and Replacing Refrigerator Handles and Doors section.
	Refrigerator is not leveled properly. • See Door Alignment in the Refrigeration Installation section to level refrigerator.
Doors are difficult to open.	**The gaskets are dirty or sticky.** • Clean the gaskets and the surfaces that they touch. Rub a thin coat of appliance polish or kitchen wax on the gaskets after cleaning.
	Door was recently closed. • When you open the door, warmer air enters the refrigerator. As the warm air cools, it can create a vacuum. If the door is hard to open, wait one minute to allow the air pressure to equalize, then see if it opens more easily.
Refrigerator wobbles or seems unstable.	**Leveling legs are not adjusted properly.** • Refer to the Leveling and Door Alignment section.
	Floor is not level. • It may be necessary to add shims under the leveling legs or rollers to complete installation.
Lights do not work.	**LED interior lighting failure.** • The refrigerator compartment lamp is LED interior lighting, and service should be performed by a qualified technician.
Refrigerator has an unusual odor.	**The Air Filter may need to be set to the MAX setting or replaced.** • Set the Air Filter to the MAX setting. If the odor does not go away within 24 hours, the filter may need to be replaced. See the Replacing the Air Filter section for replacement instructions.
The interior of the refrigerator is covered with dust or soot	**The refrigerator is located near a fire source, such as a fireplace, chimney, or candle.** • Make sure that the refrigerator is not located near a fire source, such as a fireplace, chimney or candle.

NOISES

Problem	Possible Cause & Solution
Clicking	**The defrost control will click when the automatic defrost cycle begins and ends. The thermostat control (or refrigerator control on some models) will also click when cycling on and off. No action needed.**
Rattling	**Rattling noises may come from the flow of refrigerant, the water line on the back of the unit, or items stored on top of or around the refrigerator.**
	Refrigerator is not resting solidly on the floor. • Floor is weak or uneven or leveling legs need to be adjusted. See the Door Alignment section.
	Refrigerator with linear compressor was jarred while running. No action needed.
Whooshing	**This is normal when the evaporator fan motor is circulating air through the refrigerator and freezer compartments.**
	Air is being forced over the condenser by the condenser fan. No action needed.
Gurgling	**Refrigerant is flowing through the cooling system. No action needed.**
Popping	**Contraction and expansion of the inside walls due to changes in temperature is part of normal operation.**
Sizzling	**It is normal to hear water dripping on the defrost heater during a defrost cycle.**
Vibrating	**If the side or back of the refrigerator is touching a cabinet or wall, some of the normal vibration may become audible.** • To eliminate the noise, make sure that the sides and back of the refrigerator are not close enough to contact a wall or cabinet.
Dripping	**It is normal to hear water running into the drain pan during the defrost cycle.**
Pulsating or high-pitched sound	**Your refrigerator is designed to run more efficiently to keep your food items at the desired temperature.** • The high efficiency compressor may cause your new refrigerator to run longer than your old one, but it is still more energy efficient than previous models. While the refrigerator is running, it is normal to hear a pulsating or high-pitched sound.

WI-FI

Problem	Possible Cause & Solution
Trouble connecting appliance and smartphone to Wi-Fi network.	**The password for the Wi-Fi network was entered incorrectly.** • Delete your home Wi-Fi network and begin the registration process again.
	Mobile data for your smartphone is turned on. • Turn off the Mobile data on your smartphone before registering the appliance.
	The wireless network name (SSID) is set incorrectly. • The wireless network name (SSID) should be a combination of English letters and numbers. (Do not use special characters.)
	The router frequency is not 2.4 GHz. • Only a 2.4 GHz router frequency is supported. Set the wireless router to 2.4 GHz and connect the appliance to the wireless router. To check the router frequency, check with your Internet service provider or the router manufacturer.
	The distance between the appliance and the router is too far. • If the appliance is too far from the router, the signal may be weak and the connection may not be configured correctly. Move the router closer to the appliance or purchase and install a Wi-Fi repeater.

Kenmore®

Customer Care Hotline

To schedule in-home repair service
or order replacement parts

Para pedir servicio de reparación
a domicilio, y ordenar piezas

1-844-553-6667

www.kenmore.com

