NEFF
cook. create. inspire.

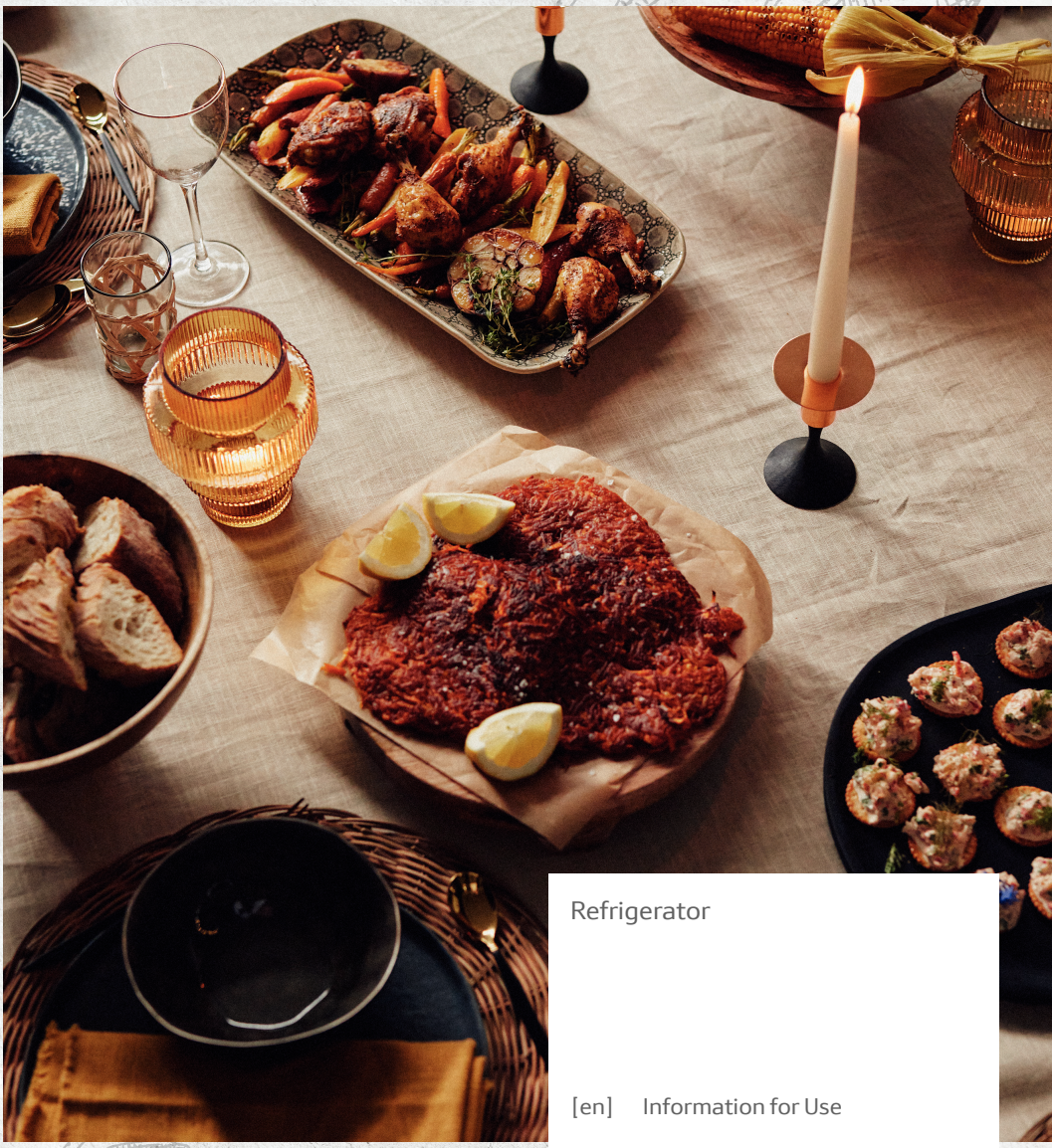

Refrigerator

[en] Information for Use

**KI282..**

## Further information and explanations are available online:



## Table of contents


**1 Safety ..... 4**
1.1 General information ..... 4
1.2 Intended use ..... 4
1.3 Restriction on user group ..... 4
1.4 Safe transport ..... 4
1.5 Safe installation ..... 5
1.6 Safe use ..... 6
1.7 Damaged appliance ..... 8

**2 Preventing material damage ..... 9**

**3 Environmental protection and saving energy ..... 9**
3.1 Disposing of packaging ..... 9
3.2 Saving energy ..... 9

**4 Installation and connection ..... 10**
4.1 Scope of delivery ..... 10
4.2 Criteria for the installation location ..... 10
4.3 Installing the appliance ..... 11
4.4 Preparing the appliance for the first time ..... 11
4.5 Connecting the appliance to the electricity supply ..... 11

**5 Familiarising yourself with your appliance ..... 12**
5.1 Appliance ..... 12
5.2 Control panel ..... 13

**6 Features ..... 13**
6.1 Shelf ..... 13
6.2 Fruit and vegetable container ..... 13
6.3 Door rack ..... 14
6.4 Accessories ..... 14

**7 Basic operation ..... 14**
7.1 Switching on the appliance ..... 14
7.2 Operating tips ..... 14
7.3 Switching off the appliance ..... 14
7.4 Setting the temperature ..... 14

**8 Additional functions ..... 15**
8.1 Super function ..... 15

**9 Alarm ..... 15**
9.1 Door alarm ..... 15

**10 Refrigerator compartment ..... 15**
10.1 Tips for storing food in the refrigerator compartment ..... 15
10.2 Chill zones in the refrigerator compartment ..... 16
10.3 "OK" sticker ..... 16

**11 Freezer compartment ..... 16**
11.1 Freezer compartment door ..... 16
11.2 Freezing capacity ..... 16
11.3 Tips for storing food in the freezer compartment ..... 17
11.4 Tips for freezing fresh food ..... 17
11.5 Shelf life of frozen food at −18 °C ..... 17
11.6 Defrosting methods for frozen food ..... 17

**12 Defrosting ..... 18**
12.1 Defrosting in the refrigerator compartment ..... 18
12.2 Defrosting in the freezer compartment ..... 18

**13 Cleaning and servicing ..... 19**
13.1 Preparing the appliance for cleaning ..... 19

13.2 Cleaning the appliance ..... 19
13.3 Cleaning the condensation channel and drainage hole ... 20
13.4 Removing the fittings..... 20

**14 Troubleshooting..... 22**
14.1 Power failure..... 24
14.2 Conducting an appliance self-test ..... 24

**15 Storage and disposal..... 24**
15.1 Taking the appliance out of operation ..... 24
15.2 Disposing of old appliance ... 25

**16 Customer Service..... 25**
16.1 Product number (E-Nr.) and production number (FD)..... 25

**17 Technical data ..... 26**

# 1 Safety

Observe the following safety instructions.

## 1.1 General information

- Read this instruction manual carefully.
- Keep the instruction manual and the product information safe for future reference or for the next owner.
- Do not connect the appliance if it has been damaged in transit.

## 1.2 Intended use

This appliance is only intended to be fully fitted in a kitchen.
Only use this appliance:

- for chilling and freezing food and for making ice cubes.
- in private households and in enclosed spaces in a domestic environment.
- Up to an altitude of 2000 m above sea level.

## 1.3 Restriction on user group

This appliance may be used by children aged 8 or over and by people who have reduced physical, sensory or mental abilities or inadequate experience and/or knowledge, provided that they are supervised or have been instructed on how to use the appliance safely and have understood the resulting dangers.
Do not let children play with the appliance.
Cleaning and user maintenance must not be performed by children unless they are being supervised.
Children above the age of three years old and younger than eight years old may load and unload the the fridge-freezer.

## 1.4 Safe transport

**⚠ WARNING – Risk of injury!**
The high weight of the appliance may result in injury when lifted.
▸ Do not lift the appliance on your own.

## 1.5 Safe installation

**⚠ WARNING – Risk of electric shock!**

Incorrect installation is dangerous.

- ▸ Connect and operate the appliance only in accordance with the specifications on the rating plate.
- ▸ Never equip the appliance with an external switching device, e.g. a timer or remote control.
- ▸ When the appliance is installed, the mains plug of the power cord must be freely accessible. If free access is not possible, an isolating switch must be integrated into the permanent electrical installation according to the installation regulations.
- ▸ When installing the appliance, check that the power cable is not trapped or damaged.

If the insulation of the power cord is damaged, this is dangerous.

- ▸ Never let the power cord come into contact with heat sources.

**⚠ WARNING – Risk of explosion!**

If the appliance's ventilation openings are closed off, a leak in the refrigeration circuit may result in a flammable mixture of gas and air.

- ▸ Keep ventilation openings in the appliance casing or in the integrated casing clear of obstruction.

**⚠ WARNING – Risk of fire!**

It is dangerous to use an extended power cord and non-approved adapters.

- ▸ Do not use extension cables or multiple socket strips.
- ▸ Only use adapters and power cords approved by the manufacturer.
- ▸ If the power cord is too short and a longer one is not available, please contact an electrician to have the domestic installation adapted.

Portable multiple socket strips or portable power supply units may overheat and cause a fire.

- ▸ Do not place portable multiple socket strips or power supply units on the back of the appliance.

## 1.6 Safe use

**⚠ WARNING – Risk of electric shock!**
An ingress of moisture can cause an electric shock.
- ▸ Only use the appliance in enclosed spaces.
- ▸ Never expose the appliance to intense heat or humidity.
- ▸ Do not use steam- or high-pressure cleaners to clean the appliance.

**⚠ WARNING – Risk of suffocation!**
Children may put packaging material over their heads or wrap themselves up in it and suffocate.
- ▸ Keep packaging material away from children.
- ▸ Do not let children play with packaging material.

Children may breathe in or swallow small parts, causing them to suffocate.
- ▸ Keep small parts away from children.
- ▸ Do not let children play with small parts.

**⚠ WARNING – Risk of explosion!**
If the cooling circuit is damaged, flammable refrigerant may escape and explode.
- ▸ To accelerate the defrosting process, do not use any other mechanical devices or means other than those recommended by the manufacturer.
- ▸ If food is stuck to the freezer compartment, loosen it with a blunt implement such as the handle of a wooden spoon.

Products which contain flammable propellants and explosive substances may explode, e.g. spray cans.
- ▸ Do not store products which contain flammable propellants (e.g. spray cans) or explosive substances in the appliance.

**⚠ WARNING – Risk of fire!**
Electrical devices within the appliance may cause a fire, e.g. heaters or electric ice makers.
- ▸ Do not operate electrical devices within the appliance.

### ⚠ WARNING – Risk of injury!

Containers that contain carbonated drinks may burst.

- ▸ Do not store containers that contain carbonated drinks in the freezer compartment.

Injury to the eyes caused by escaping flammable refrigerant and hazardous gases.

- ▸ Do not damage the tubes of the refrigerant circuit or the insulation.

### ⚠ WARNING – Risk of cold burns!

Contact with frozen food and cold surfaces may cause burns by refrigeration.

- ▸ Never put frozen food straight from the freezer compartment into your mouth.
- ▸ Avoid prolonged contact of the skin with frozen food, ice and surfaces in the freezer compartment.

### ⚠ CAUTION – Risk of harm to health!

To prevent food from being contaminated, you must observe the following instructions.

- ▸ If the door is open for an extended period of time, this may lead to a considerable temperature increase in the compartments of the appliance.
- ▸ Regularly clean the surfaces that may come into contact with food and accessible drain systems.
- ▸ Store raw meat and fish in suitable containers in the refrigerator so that they do not touch or drip on other food.
- ▸ If the fridge/freezer is empty for an extended period of time, switch off the appliance, defrost it, clean it and leave the door open to prevent the formation of mould.

Metal or metal-style parts in the appliance may contain aluminium. If acidic food comes into contact with aluminium in the appliance, aluminium foil ions may pass into the food.

- ▸ Do not consume soiled food.

## 1.7 Damaged appliance

**⚠ WARNING – Risk of electric shock!**

If the appliance or the power cord is damaged, this is dangerous.

- ▸ Never operate a damaged appliance.
- ▸ Never pull on the power cord to unplug the appliance. Always unplug the appliance at the mains.
- ▸ If the appliance or the power cord is damaged, immediately unplug the power cord or switch off the fuse in the fuse box.
- ▸ Call customer services. → *Page 25*

Improper repairs are dangerous.

- ▸ Repairs to the appliance should only be carried out by trained specialist staff.
- ▸ Only use genuine spare parts when repairing the appliance.
- ▸ If the power cord or the appliance power cable of this appliance is damaged, it must be replaced with a special power cord or special appliance power cable, which is available from the manufacturer or its Customer Service.

**⚠ WARNING – Risk of fire!**



If the tubes are damaged, flammable refrigerant and harmful gases may escape and ignite.

- ▸ Keep naked flames and ignition sources away from the appliance.
- ▸ Ventilate the room.
- ▸ Switch off the appliance. → *Page 14*
- ▸ Unplug the mains plug from the mains or switch off the circuit breaker in the fuse box.
- ▸ Call customer service. → *Page 25*

# 2 Preventing material damage

**ATTENTION!**
Using the base, runners or appliance doors as a seat surface or climbing surface may damage the appliance.
- ▸ Do not stand or support yourself on the base, runners or doors.

Contamination with oil or fat may cause plastic parts and door seals to become porous.
- ▸ Keep plastic parts and door seals free of oil and grease.

Metal or metal-style parts in the appliance may contain aluminium. When aluminium comes into contact with acidic foods, it corrodes and discolours.
- ▸ Only store packaged food in the appliance.

If you clean fittings and accessories in the dishwasher, this may cause them to become deformed or discolour.
- ▸ Never clean fittings and accessory in the dishwasher.

# 3 Environmental protection and saving energy

## 3.1 Disposing of packaging

The packaging materials are environmentally compatible and can be recycled.
- ▸ Sort the individual components by type and dispose of them separately.

## 3.2 Saving energy

If you follow these instructions, your appliance will use less power.

### Selecting the installation location

- Keep the appliance out of direct sunlight.
- Install the appliance as far away as possible from heating elements, cookers and other heat sources:
  - Maintain a 30 mm clearance to electric or gas cookers.
  - Maintain a 300 mm clearance to oil or solid-fuel cookers.
- Never cover or block the external ventilation openings.

### Saving energy during use

**Note:** The arrangement of the fittings does not affect the energy consumption of the appliance.

- Open the appliance only briefly and then close it carefully.
- Never cover or block the interior ventilation openings or the exterior ventilation openings.
- Transport purchased food in a cool bag and place in the appliance quickly.
- Allow warm food and drinks to cool down before storing them.
- Thaw frozen food in the refrigerator compartment to utilise the low temperature of the food.
- Always leave some space between the food and to the back panel.
- Defrost the freezer compartment regularly.
- Open the freezer compartment door only briefly and then close it properly.

# 4 Installation and connection

## 4.1 Scope of delivery

After unpacking all parts, check for any transport damage and for completeness of delivery.
If you have any complaints, contact your dealer or our after-sales service → *Page 25*.

The delivery consists of the following:
- Built-in appliance
- Equipment and accessories[1]
- Installation material
- Installation instructions
- User manual
- Customer service directory
- Warranty enclosure[2]
- Energy label
- Information on energy consumption and noises

## 4.2 Criteria for the installation location

**⚠ WARNING**
**Risk of explosion!**
If the appliance is in a space that is too small, a leak in the refrigeration circuit may result in a flammable mixture of gas and air.
- ▸ Only install the appliance in a space with a volume of at least 1 $m^3$ per 8 g refrigerant. The volume of refrigerant is indicated on the rating plate. → *"Appliance", Fig.* **1**/4, *Page 12*

The weight of the appliance ex works may be up to 60 kg depending on the model.
The subfloor must be sufficiently stable to bear the weight of the appliance.

### Permitted room temperature

The permitted room temperature depends on the appliance's climate class.
The climate class can be found on the rating plate. → *"Appliance", Fig.* **1**/4, *Page 12*

| Climate class | Permitted room temperature |
|---|---|
| SN | 10 °C to 32 °C |
| N | 16 °C to 32 °C |
| ST | 16 °C to 38 °C |
| T | 16 °C to 43 °C |

The appliance is fully functional within the permitted room temperature.
If an appliance with climate class SN is operated at colder room temperatures, the appliance will not be damaged up to a room temperature of 5 °C.

### Niche dimensions

Observe the niche dimensions if you install your appliance in the niche. If this is not the case, problems may occur when installing the appliance.

#### Niche depth

Install the appliance in the recommended niche depth of 560 mm.
If the niche depth is smaller, the energy consumption increases slightly.
The niche depth must be a minimum 550 mm.

[1] Depending on the appliance specifications

[2] Not in all countries

**Niche width**

An inside niche width of at least 560 mm is required for the appliance.

**Over-and-under and side-by-side installation**

If you want to install 2 refrigerating appliances one over the other or side by side, you must maintain a clearance of at least 150 mm between the appliances. Selected appliances can be installed without a minimum clearance. Ask your dealer or kitchen planner about this.

## 4.3 Installing the appliance

- Install the appliance in accordance with the enclosed installation instructions.

## 4.4 Preparing the appliance for the first time

1. Remove the informative material.
2. Remove the protective foil and transit bolts, e.g. remove the adhesive strips and carton.
3. Clean the appliance for the first time. → *Page 19*

## 4.5 Connecting the appliance to the electricity supply

1. Insert the non-heating appliance plug of the power cable into the appliance.
2. Insert the mains plug of the appliance's power cable in a socket nearby.

   The connection data of the appliance can be found on the rating plate. → *"Appliance", Fig.* **1**/4, *Page 12*
3. Check the mains plug is inserted properly.

✔ The appliance is now ready for use.

# 5 Familiarising yourself with your appliance

## 5.1 Appliance

You can find an overview of the parts of your appliance here.

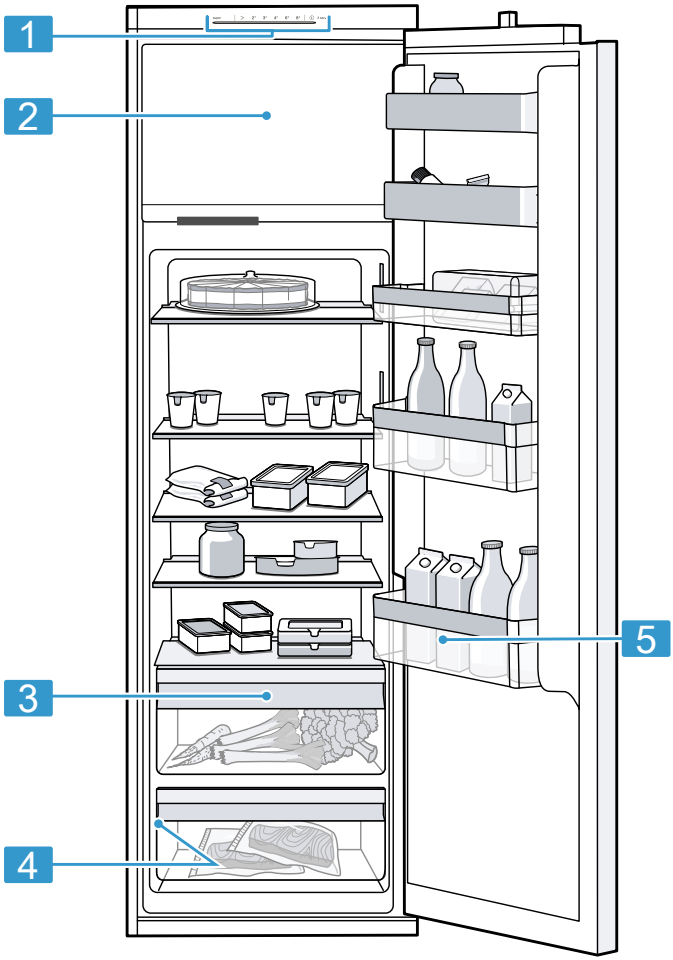


**1**

| | |
|---|---|
| 1 | Control panel → *Page 13* |
| 2 | Freezer compartment → *Page 16* |
| 3 | Fruit and vegetable container → *Page 13* |
| 4 | Rating plate → *Page 26* |

| | |
|---|---|
| 5 | Door storage compartment for large bottles → *Page 14* |

**Note:** Deviations between your appliance and the diagrams may differ with regard to their features and size.

## 5.2 Control panel

You can use the control panel to configure all functions of your appliance and to obtain information about the operating status.

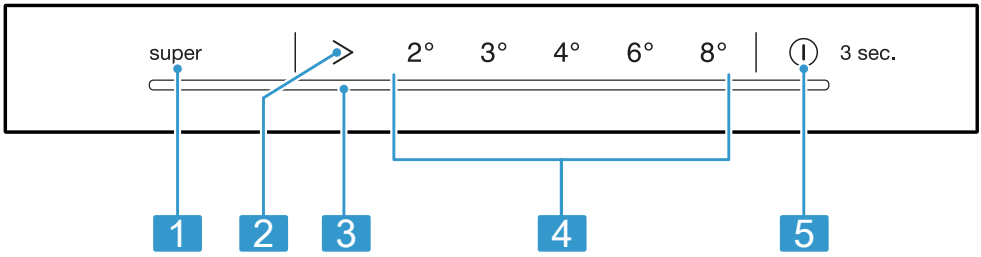


**2**

| | |
|---|---|
| 1 | super switches the Super function on or off. |
| 2 | > sets the temperature of the refrigerator compartment. |
| 3 | > lights up when the alarm is switched on. |
| 4 | Displays the set temperature for the refrigerator compartment in °C. |
| 5 | ⏻ 3 sec. switches the appliance on or off. |

# 6 Features

The features of your appliance depend on the model.

## 6.1 Shelf

To vary the shelf as required, you can remove the shelf and re-insert it elsewhere.
→ *"Removing the shelf", Page 20*

## 6.2 Fruit and vegetable container

Store fresh fruit and vegetables in their packaging in the fruit and vegetable container.
Cover any chopped fruit and vegetables, or store in air-tight packaging.

Condensation may form in the fruit and vegetable container depending on the food and quantity stored. Remove the condensation with a dry cloth.
To ensure that the quality and aroma are retained, store fruit and vegetables that are sensitive to cold outside of the appliance at temperatures of approx. 8 °C to 12 °C, e.g. pineapple, bananas, citrus fruits, cucumbers, courgettes, peppers, tomatoes and potatoes.

## 6.3 Door rack

To adjust the door rack as required, you can remove the door rack and re-insert elsewhere.
→ *"Removing door rack", Page 20*

## 6.4 Accessories

Use original accessories. These have been made especially for your appliance.
The accessories for your appliance depend on the model.

**Egg tray**

Store eggs safely on the egg tray.

# 7 Basic operation

## 7.1 Switching on the appliance

1. Electrically connect the appliance.
→ *Page 11*

   **Note:** If the appliance has been previously switched off using the control panel, press and hold ⏻ **3 sec.** for three seconds.

✔ The appliance begins to cool.

2. Set the required temperature.
→ *Page 14*

## 7.2 Operating tips

- Once you have switched on the appliance, the set temperature is only reached after several hours. Do not put any food in the appliance until the set temperature has been reached.
- When you close the door, a vacuum may be created. The door is then difficult to open again. Wait a moment until the vacuum is offset.
- The temperature in the appliance varies due to the following conditions:
  - How often the appliance is opened
  - Load capacity
  - Temperature of newly stored food
  - Ambient temperature
  - Direct sunlight

## 7.3 Switching off the appliance

▸ Press and hold ⏻ **3 sec.** for three seconds.

## 7.4 Setting the temperature

**Setting the refrigerator compartment temperature**

▸ Press > repeatedly until the temperature display shows the required temperature setting.

The recommended temperature in the refrigerator compartment is 4 °C.
→ *""OK" sticker", Page 16*

**Setting the freezer compartment temperature**

▸ In order to set the freezer compartment temperature, change the refrigerator compartment temperature → *Page 14*.

The refrigerator compartment temperature influences freezer compartment temperature. Refrigerator compartment temperatures that are set to warm generate warmer freezer compartment temperatures.

# 8 Additional functions

Find out which additional functions can be used for your appliance.

## 8.1 Super function

With the Super function, the refrigerator compartment and the freezer compartment cool more intensively. Switch on the Super function 4 to 6 hours before placing food weighing 2 kg or more.
In order to utilise the freezing capacity, use the Super function.
→ *"Freezing capacity", Page 16*

**Note:** When the Super function is switched on, increased noise may occur.

### Switching on Super function

- ▸ Press **super**.
- ✔ "super" lights up.

**Note:** After approx. 50 hours, the appliance switches to normal operation.

### Switching off Super function

- ▸ Press **super** repeatedly until the temperature display shows the required temperature.

# 9 Alarm

## 9.1 Door alarm

If the appliance door is open for a while, the door alarm switches on. A warning tone sounds and > lights up.
After 10 minutes, the interior lighting flashes.

### Switching off the door alarm

- ▸ Close the appliance door or press >.
- ✔ The warning tone is switched off.

# 10 Refrigerator compartment

You can keep meat, sausage, fish, dairy products, eggs, prepared meals and pastries in the refrigerator compartment.
The temperature can be set from 2 °C to 8 °C.
The refrigerator compartment can also be used to store highly perishable foods in the short to medium term. The lower the selected temperature, the longer the food remains fresh.

## 10.1 Tips for storing food in the refrigerator compartment

- Only store food when fresh and undamaged.
- Store food covered or in air-tight packaging.
- To avoid impeding the circulation of air and to prevent food from freezing, do not place food so that it has direct contact with the back wall.

- Allow hot food and drinks to cool down first before placing in the appliance.
- Observe the best-before date or use-by date specified by the manufacturer.

## 10.2 Chill zones in the refrigerator compartment

The air circulation in the refrigerator compartment creates different chill zones.

### Coldest zone

The coldest zone is between the arrow stamped on the side and the shelf underneath.

**Tip:** Store highly perishable food such as fish, sausages and meat in the coldest zone.

### Warmest zone

The warmest zone is at the very top of the door.

**Tip:** Store food that does not spoil easily in the warmest zone, e.g. hard cheese and butter. Cheese can then continue to release its aroma and the butter will still be easy to spread.

## 10.3 "OK" sticker

The "OK" sticker lets you check whether the refrigerator compartment reaches the safe temperature ranges of +4 °C or colder recommended for food.
The "OK" sticker is not included with all models.
If the sticker does not indicate "OK", gradually reduce the temperature.
→ *"Setting the refrigerator compartment temperature", Page 14*
Once the appliance is switched on, it may take up to 12 hours until the set temperature is reached.




Correct setting

# 11 Freezer compartment

You can store frozen food, freeze food and make ice cubes in the freezer compartment.
The temperature in the freezer compartment depends on the temperature in the refrigerator compartment.
Long-term storage of food should be at −18 °C or lower.
The freezer compartment can be used to store perishable food long-term. The low temperatures slow down or stop the spoilage.

## 11.1 Freezer compartment door

To ensure that the frozen food that is stored does not thaw and the freezer compartment is not covered in too much ice, always close the freezer compartment door.

## 11.2 Freezing capacity

The freezing capacity indicates the quantity of food that can be frozen right through to the centre within a specific period of time.
Information on freezing capacity can be found on the rating plate. → *"Appliance", Fig.* **1**/4, *Page 12*

### Prerequisites for freezing capacity

1. Approx. 24 hours before placing fresh food in the appliance, switch on Super function.
→ *"Switching on Super function", Page 15*

2. Store larger quantities of fresh food store at the bottom, close to the back panel. This is where food will freeze most quickly.

## 11.3 Tips for storing food in the freezer compartment

- Store food in air-tight packaging.
- Do not bring food which is to be frozen into contact with frozen food.
- Spread out the food over a wide area in the freezer compartment.

## 11.4 Tips for freezing fresh food

- Freeze fresh and undamaged food only.
- Freeze food in portions.
- Cooked food is more suitable than food that can be eaten raw.
- Vegetables: Wash, chop up and blanch before freezing.
- Fruit: Wash, pit and perhaps peel, possibly add sugar or ascorbic acid solution.
- Food that is suitable for freezing includes baked items, fish and seafood, meat, game, poultry, eggs without shells, cheese, butter and quark, ready meals and leftovers.
- Food that is unsuitable for freezing includes lettuce, radishes, eggs in shells, grapes, raw apples and pears, yoghurt, sour cream, crème fraîche and mayonnaise.

### Packing frozen food

If you select suitable packaging material and the correct type of packaging, you can determine the product quality and prevent freezer burn.

1. Place the food in the packaging.
2. Squeeze out the air.
3. Pack food airtight to prevent it from losing flavour and drying out.
4. Label the packaging with the contents and the date of freezing.

## 11.5 Shelf life of frozen food at –18 °C

| Food | Storage time |
|---|---|
| Fish, sausages, prepared meals and baked goods | up to 6 months |
| Poultry, meat | up to 8 months |
| Vegetables, fruit | up to 12 months |

## 11.6 Defrosting methods for frozen food

⚠ **CAUTION**

**Risk of harm to health!**

During the thawing process, bacteria may multiply and spoil the frozen food.

- ▸ Do not refreeze food after it has been defrosted or started to defrost.
- ▸ Refreeze food only after cooking.
- ▸ These items should no longer be stored for the maximum storage period.

- Defrost animal-based food, such as fish, meat, cheese, quark, in the refrigerator compartment.
- Defrost bread at room temperature.
- Prepare food for immediate consumption in the microwave, in the oven, or on the hob.

# 12 Defrosting

## 12.1 Defrosting in the refrigerator compartment

When the appliance is operating, condensation droplets or frost form on the rear panel of the refrigerator compartment due to functional reasons. The back panel in the refrigerator compartment defrosts automatically.

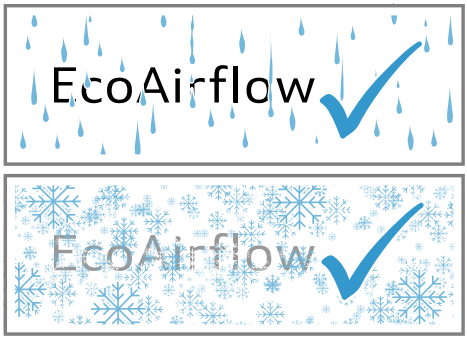


Condensation runs through the condensation channel into the drainage hole to the evaporation pan and does not have to be wiped away.
To ensure that the condensation can drain and odours do not form, observe the following information: Cleaning the condensation channel and drainage hole → *Page 20*.

## 12.2 Defrosting in the freezer compartment

The freezer compartment does not defrost automatically. A layer of hoarfrost in the freezer compartment impairs refrigeration of the frozen food and increases power consumption.

### Defrosting the freezer compartment

Regularly defrost the freezer compartment.

1. Switch on the Super function approx. four hours before defrosting. → *"Switching on Super function", Page 15*

   This means that the food reaches very low temperatures and it can be stored for longer at room temperature.
2. Remove the frozen food and temporarily place it in a cool location. Wrap the frozen food with ice packs, if available, in coverings or newspaper.
3. Switch off the appliance. → *Page 14*
4. Disconnect the appliance from the power supply.

   Unplug the appliance from the mains or switch off the circuit breaker in the fuse box.
5. ⚠ **WARNING - Risk of burns!**
   Hot water, splashes of water and steam can lead to burns.
   ▸ Always fill the pan for the defrosting process with hot, but not boiling, water.

   To accelerate the defrosting process, place a pan of hot, but not boiling, water on a trivet in the freezer compartment.
6. Wipe up the condensation water with a soft cloth or sponge.

7. Rub the freezer compartment dry with a soft, dry cloth.
8. Electrically connect the appliance. → *Page 11*
9. Put the frozen food in the appliance. → *Page 17*

# 13 Cleaning and servicing

To keep your appliance working efficiently for a long time, it is important to clean and maintain it carefully. Customer Service must clean inaccessible points. Cleaning by customer service can give rise to costs.

## 13.1 Preparing the appliance for cleaning

1. Switch off the appliance. → *Page 14*
2. Disconnect the appliance from the power supply.

   Unplug the appliance from the mains or switch off the circuit breaker in the fuse box.
3. Take out all of the food and store it in a cool place.

   Place ice packs (if available) onto the food.
4. If there is a layer of hoarfrost, allow this to defrost.
5. Remove all fittings and accessories from the appliance. → *Page 20*

## 13.2 Cleaning the appliance

**⚠ WARNING**
**Risk of electric shock!**
An ingress of moisture can cause an electric shock.
- ▸ Do not use steam- or high-pressure cleaners to clean the appliance.

Liquid in the lighting or in the controls can be dangerous.
- ▸ The rinsing water must not drip into the lighting or controls.

**ATTENTION!**
Unsuitable cleaning products may damage the surfaces of the appliance.
- ▸ Do not use hard scouring pads or cleaning sponges.
- ▸ Do not use harsh or abrasive detergents.
- ▸ Do not use cleaning products with a high alcohol content.

If liquid gets into the drainage hole, the evaporation pan may overflow.
- ▸ The rinsing water must not get into the drainage hole.

If you clean fittings and accessories in the dishwasher, this may cause them to become deformed or discolour.
- ▸ Never clean fittings and accessory in the dishwasher.

1. Prepare the appliance for cleaning. → *Page 19*
2. Clean the appliance, the fittings, the accessories and the door seals with a dish cloth, lukewarm water and a little pH-neutral washing-up liquid.
3. Dry thoroughly with a soft, dry cloth.
4. Insert the fittings.
5. Electrically connect the appliance. → *Page 11*
6. Putting the food into the appliance.

## 13.3 Cleaning the condensation channel and drainage hole

Regularly clean the condensation channel and drainage hole to ensure that the condensation can drain.

- Carefully clean the condensation channel and the drainage hole, e.g. using a cotton bud.

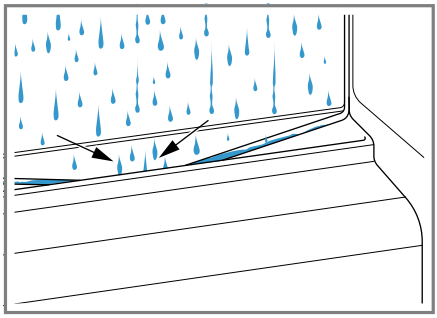

## 13.4 Removing the fittings

If you want to clean the fittings thoroughly, remove these from your appliance.

### Removing the shelf

- Lift the shelf at the front ①, pull it out and remove it ②.

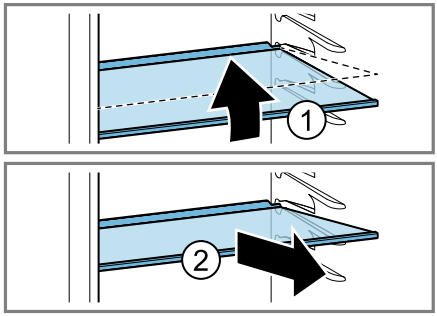


### Removing the freezer compartment shelf

- Pull out the freezer compartment shelf and remove it.

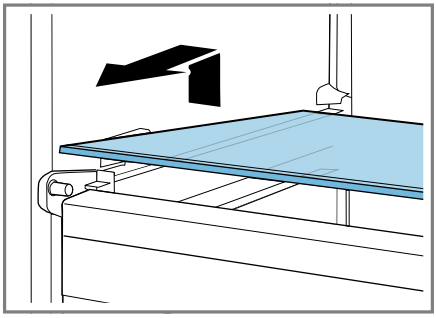

### Removing door rack

- Lift the door rack and remove it.

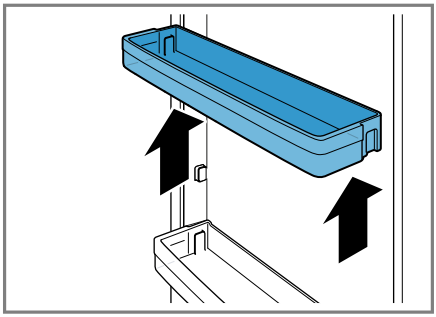

### Removing the fruit and vegetable container

### Removing the front of the container

You can remove the front of the fruit and vegetable container and frozen food container to facilitate cleaning.

- Press in the snap-in hooks on the side of the container ① and remove the front from the container in a turning motion ②.

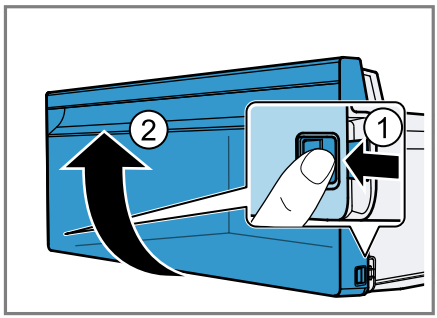

# 14 Troubleshooting

You can rectify minor faults on your appliance yourself. Read the troubleshooting information before contacting after-sales service. This will avoid unnecessary costs.

**⚠ WARNING**
**Risk of electric shock!**
Improper repairs are dangerous.
- ▸ Repairs to the appliance should only be carried out by trained specialist staff.
- ▸ Only use genuine spare parts when repairing the appliance.
- ▸ If the power cord or the appliance power cable of this appliance is damaged, it must be replaced with a special power cord or special appliance power cable, which is available from the manufacturer or its Customer Service.

| Fault | Cause and troubleshooting |
|---|---|
| The appliance is not cooling, the displays and lighting are lit. | Showroom mode is switched on.<br>▸ Carry out the appliance self-test. → *Page 24*<br>✔ Once the appliance self-test has ended, the appliance switches to normal operation. |
| The LED lighting does not work. | Different causes are possible.<br>▸ Call customer service.<br>The customer service number can be found in the enclosed customer service directory. |
| The warning tone sounds.<br>The door alarm is switched on. | The appliance door is open.<br>▸ Close the appliance door. |
| The temperature differs greatly from the setting. | Different causes are possible.<br>1. Switch off the appliance. → *Page 14*<br>2. Switch the appliance back on after five minutes. → *Page 14*<br>– If the temperature is too warm, check the temperature again after a couple of hours.<br>– If the temperature is too cold, check the temperature again on the following day. |
| The base of the refrigerator compartment is wet. | The condensation channel or drainage hole are blocked.<br>▸ Clean the condensation channel and the drainage hole. → *Page 20* |

| Fault | Cause and troubleshooting |
|---|---|
| The appliance hums, bubbles, buzzes, gargles or clicks. | Not a fault. A motor is running, e.g. refrigerating unit, fan. Refrigerant flows through the pipes. The motor, switches or solenoid valves are switching on or off. No action required. |
| The appliance makes noises. | Fittings wobble or stick.<br>▸ Check the removable fittings and, if required, replace these. |
| | Bottles or containers are touching.<br>▸ Move the bottles or containers away from each other. |
| | Super function is switched on.<br>No action required. |

## 14.1 Power failure

During a power failure, the temperature in the appliance rises; this reduces the storage time and the quality of the frozen food.
On the website for your appliance, the technical data provides you with the storage times for frozen food in the event of a fault.

**Notes**

- Open the appliance as little as possible during a power failure and do not place any other food in the appliance.
- Check the quality of the food immediately after a power failure.
  - Dispose of any frozen food that has defrosted and is hotter than 5 °C.
  - Cook or fry slightly thawed frozen food, and then either consume it or freeze it again.

## 14.2 Conducting an appliance self-test

Your appliance has an appliance self-test which displays faults that can be eliminated by your customer service.

1. Switch off the appliance. → *Page 14*
2. Disconnect the appliance from the power supply.

   Unplug the appliance from the mains or switch off the circuit breaker in the fuse box.
3. Electrically reconnect the appliance after 5 minutes. → *Page 11*
4. Within the first 10 seconds after connecting to the power supply, press and hold > for three to five seconds until an audible signal sounds.

✔ The appliance self-test starts when the temperature displays light up in succession.

✔ If, at the end of the appliance self-test, two audible signals sound and the temperature display indicates the set temperature, your appliance is OK. The appliance switches to normal operation.

✔ If, at the end of the appliance self-test, 5 audible signals sound and the temperature display LEDs light up with a different brightness, inform customer service. The LEDs provide customer service with information about this fault.

# 15 Storage and disposal

## 15.1 Taking the appliance out of operation

1. Switch off the appliance. → *Page 14*
2. Disconnect the appliance from the power supply.

   Unplug the appliance from the mains or switch off the circuit breaker in the fuse box.
3. Remove all of the food.
4. Defrost the appliance. → *Page 18*
5. Clean the appliance. → *Page 19*
6. To guarantee the ventilation inside the appliance, leave the appliance open.

## 15.2 Disposing of old appliance

Valuable raw materials can be reused by recycling.

**⚠ WARNING**
**Risk of harm to health!**
Children can lock themselves in the appliance, thereby putting their lives at risk.
- ▸ Leave shelves and containers inside the appliance to prevent children from climbing in.
- ▸ Keep children away from the redundant appliance.

**⚠ WARNING**
**Risk of fire!**
If the tubes are damaged, flammable refrigerant and harmful gases may escape and ignite.
- ▸ Do not damage the tubes of the refrigerant circuit or the insulation.

1. Unplug the appliance from the mains.
2. Cut through the power cord.
3. Dispose of the appliance in an environmentally friendly manner.

   Information about current disposal methods are available from your specialist dealer or local authority.



This appliance is labelled in accordance with European Directive 2012/19/EU concerning used electrical and electronic appliances (waste electrical and electronic equipment - WEEE). The guideline determines the framework for the return and recycling of used appliances as applicable throughout the EU.

# 16 Customer Service

Function-relevant genuine spare parts according to the corresponding Ecodesign Order can be obtained from Customer Service for a period of at least 10 years from the date on which your appliance was placed on the market within the European Economic Area.

**Note:** Under the terms of the manufacturer's warranty applicable to the location, the use of Customer Service is free of charge. The minimum duration of the warranty (manufacturer's warranty for private consumers) in the European Economic Area is 2 years according to the terms of warranty applicable to the location. The terms of warranty do not affect other rights or claims held by yourself under local legislation.

Detailed information on the warranty period and terms of warranty in your country is available from our aftersales service, your retailer or on our website.
If you contact Customer Service, you will require the product number (E-Nr.) and the production number (FD) of your appliance.
The contact details for Customer Service can be found in the enclosed Customer Service directory or on our website.

## 16.1 Product number (E-Nr.) and production number (FD)

You can find the product number (E-Nr.) and the production number (FD) on the appliance's rating plate.
→ *"Appliance", Fig.* **1**/4, *Page 12*

Make a note of your appliance's details and the Customer Service telephone number to find them again quickly.

# 17 Technical data

Refrigerant, cubic capacity and further technical specifications can be found on the rating plate.
→ *"Appliance", Fig.* **1**/4, *Page 12*
This product contains a light source from energy efficiency class E. The light source is available as a spare part and should only be replaced by trained specialist staff.
You can find more information about your model online at https://eprel.ec.europa.eu/[1]. This web address is linked to the official EU EPREL product database. Please then follow the instructions on searching for the model. The model identifier is made up of the characters before the slash in the product number (E-Nr.) on the rating plate. Alternatively, you can also find the model identifier in the first line of the EU energy label.

[1] Only applies to countries in the European Economic Area

**BSH Hausgeräte GmbH**
Carl-Wery-Straße 34
81739 München, GERMANY

Valid within Great Britain:
Imported to Great Britain by
BSH Home Appliances Ltd.
Grand Union House
Old Wolverton Road
Wolverton, Milton Keynes
MK12 5PT
United Kingdom

Register your product online
**neff-home.com**

**9001756084**
en
031024