ESSENTIALS
INSTRUCTION MANUAL

TABLE TOP FRIDGE

CTT50W12



currys

Contents

Safety Warnings **4**

Unpacking **5**

Installation **6**

- Location 6
- Levelling the Unit 6
- Installing the Spacers 6
- Free Space Requirements 6
- Reversing the Door Swing 7
- Cleaning Before Use 10
- Before Using Your Unit 10

Product Overview **11**

- Font View 11
- Rear View 11

Operation **12**

- Switching On Your Unit 12
- Adjusting the Temperature 12
- Noises Inside the Unit! 12
- Tips for Keeping Food in the Unit 12

Cleaning **13**

- Defrosting 13
- Cleaning the Interior and the Exterior of the Unit 13

Maintenance **14**

- Care When Handling / Moving the Unit 14
- Servicing 14
- Switching Off for Long Periods of Time 14
- Condensation 14

Disposal **14**

Specifications **15**

Safety Warnings

For your continued safety and to reduce the risk of injury or electric shock, please follow all the safety precautions listed below.

- Read all instructions carefully before using the unit and keep them for future reference.
- Retain the manual. If you pass the unit onto a third party, make sure to include this manual.
- This appliance is intended for indoor household use and similar applications such as:
  - farm houses and by clients in hotels, motels and other residential type environments;
  - bed and breakfast type environments;
  - catering and similar non-retail applications.
- Ensure that the plug is easily accessible to enable disconnection from the mains supply.
- Keep ventilation openings in the unit enclosure clear of obstructions.
- Do not use mechanical devices or other means to accelerate the defrosting process, other than those recommended by the manufacturer.
- Do not use electrical appliances inside the food storage compartments of the unit, unless they are of the type recommended by the manufacturer.
- If the mains cable is damaged, it must be replaced by the manufacturer, its service agent or a qualified technician in order to avoid a hazard.
- Choose a location for your unit away from heat sources such as radiators or fires as refrigerant and vesicant are burnable.
- Do not damage the refrigerant circuit (The refrigerant is a very environmentally friendly gas but is also combustible. Take care when transporting or moving the unit to ensure that the refrigeration circuit is not damaged. In the event of damage avoid naked flames or ignition sources and ventilate the room in which the unit is placed for a few minutes.)
- The unit must be manoeuvred by a minimum of 2 persons.
- This appliance can be used by children aged from 8 years and above and persons with reduced physical, sensory or mental capabilities or lack of experience and knowledge if they have been given supervision or instruction concerning use of the appliance in a safe way and understand the hazards involved. Children shall not play with the appliance. Cleaning and user maintenance shall not be made by children without supervision.
- Children should be supervised to ensure that they do not play with the unit.
- If your unit is fitted with a lock to prevent children being trapped inside, keep the key out of reach and not in the vicinity of the unit.
- Do not store volatile or flammable substances, such as aerosol cans with a flammable propellant, in the unit.

WARNING



IT IS HAZARDOUS FOR ANYONE OTHER THAN AUTHORISED SERVICE PERSONNEL TO CARRY OUT SERVICING OF REPAIRS WHICH INVOLVE THE REMOVAL OF COVERS.



TO AVOID THE RISK OF AN ELECTRICAL SHOCK DO NOT ATTEMPT REPAIRS YOURSELF.

Thank you for purchasing your new Currys Essentials Fridge.

We recommend that you spend some time reading this instruction manual in order that you fully understand all the operational features it offers.

Read all the safety instructions carefully before use and keep this instruction manual for future reference.

Unpacking

Remove all items from the packaging. Retain the packaging. If you dispose of it please do so according to local regulations.

The following items are included:

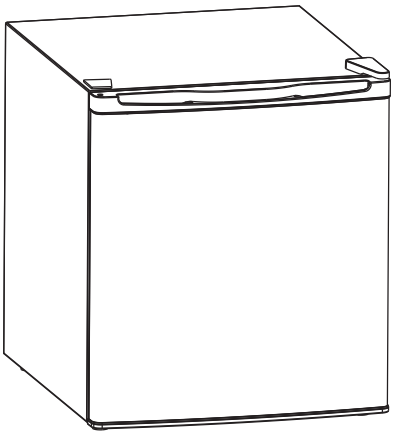

The Main Unit

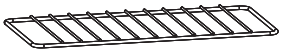

Wire Shelf



Top Wire Rack



Bottom Wire Rack



Instruction Manual

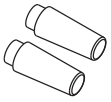

Rear Spacer x 2

If items are missing or damaged please contact Partmaster (UK only). Tel: 0844 800 3456 for assistance.

Location

When selecting a position for your unit you should make sure the floor is flat and firm, and the room is well ventilated with an average room temperature of between 16°C and 38°C. If the room temperature drops below 16°C your freezer may start to defrost. Avoid locating your unit near a heat source, e.g. cooker, boiler or radiator. Also avoid direct sunlight as it may increase the electrical consumption. Extreme cold ambient temperatures may also cause the unit not to perform properly. This unit is not designed for use in a garage or outdoor installation. Do not drape the unit with any covering.

Levelling the Unit

To do this adjust the two levelling feet at the front of the unit. If the unit is not level, the doors and magnetic seal alignments will not be covered properly.

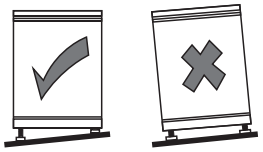

Installing the Spacers

Screw the spacers to the left and right side of the unit's rear part.

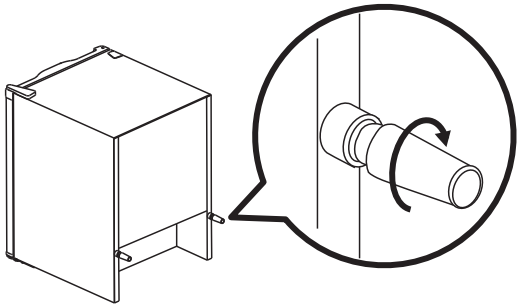

Free Space Requirements

When installing the unit, ensure that 50 mm of free space is left at both sides, 100 mm at the rear of the unit and 90 mm at the top of the unit. The door can be opened to the right or the left, depending on which best suits the location. Please ensure there is adequate space for the door to fully open to 160°.

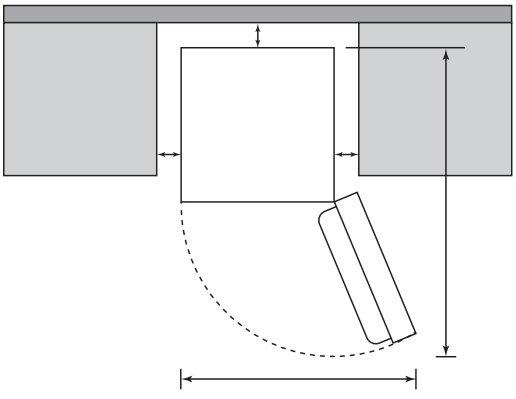

If the appliance is placed under a continuous worktop, the appliance lid (if applicable) may be removed and a ventilation grille of at least 200 cm^2 (available from DIY shops or specialist retailers) should be installed to the worktop above the rear of the appliance to increase ventilation.

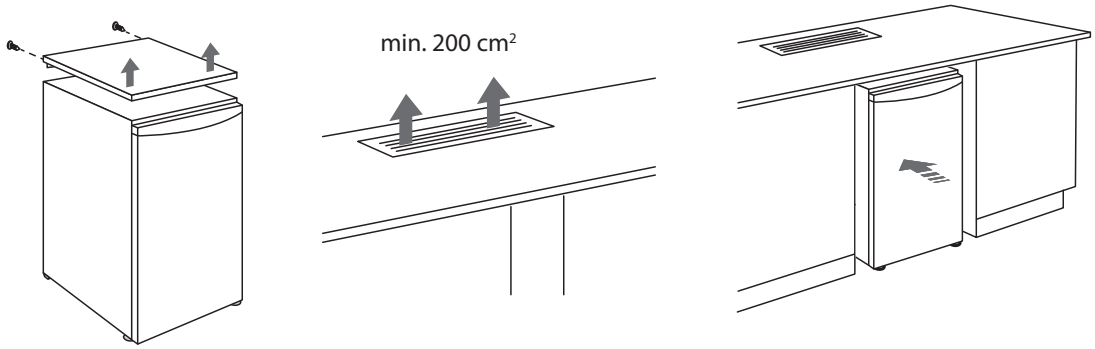

Benefits of increased ventilation:

- Lowered power consumption
- Reduce running costs
- Improved cooling performance
- Prolong product life span

Reversing the Door Swing

Tools required: Phillips style screwdriver / Flat bladed screwdriver / Hexagonal spanner

- Ensure the unit is unplugged and empty.
- To take the door off it is necessary to tilt the unit backwards. You should rest the unit on something solid, e.g. a chair just below the top panel.
- All parts removed must be saved to do the reinstallation of the door.
- Do not lay the unit flat as this may damage the coolant system.
- We recommend that 2 people handle the unit during assembly.
- If you want to have the door swing reversed, we recommend that you contact a qualified technician. You should only try to reverse the door yourself if you believe that you are qualified to do so.

1. Remove the top right hinge cover.

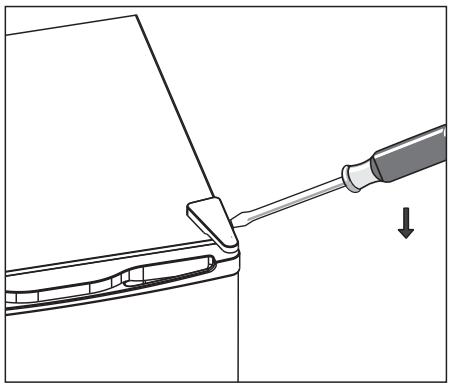

INSTALLATION

2. Undo the screws. Then remove the hinge bracket.

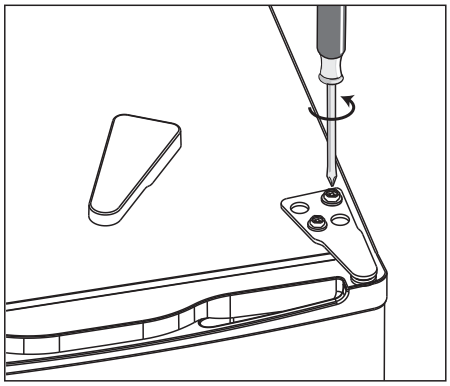

3. Remove the top left screw cover.

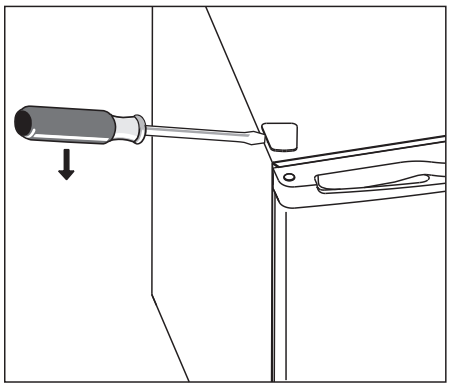

4. Move the core cover from left side to right side. And then lift the door and place it on a padded surface to prevent it from scratching.

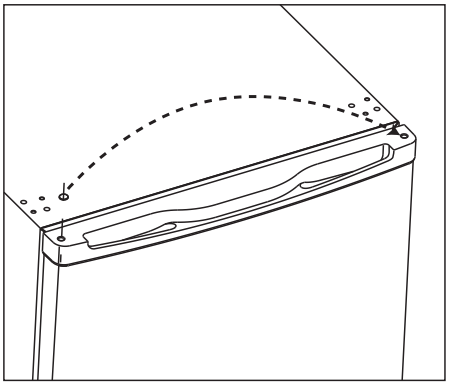

5. Remove the screws and bottom hinge. Then remove the adjustable feet from both side.

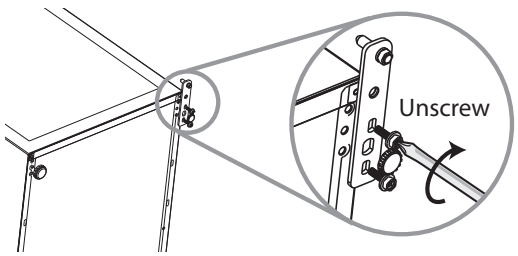

INSTALLATION

6. Unscrew and remove the bottom hinge pin, turn the bracket over and replace it.

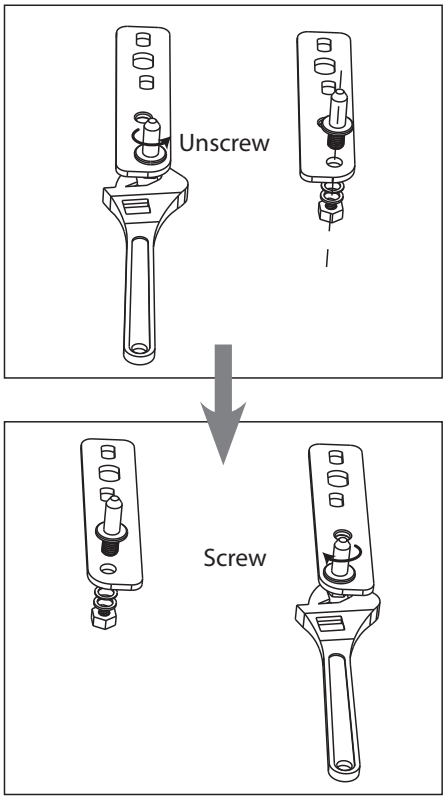

7. Refit the bracket fitting the bottom hinge pin. Replace both adjustable feet.

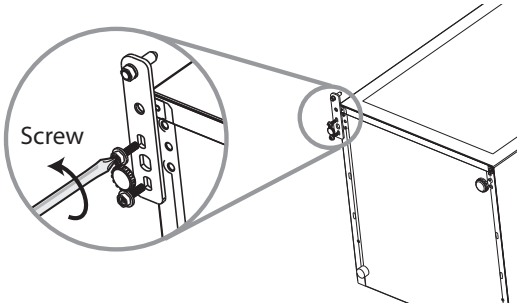

8. Place the door back on. Ensure the door is aligned horizontally and vertically so that the seals are closed on all sides before finally tightening the top hinge.
9. Insert the hinge bracket and screw it to the top of the unit.
10. Use a spanner to tighten it if necessary.

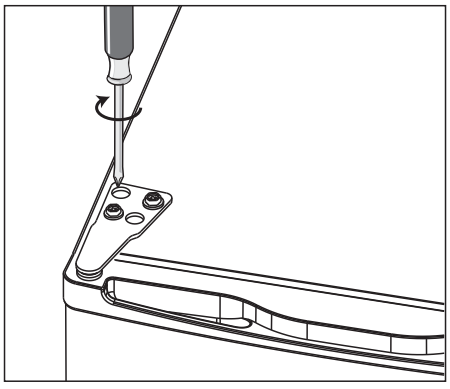

11. Put the hinge cover and the screw cover back.

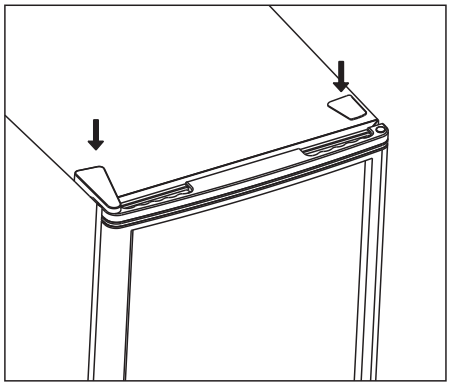

12. With the door closed, check that the door is aligned horizontally and vertically and that the seals are closed on all sides before finally tightening the bottom hinge. Re-adjust the levelling feet as needed.

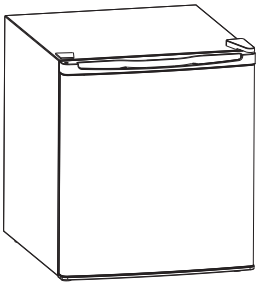

Cleaning Before Use

Wipe the inside of the unit with a weak solution of bicarbonate soda. Then rinse with warm water using a 'wrung-out' sponge or cloth. Wash the shelf in warm soapy water and dry completely before replacing in the unit. Clean the exterior of the unit with a damp cloth.

If you require more information refer to the **Cleaning** section.

- **Before Plugging in YOU MUST**
  Check that you have a socket which is compatible with the plug supplied with the unit.
- **Before Turning On!**
  Do not turn on until two hours after moving the unit. The coolant fluid needs time to settle.

Before Using Your Unit

Before placing any food in your unit, turn it on and wait for 24 hours, to make sure it is working properly and to allow it time to fall to the correct temperature. Your unit should not be overfilled.

Product Overview

Font View

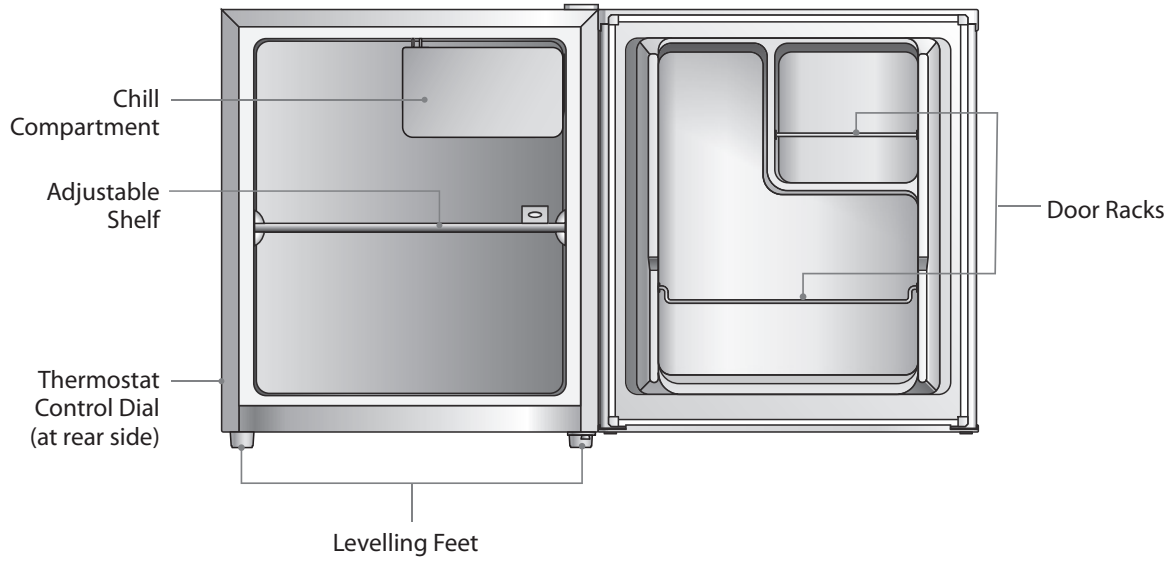

Rear View

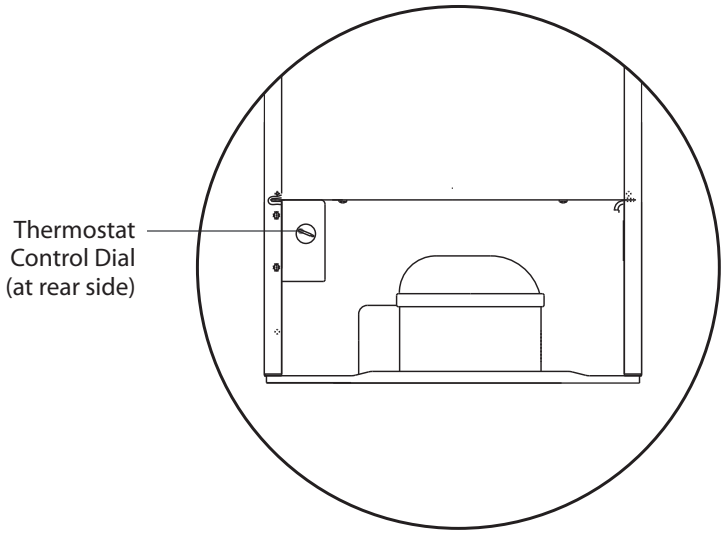

Operation

Switching On Your Unit

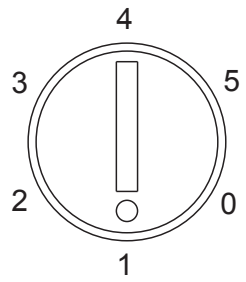

1. Connect the mains cable to the mains socket. The internal temperature of your unit is controlled by a thermostat. There are six settings, of which position **5** is the coldest and position **0** turns the unit off.
2. Adjust the thermostat control dial to the desired position, bear in mind that the higher the number, the lower the temperature. Position **3** recommended setting when operating at normal room temperature (between 16°C and 38°C).
3. The unit may not operate at the correct temperature if it is in a particularly hot or a particularly cold room, or if you open the door often.
4. To ensure that the unit is cool enough to sufficiently chill your food, wait 24 hours before filling it with food.
5. If you are concerned that your unit is not being kept cold enough and wish to check the temperature, you will need a special fridge/freezer thermometer. These are available from most supermarkets and hardware shops.

   Place the thermometer in the centre of the unit, where it can be read easily. Leave overnight, the temperature in the unit should be between -18°C or lower.

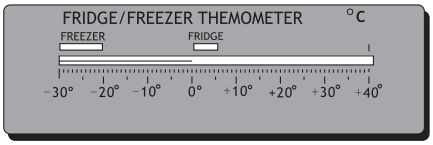

Adjusting the Temperature

The internal temperature of the unit is controlled by a thermostat. The recommended position is between **1** to **3** for colder working environments (i.e. during winter) and between **4** to **5** for hotter environments. Please adjust according to the environment.

Noises Inside the Unit!

You may notice that your unit makes some unusual noises. Most of these are perfectly normal, but you should be aware of them!

These noises are caused by the circulation of the refrigerant liquid in the cooling system. It has become more pronounced since the introduction of CFC free gases. This is not a fault and will not affect the performance of your unit. This is the compressor motor working, as it pumps the refrigerant around the system.

Tips for Keeping Food in the Unit

- Cooked meats/fishes should always be stored on a shelf above raw meats/fishes to avoid bacterial transfer. Keep raw meats/fishes in a container which is large enough to collect juices and cover it properly. Place the container on the lowest shelf.

- Leave space around your food, to allow air to circulate inside the unit. Ensure all parts of the unit are kept cool.
- To prevent transfer of flavours and drying out, pack or cover the food separately. Fruit and vegetables do not need to be wrapped.
- Always let pre-cooked food cool down before you put in the unit. This will help to maintain the internal temperature of the unit.
- To prevent cold air escaping from the unit, try to limit the number of times you open the door. We recommend that you only open the door when you need to put food in or take food out.

Cleaning

Defrosting

Frost might build up in the unit after it has been used for a period of time. Scrape away the frost using a plastic scraper (not included).

> ⚠ Do not use a metal or sharp instrument to scrap away the frost, nor should you use any electrical appliances to aid defrosting.

We recommend that defrosting should be carried out when the frost layer builds up to 10 mm (0.39”). Choose a time when the stock of frozen food is low, follow these procedures:

1. Take out the food, turn the unit off at the mains supply and leave the door open. Ideally, the frozen food should be put into another freezer. If this is not possible, wrap the food in several sheets of newspaper or large towels and then a thick blanket to keep it cool.
2. Place a shallow bowl or pan below the unit. Scrape away the frost using the plastic scraper. Defrosting the remaining frost can be speeded up by placing a bowl of hot water inside the unit and closing the door. As the solid frost loosens, scrape it away with the plastic scraper and remove.

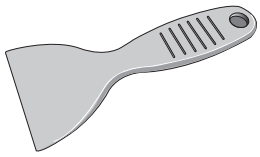

3. When defrosting is complete, clean your unit’s interior and exterior.

Cleaning the Interior and the Exterior of the Unit

- Remove the shelf before cleaning.
- Wipe the inside of the unit with a weak solution of bicarbonate soda and then rinse with warm water using a ‘wrung-out’ sponge or cloth. Wipe completely dry before replacing the shelf.
- Use a damp cloth to clean the exterior, and then wipe with a standard furniture polish. Make sure that the door is closed to avoid the polish getting on the magnetic door seal or inside the unit.
- The grille of the condenser at the back of the unit and the adjacent components can be vacuumed using a soft brush attachment.

Maintenance

Care When Handling / Moving the Unit

Hold the unit around its sides or base when moving it. Under no circumstances should it be lifted by holding the edges of the top surface.

Servicing

The unit should be serviced by an authorised engineer and only genuine spare parts should be used. Under no circumstances should you attempt to repair the unit yourself. Repairs carried out by inexperienced persons may cause injury or serious malfunction. Contact a qualified technician.

Switching Off for Long Periods of Time

When the unit is not in use for a long period of time, disconnect it from the mains supply, empty all food and clean the appliance, leaving the door ajar to prevent unpleasant smells.

Condensation

Condensation may appear on the outside of the unit. This may be due to a change in room temperature. Wipe off any moisture residue. If the problem continues, please contact a qualified technician for assistance.

Disposal

Old units still have some residual value. An environmentally friendly method of disposal will ensure that valuable raw materials can be recovered and used again. The refrigerant used in your unit and insulation materials require special disposal procedures. Ensure that none of the pipes on the back of the unit are damaged prior to disposal.

Up to date information concerning options of disposing of your old unit and packaging from the new one can be obtained from your local council office.

When disposing of an old unit break off any old locks or latches and remove the door as a safeguard.

Specifications

Model	CTT50W12
Storage Volume - Fresh Food Storage Compartment	42L
Storage Volume - Chill Compartment	4L
Storage Temperature - Fridge	fridge: 0 - 8°C, average ≤ 4°C
Storage Temperature - Chill Compartment	-2°C - +3°C
Energy Consumption	0.295kWh / 24h
Energy consumption **107 kWh per year**, based on standard test results for 24 hours. Actual energy consumption will depend on how the appliance is used and where it is located.	
Household Appliances Category	Category 3 (Refrigerator-Chiller and Refrigerator with a 0-star compartment)
Energy Grading	A+
EU Ecolabel	N/A
Defrosting Type	Manual Defrost
Climate Class	ST
This appliance is intended to be used at an ambient temperature between 16°C and 38°C.	
Airborne Acoustical Noise	41dB
Rated Voltage	220-240V~
Rated Current	0.45A
Overall Dimension (W x D x H)	440 x 470 x 510 mm

Features and specifications are subject to change without prior notice.

For general information about this appliance
and handy hints and tips, please visit
www.knowhow.com/knowledgebank or call **0344 5611234**.

Visit Partmaster.co.uk today for the easiest way to buy electrical spares and accessories. With over 1 million spares and accessories available we can deliver direct to your door the very next day. Visit www.partmaster.co.uk or call 0844 800 3456 (UK customers only) Calls charged at National Rate.



The symbol on the product or its packaging indicates that this product must not be disposed of with your other household waste. Instead, it is your responsibility to dispose of your waste equipment by handing it over to a designated collection point for the recycling of waste electrical and electronic equipment. The separate collection and recycling of your waste equipment at the time of disposal will help conserve natural resources and ensure that it is recycled in a manner that protects human health and the environment.
For more information about where you can drop off your waste for recycling, please contact your local authority, or where you purchased your product.

DSG Retail Ltd. (co. no. 504877)
Maylands Avenue, Hemel Hempstead, Herts., HP2 7TG, UK.

IB-CTT50W12-140429V2