DOMETIC

REFRIGERATION

HIPRO CARE

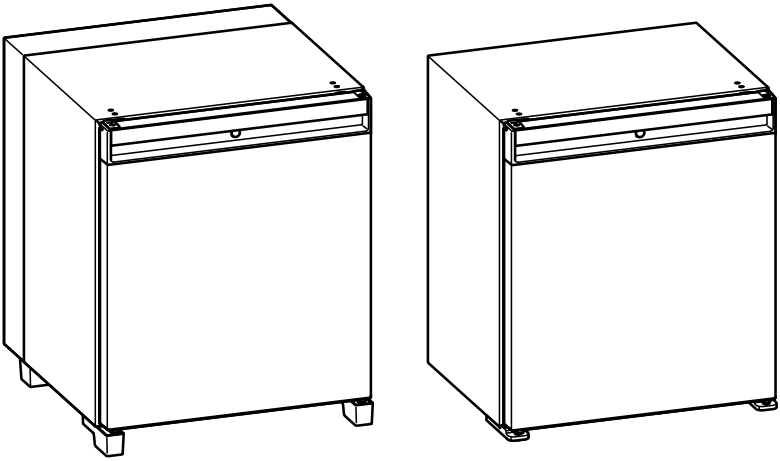

A30, A40, C60

EN **Mini fridge**
Operating Manual.....3

Copyright

© 2025 Dometic Group. The visual appearance of the contents of this manual is protected by copyright and design law. The underlying technical design and the products contained herein may be protected by design, patent or pending patent. The trademarks mentioned in this manual belong to Dometic Sweden AB. All rights are reserved.

English

1 Important notes....3
2 Explanation of symbols....3
3 Explanation of symbols on the device....4
4 Safety instructions....4
5 Scope of delivery....6
6 Intended use....6
7 Technical description....7
8 Operation....9
9 Cleaning and maintenance....13
10 Troubleshooting....14
11 Disposal....16
12 Warranty....16
13 Technical data....16

Please read these instructions carefully and follow all instructions, guidelines, and warnings included in this product manual in order to ensure that you install, use, and maintain the product properly at all times. These instructions MUST stay with this product.

By using the product, you hereby confirm that you have read all instructions, guidelines, and warnings carefully and that you understand and agree to abide by the terms and conditions as set forth herein. You agree to use this product only for the intended purpose and application and in accordance with the instructions, guidelines, and warnings as set forth in this product manual as well as in accordance with all applicable laws and regulations. A failure to read and follow the instructions and warnings set forth herein may result in an injury to yourself and others, damage to your product or damage to other property in the vicinity. This product manual, including the instructions, guidelines, and warnings, and related documentation, may be subject to changes and updates. For up-to-date product information, please visit documents.dometic.com.

2 Explanation of symbols

A signal word will identify safety messages and property damage messages, and also will indicate the degree or level of hazard seriousness.



DANGER!
Indicates a hazardous situation that, if not avoided, will result in death or serious injury.



WARNING!
Indicates a hazardous situation that, if not avoided, could result in death or serious injury.



CAUTION!
Indicates a hazardous situation that, if not avoided, could result in minor or moderate injury.



NOTICE!
Indicates a situation that, if not avoided, can result in property damage.



NOTE Supplementary information for operating the product.

3 Explanation of symbols on the device



Risk of fire/flammable materials

4 Safety instructions

Follow EPA use conditions.

General safety



WARNING! Electrocution hazard

- Ensure that the mini fridge has been installed by a qualified technician in accordance with the Dometic installation manual.
- Do not operate the mini fridge if it is visibly damaged.
- If this mini fridge's power cable is damaged, it must be replaced by the manufacturer, a service agent or a similarly qualified person in order to prevent safety hazards.
- This mini fridge may only be repaired by qualified personnel. Inadequate repairs may cause serious hazards.
- When positioning the mini fridge, ensure the supply cord is not trapped or damaged.
- Do not locate multiple portable socket-outlets or portable power supplies at the rear of the device.
- Plug the device to sockets that ensure proper connection especially when the device needs to be grounded.



WARNING! Fire hazard

- The refrigerant in the refrigerant circuit is highly flammable and in the event of a leakage combustible gases could build up if the appliance is in a small room. In the event of any damage to the refrigerant circuit:
  - Keep naked flames and potential ignition sources away from the mini fridge.
  - Ventilate the room well.
  - Switch off the mini fridge.
- **For mini fridges with R600a refrigerant:**
  - The refrigeration circuit contains a small quantity of an environmentally friendly but flammable refrigerant. It does not damage the ozone layer and does not increase the greenhouse effect. Any leaking refrigerant may ignite.
  - Do not use or store the mini fridge in confined spaces with none or minimal air flow.
  - Keep the installation recess for the mini fridge free of any electrical components and light sources which during normal or abnormal operation produce sparks or arcs (i.e. relays or fuse boxes).
- Keep the ventilation openings on the device housing or in installations free of obstructions.
- Do not use any mechanical objects or other means to speed up the defrosting process, other than those recommended by the manufacturer.
- Do not open or damage the refrigerant circuit.
- Do not use electrical devices inside the mini fridge unless they are recommended by the manufacturer for that purpose.



WARNING! Explosion hazard

Do not store any explosive substances, such as spray cans with propellants, in the mini fridge.



WARNING! Health hazard

- **For versions with absorption cooling:** Never open the absorber unit. It is under high pressure and can cause injury if it is opened.
- This device is not intended for use by persons (including children) with reduced physical, sensory or mental capabilities, or lack of experience and knowledge, unless they have been given supervision or instruction concerning use of the device by a person responsible for their safety.
- Children must be supervised to ensure that they do not play with the mini fridge.
- Cleaning and user maintenance may not be carried out by unsupervised children.
- Children aged from 3 to 8 years are allowed to load and unload the mini fridge.



CAUTION! Risk of crushing

Do not put your fingers into the hinge.



CAUTION! Health hazard

Foodstuff may only be stored in its original packaging or in suitable containers.



NOTICE! Damage hazard

- Check that the voltage specification on the data plate is the same as that of the power supply.
- Only use the cable supplied to connect the mini fridge to the AC mains.
- Never pull the plug out of the socket by the connection cable.
- Insufficient air flow results in a shortened lifespan and a reduced cooling performance. Observe the minimum spacings when installing the mini fridge to furniture (refer to the installation manual).
- Keep the condensate drain clean at all times.
- Only carry the mini fridge upright.



WARNING! Hazard due to unprofessional maintenance

It is hazardous for anyone other than an Authorized Service Person to service this appliance.
In Queensland the authorized Service Person MUST hold a Gas Work Authorization for hydrocarbon refrigerants to carry out servicing or repairs where the gas system is being opened or charged.

Operating the device safely



DANGER! Electrocution hazard

Do not touch exposed cables with your bare hands.



CAUTION! Electrocution hazard

Before starting the mini fridge, ensure that the power supply line and the plug are dry.



CAUTION! Health hazard

- Ensure only to put items in the mini fridge which may be chilled at the selected temperature.
- Food may only be stored in its original packaging or in suitable containers.
- Opening the door for long periods can cause significant increase of the temperature in the compartments of the mini fridge.
- Clean regularly surfaces that can come in contact with food and accessible drainage systems.
- Store raw meat and fish in suitable containers in the mini fridge, so that it is not in contact with and cannot drip onto other food.
- If the mini fridge is left empty for long periods:

- Switch off the mini fridge.
- Defrost the mini fridge.
- Clean and dry the mini fridge.
- Leave the door open to prevent mold developing within the mini fridge.

NOTICE! Damage hazard

> Do not place the mini fridge near naked flames or other heat sources (heaters, direct sunlight, gas ovens etc.).
> Ensure that the ventilation vents are not covered.
> Never immerse the mini fridge in water.
> Protect the mini fridge and the cable against heat and moisture.
> Ensure that foodstuffs do not touch the walls of the cooling area.

5 Scope of delivery

Quantity	Description
1	Mini fridge
1	**A30SBI, A40SBI, C60SBI:** Sliding hinge kit
1	Short operating manual
1	Operating manual (digital only)
1	Installation manual

6 Intended use

The refrigeration appliance (also referred to as mini fridge) is intended for cooling and storing beverages and food in closed containers, and fresh foods.

The mini fridge is designed to be used in household and similar applications such as:

- Staff kitchens in stores, offices and other working environments
- Farmhouses
- Hotels, motels and other residential type environments
- Bed and breakfast type environments
- Catering and similar non-retail applications

The mini fridge is **not** designed for installation in caravans or motor homes.

The mini fridge is suitable either as a built-in appliance or as a freestanding refrigeration appliance. Refer to the installation instructions.

The mini fridge is **not** suitable for

- Storage of corrosive, caustic or solvent-containing substances
- Storage of medicine
- Deep-freezing of foodstuff

This product is only suitable for the intended purpose and application in accordance with these instructions.

This manual provides information that is necessary for proper installation and/or operation of the product. Poor installation and/or improper operation or maintenance will result in unsatisfactory performance and a possible failure.

The manufacturer accepts no liability for any injury or damage to the product resulting from:

- Incorrect installation, assembly or connection, including excess voltage
- Incorrect maintenance or use of spare parts other than original spare parts provided by the manufacturer
- Alterations to the product without express permission from the manufacturer
- Use for purposes other than those described in this manual

Dometic reserves the right to change product appearance and product specifications.

7 Technical description

A30SBI, A30SFS, A40SBI, A40SFS: The mini fridge works with a noiseless absorber cooling technology.

- A30SBI, A30SFS: The mini fridge is equipped with one shelf and one door rack.
- A40SBI, A40SFS: The mini fridge is equipped with one shelf and two door racks.

C60SBI, C60SFS: The mini fridge works with a low-noise compressor cooling technology. The mini fridge is equipped with two shelves and two door racks.

The lower door rack is suitable for storing bottles up to 1.5 L volume (standard size). An optional bottle holder provides additional stability. The upper door rack is intended for storing smaller bottles or snacks.

The mini fridge is available as freestanding version **(FS)** and as built-in version **(BI)**.

All materials used are compatible for use with foodstuffs. The refrigerant circuit is maintenance-free.

Operating elements of the mini fridge

1

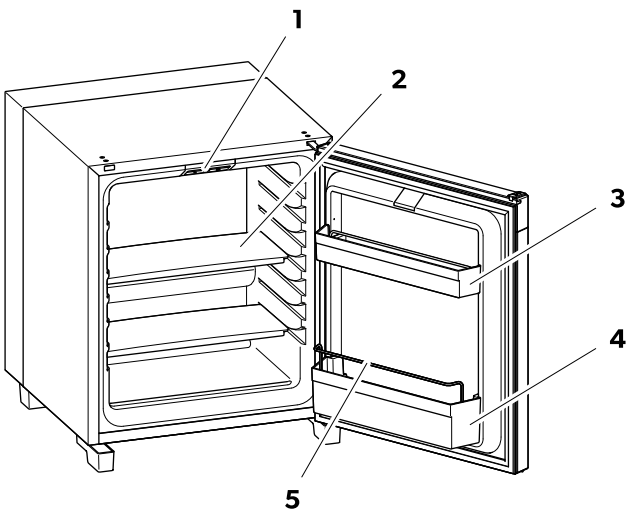

No. in Fig. 1 on page 7	Explanation
1	Interior light and operating panel

No. in Fig. 1 on page 7	Explanation
2	1 Shelf (A30SBI, A30SFS, A40SBI, A40SFS) 2 Shelves (C60SBI, C60SFS)
3	Upper door rack (A40SBI, A40SFS, C60SBI, C60SFS)
4	Lower door rack
5	Bottle holder

Operating panel

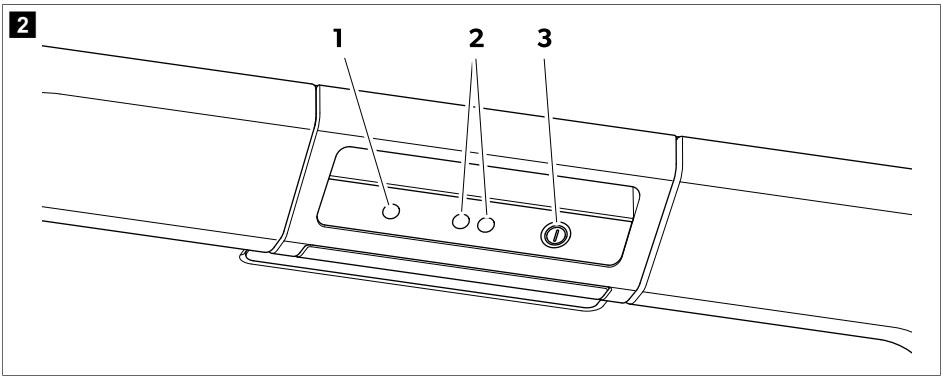

No.	Explanation
1	Indicator LED
2	Infrared door sensor
3	⏻ button Switching the mini fridge on and off Entering the temperature setting Entering the silent mode (C60SBI, C60SFS only)

Indicator LED

Color	Status	Description
Green	On	Mini fridge is cooling
Orange	On	Mini fridge stops cooling (temperature reached or auto-defrost function active)
	Flashing	An error occurred (see chapter Troubleshooting on page 14)
–	Off	Mini fridge is switched off or in silent mode (C60 only)

8 Operation

Before first use

NOTE Do not store goods in the device for the first 4 hours after start-up.

> Clean the device inside and outside for hygienic reasons.

Saving energy

- Only open the mini fridge as often and for as long as necessary.
- Avoid unnecessarily low temperature settings.
- For optimal energy consumption, position the shelves and drawers according to their position on delivery.
- On a regularly basis, make sure the door seal still fits properly.
- Clean dust and dirt from the condenser at regular intervals.

Positioning the shelves

> To position the shelves proceed as shown in Fig. 3 on page 9.

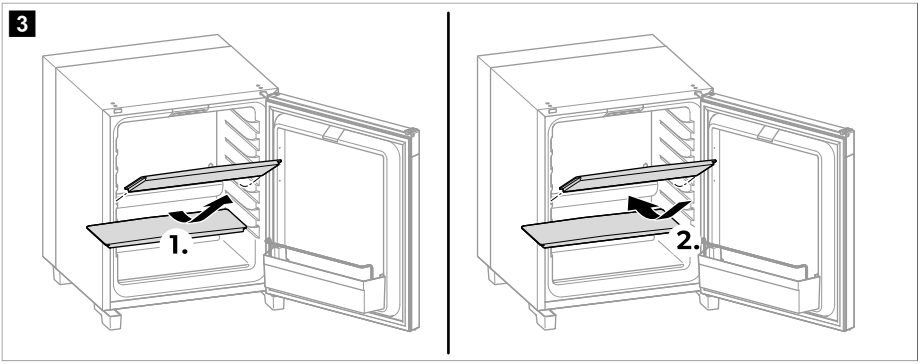

Positioning the door rack

> To position the door rack proceed as shown in Fig. 4 on page 10.

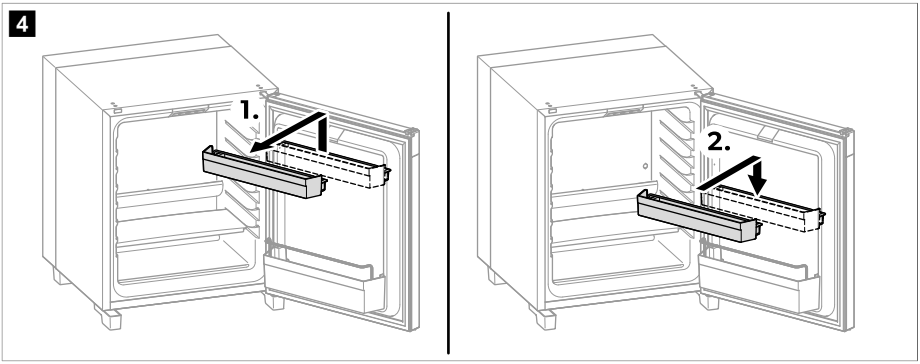

Switching the mini fridge on and off

NOTE

- The mini fridge is automatically switched on when connected to the power supply.
- When switched on for the first time or after not being used for a longer period of time, the mini fridge needs several hours to reach the set cooling temperature.
- Always switch off the mini fridge if you are not going to use it for a prolonged period of time.

> To switch on, press and hold the ⏻ button for 2 s (Fig. 5 on page 11).

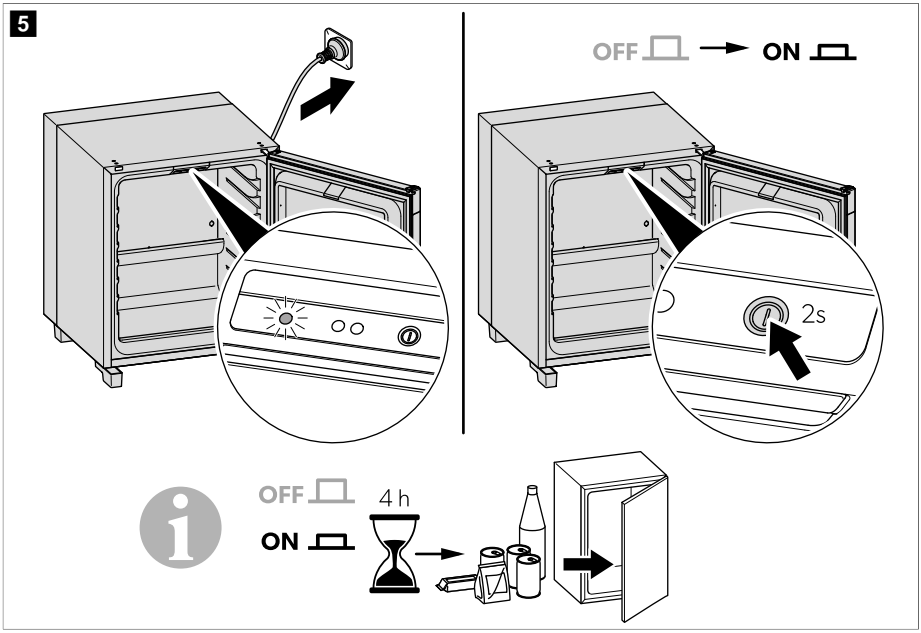

> To switch off, press and hold the ⏻ button for 6 s (Fig. 6 on page 11).

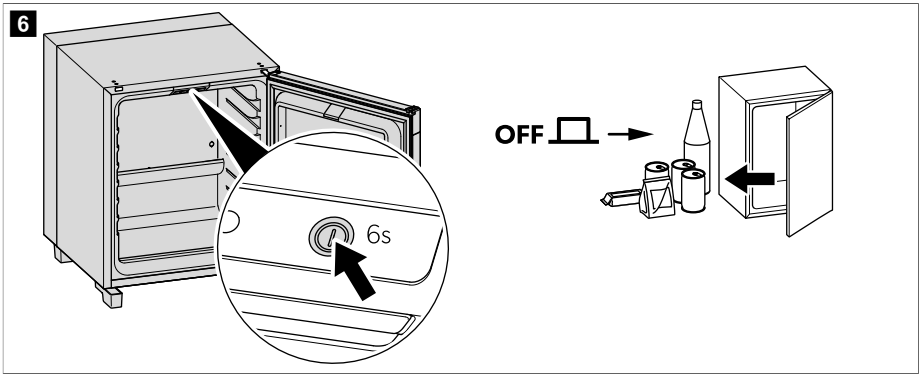

Setting the temperature

To avoid food waste, note the following:

- Keep temperature fluctuation as low as possible. Only open the mini frdige as often and for as long as necessary. Store the foodstuff in such a way that the air can still circulate well.
- The mini fridge is equipped with an automatic temperature regulation function. Select the average of the possible temperature values.
- Adjust the temperature to the quantity and type of the foodstuff.

- Foodstuff can easily absorb or release odor or taste. Always store foodstuff covered or in closed containers/ bottles.

The mini fridge is equipped with an automatic temperature regulation function. The temperature is set to 4 °C by default. The temperature can be adjusted to 2 °C , 4 °C , 7 °C or 12 °C . With each press of the ⏻ button the cooling temperature switches between the possible values. The selected temperature is indicated by the number of flashes of the indicator LED (see chapter Indicator LED on page 8).

> To set the temperature proceed as shown in Fig. 7 on page 12.

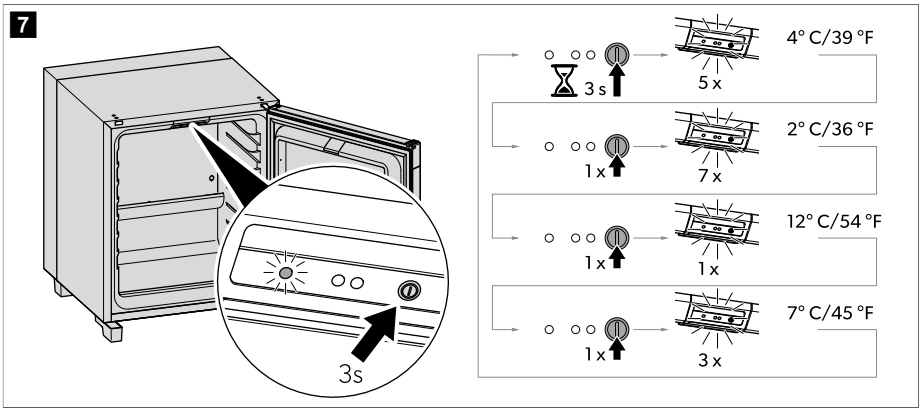

Setting the silent mode (only for C60SBI, C60SFS)

The mini fridge is equipped with a silent mode.

NOTE When the silent mode is activated, the temperature setting cannot be changed.

1. Set the desired cooling temperature (see chapter Setting the temperature on page 11).
2. To set the silent mode proceed as shown in Fig. 8 on page 13.

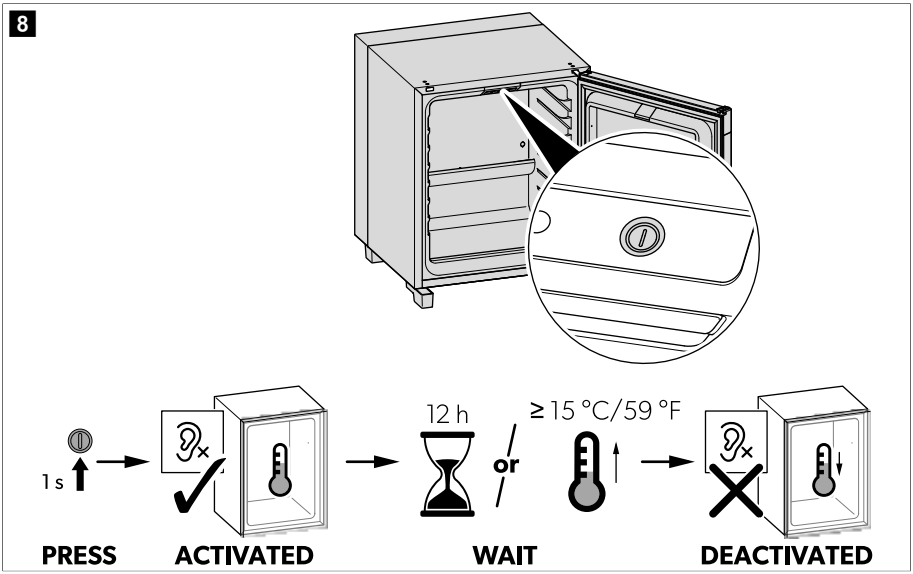

Defrosting

The mini fridge is equipped with an auto-defrost function.

Storing

If the mini fridge is not to be used for a longer period of time, proceed as follows:

1. Pull the power plug out of the socket.
2. Clean the mini fridge (see chapter Cleaning and maintenance on page 13).
3. Leave the door open to prevent odors from forming.

9 Cleaning and maintenance

WARNING! Electrocution hazard
Always disconnect the device from the mains before cleaning and maintenance.

NOTICE! Damage hazard

- Do not use abrasive cleaning agents or hard objects during cleaning as these can damage the device.
- Never use hard or sharp tools to remove ice or to free frozen objects on the device.
- Do not use any mechanical tools or any other tools to speed up the defrosting process.
- The light source can only be replaced by the manufacturer, a service agent or similarly qualified person to avoid hazard.

- Clean the device regularly and as soon as it becomes dirty with a damp cloth.
- Wipe the device dry with a cloth after cleaning.

> Check the condensate drain regularly.

  Clean the condensate drain when necessary. If it is blocked, the condensate collects on the bottom of the device.

> **For absorber versions:** Use a brush or soft cloth annually to remove dust from the absorber unit.

10 Troubleshooting

Problem	Possible cause	Suggested remedy
The mini fridge is not cooling. The indicator LED is **off**.	Power plug is not plugged in.	Insert power plug into socket.
	No voltage at the socket.	Check circuit breaker.
	The fuse of the electronics is defective.	> Contact an authorized service agent. > **Service agent only:** Replace the fuse.
The mini fridge is not cooling. The indicator LED is **on**.	**For versions with absorber cooling:** Heating cartridge defective	> Contact an authorized service agent. > **Service agent only:** Install new heating cartridge.
	Electronics or temperature sensors defective.	> Contact an authorized service agent. > **Service agent only:** Install new electronics or sensor.
	Cooling unit is defective.	> Contact an authorized service agent. > **Service agent only:** Replace the mini fridge.
	Mini fridge is in silent mode (C60 only).	No action required (Setting the silent mode (only for C60SBI, C60SFS) on page 12).
Mini fridge is not cooling. Indicator LED flashes orange for x times within a certain period of time.	Flashing 1x: NTC sensor is defective.	> Contact an authorized service agent. > **Service agent only:** Replace the NTC sensor.
	Flashing 3x: Heating cartridge is defective (only for versions with absorber cooling).	> Contact an authorized service agent. > **Service agent only:** Install a new heating cartridge.
	Flashing 5x: CPC (cooling performance control) error.	1. Temporarily disconnect the mini fridge from the power supply to reset the error. 2. Count the number of flashes that occur after the reset: • Flashing 1x: NTC sensor is defective. • Flashing 3x: Heating cartridge is defective (only for versions with absorber cooling). • No flashing: Error is reset. 3. Flashing 1x or 3x: Contact an authorized service agent.

Problem	Possible cause	Suggested remedy
		Note: After a longer period of time without troubleshooting, the LED changes back to the interval of flashing 5x.
Mini fridge is not cooling. Interior light is flashing continously.	**For versions with absorber cooling:** Error during self-test of the cooling unit.	> Check the cooling unit for leaks. > Check the ventilation grille of the cooling unit and ensure optimal performance. > Wait 24 h for the device to restart cooling. If the device does not restart within 24 h , contact an authorized service agent.
Poor cooling performance	Cooling unit is not sufficiently ventilated.	Provide sufficient ventilation (see Installation Manual).
	Mini fridge is exposed to direct sunlight.	Remove the mini fridge out of direct sunlight.
	Door of mini fridge is not closed with a tight seal.	Check distances (see Installation Manual). > Contact an authorized service agent. > **Service agent only:** Replace door seal
	Mini fridge recently filled.	Check cooling again after 5 h … 6 h .
	For versions with absorber cooling: The input voltage is too low or too high.	Check input voltage.
	Auto-defrost function is active.	No action required (see chapter Defrosting on page 13).
Frost formation in the mini fridge compartment	Door of mini fridge is not closed with a tight seal.	Check distances (see Installation Manual). > Contact an authorized service agent. > **Service agent only:** Replace door seal
	The minibar continues to cool down without interruption (cooling temperature drops below the set value).	Contact an authorized service agent.
Interior lighting is not working	Interior lighting is defective.	> Contact an authorized service agent. > **Service agent only:** Change interior lighting
	Surface of infrared door sensor is covered, e.g., by condensation.	Clean the surface of the infrared door sensor.

11 Disposal

WARNING! Fire hazard

> The refrigerant is highly flammable. Do not open or damage the refrigerant circuit.
> The insulation of the device contains an insulating gas (see data plate). Do not damage the insulation.

Recycling packaging material: Place the packaging material in the appropriate recycling waste bins wherever possible.

Recycling products with non-replaceable batteries, rechargeable batteries, or light sources:

- If the product contains any non-replaceable batteries, rechargeable batteries, or light sources, you don't have to remove them before disposal.
- If you wish to finally dispose of the product, ask your local recycling center or specialist dealer for details about how to do this in accordance with the applicable disposal regulations.

12 Warranty

If the product does not work as it should, please contact your retailer or the manufacturer's branch in your country (see dometic.com/dealer). The warranty applicable to your product is 2 year(s).

For repair and warranty processing, please include the following documents when you send in the device:

- A copy of the receipt with purchasing date
- A reason for the claim or description of the fault

Note that self-repair or nonprofessional repair can have safety consequences and might void the warranty.

Australia only

Our goods come with guarantees that cannot be excluded under the Australian Consumer Law. You are entitled to a replacement or refund for a major failure and for compensation for any other reasonably foreseeable loss or damage. You are also entitled to have the goods repaired or replaced if the goods fail to be of acceptable quality and the failure does not amount to a major failure.

This warranty policy is subject to the conditions and guarantees which are mandatory as implied by the Consumer Guarantees Act 1993(NZ).

Local support

Please find local support at the following link address: dometic.com/dealer

13 Technical data

	HiPro CARE **A30SBI, A30SFS**	HiPro CARE **A40SBI, A40SFS**	HiPro CARE **C60SBI, C60SFS**
Input voltage		220 V~ ... 240 V~ 50 / 60 Hz	
Rated input power		65 W	
Total volume	27 L	33 L	49 L

	HiPro CARE **A30SBI, A30SFS**	HiPro CARE **A40SBI, A40SFS**	HiPro CARE **C60SBI, C60SFS**
Climate class and intended ambient temperature use		**N:** 16 °C … 32 °C **T:** 16 °C … 43 °C	
Settable temperature range		2 °C … 12 °C	
Refrigerant	R717		R600a
Dimensions (WxHxD)	**BI:** 384 × 520 × 446 mm **FS:** 384 × 550 × 463 mm	**BI:** 405 × 550 × 466 mm **FS:** 405 × 580 × 483 mm	**BI:** 490 × 565 × 510 mm **FS:** 490 × 595 × 519 mm
Weight	**BI:** 17 kg **FS:** 18 kg	**BI:** 19 kg **FS:** 20 kg	**BI:** 19.8 kg **FS:** 22.2 kg
Test/ certificates			

DOMETIC



dometic.com

2025-05-07
4445104183

YOUR LOCAL DEALER

dometic.com/dealer

YOUR LOCAL SUPPORT

dometic.com/contact

YOUR LOCAL SALES OFFICE

dometic.com/sales-offices

A complete list of Dometic companies, which comprise the Dometic Group, can be found in the public filings of:
DOMETIC GROUP AB • Hemvärnsgatan 15 • SE-17154 Solna • Sweden