USER MANUAL

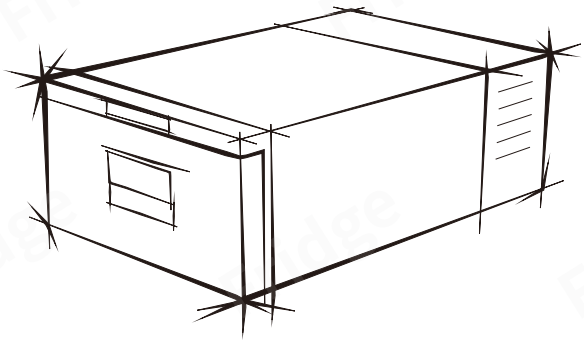

Model D30
DC Drawer Refrigerator

Please read this operating manual carefully before starting the device.
Keep it in a safe place for future reference.

CONTENTS

1.SAFETY INSTRUCTIONS Page1

2.PRODUCT FEATURES Page2

3.PRODUCT STRUCTURE Page2

4.INSTALLATION Page2

5.FUNCTION AND OPERATION Page3

6.CARE AND MAINTENANCE Page4

7.TROUBLESHOOTING Page5

8.WARRANTY Page6

9.TECHNICAL INFORMATION Page6

1.SAFETY INSTRUCTIONS

WARNING!

- Do not operate the appliance if it is visibly damaged.
- Do not block the gaps of the fridge with things like pin, wire, etc.
- Do not expose the appliance to rain or soak it in water.
- Do not place the appliance near naked flames or other heat sources (heaters, direct sunlight, gas ovens etc.)
- Do not store any explosive substances like spray cans with a flammable propellant.
- Ensure the supply cord is dry and not trapped or damaged. Do not locate multiple portable socket-outlets or portable power supplies at the rear of the appliance.
- Check the voltage specification on the type plate corresponds to that of the energy supply. The appliance is only to be used with the power supply unit provided with the appliance.
- Do not use electrical appliances inside the food storage compartments of the appliance, unless they are of the type recommended by the manufacturer.
- Once unpacked and before turning on, the appliance must be placed on a level surface for more than 6 hours.
- Make sure that the appliance stays horizontally when it is running. The tilt angle must be less than 5° for long time running and be less than 45° for short time running.
- Keep the ventilation openings in the unit casing or in the built-in structure free of obstacles.
- Keep the appliance stable on the ground or in the car; Do not drain upside down.

CAUTION!

- Repairs may only be carried out by qualified personnel. Incorrect repair may cause danger. The lamp and supply cord must be replaced by the manufacturer or qualified persons.
- The installation of DC power in the boat must be handled by qualified electricians.
- Children shall not play with the appliance. Cleaning and user maintenance shall not be made by children without supervision.
- The appliance can be used by children aged from 8 years and above and persons with reduced physical, sensory or mental capabilities or lack of experience and knowledge if they've been given supervision or instruction concerning use of the device in a safe way and understand the hazards.

NOTICE!

- Disconnect the power supply before each cleaning and maintenance and after every use.
- Do not use sharp tools to defrost; Do not damage the refrigerant circuit.
- Risk of child entrapment. Before you throw away your old refrigerator or freezer: take off the doors: leave the shelves in place so that children may not easily climb inside.
- Check if the cooling capacity of the appliance is suitable for storing the food or medicine. Food may only be stored in its original packaging or in suitable containers.
- If the appliance is left empty for long periods, switch off, defrost, clean, dry, and leave the door open to prevent mould developing within the appliance.
- The appliance is intended to be used in household and similar applications such as:

- Staff kitchen areas in shops, offices and other working environments;
- Camping, Farm houses and by clients in hotels, motels and other residential environments;
- Bed and breakfast type environments;
- Catering and similar non-retail applications.

Please according to local regulations regarding disposal of the appliance for its flammable refrigerant and blowing gas.

2.PRODUCT FEATURES

- High-efficiency DC compressor and conversion module.
- CFC free and great heat insulation.
- DC12V/24V or AC 100~240V (with an adapter) power supply.
- Lowest cooling to 0°C/32°F (based on 25°C/77°F room temperature).
- Intelligent battery protection system.
- LED digital display for temperature setting.
- Removable wire racks to adjust inner space.
- Flexible drawer design.

3.PRODUCT STRUCTURE

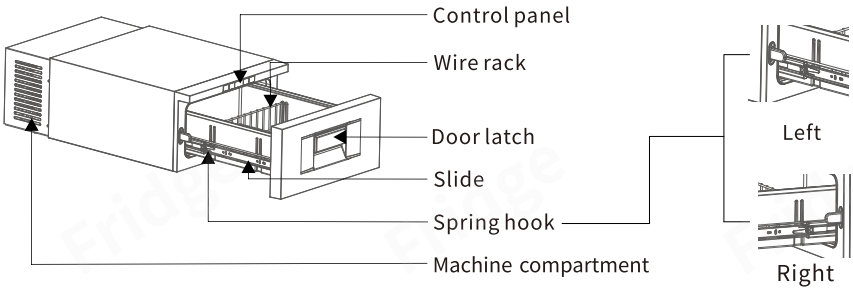

4.INSTALLATION

1)Ensure that the device is not damaged when opening the packaging after receiving the product. Any transportation damage must be reported promptly to the reseller. Handle the product with the utmost care and attention.

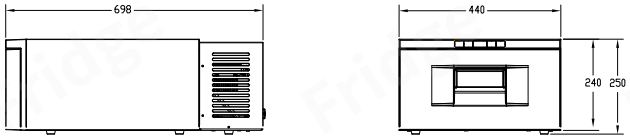

2)The fridge dimension is 698*440*250mm (27 1/2*17 5/16*9 7/8 inch), when choosing the installation location, ensure that the air heated by the liquefier can be drawn off.

3)To avoid voltage loss and therefore a drop in performance, keep the cable route as short as possible and do not interrupt it with additional switches, plug or power strips.

4)When cleaning, pull down the left spring hook and pull up the right spring hook at the same time, then remove the drawer slightly. When install the drawer back, align the slide rails on both sides and push it into the fridge.

⚠ **Be careful of the sharp edges to avoid injury!**

5.FUNCTION AND OPERATION

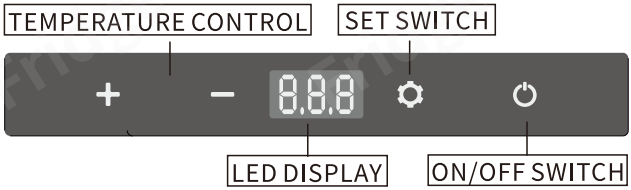

• **Display Screen Initialization**:connect to DC 12V/24V power or AC 100-240V power (with an adapter), the buzzer will make a long beep, and the display will light up for 2 seconds then enter the standby mode.

• **Power On/Off** : Press ⏻ to switch ON/OFF.

• **Temperature Setting**:Press + or − for temperature setting. Range:-20°C~20°C. (-4~68°F)

• **Cooling Mode**:Press ⚙ to choose HH (Fast cooling) or EE(Energy-saving).
*Factory setting is HH.

• **Battery Protection Mode**:Long press ⚙ for three seconds until screen flashes, then select three battery protection modes H(High), (Medium) and L(Low) by clicking ⚙ again. (*Factory setting is H.)



From left to right: L/M/H.

Voltage reference:

INPUT / MODE	DC 12V		DC 24V	
	CUT OUT	CUT IN	CUT OUT	CUT IN
L	8.5V	10.9V	21.3V	22.7V
M	10.1V	11.4V	22.3V	23.7V
H	11.1V	12.4V	24.3V	25.7V

* the voltage is theoretical value, there may be a deviation in different sceneries.

* H should be set when the product is connected to car power, and M or L should be set when it is connected to a portable battery or other back-up battery.

• **Temperature Unit Setting**: switch off the fridge, long press ⚙ for 3 seconds until displays E1, and switch to E5 by pressing ⚙ again, then press + or − to switch Celsius or Fahrenheit. (*Factory setting is °C.)

• **Reset**: switch off the fridge, long press ⚙ for 3 seconds until displays E1, under E1 mode, long press + − at the same time for seconds to reset the settings.

• **Recommended temperature for common food:**

						
Drinks	Fruits	Vegetable	Delicatessen	Wine	Ice cream	Meat
5°C/41°F	5~8°C/41~46°F	3~10°C/37~50°F	4°C/39°F	10°C/50°F	-10°C/14°F	-18°C/0°F

6.CARE AND MAINTENANCE

■Cleaning:

- Switch off and unplug the device first to avoid electric shock.
- Use wet cloth to clean the device and dry it.
- Do not soak the fridge in water and do not wash it directly.
- Do not use abrasive cleaning agents during cleaning as these can damage the device.

■Storage:

If the device will not be in use for a long time, please follow the instruction:

- Switch off and unplug the device.
- Take out all the items stored in the device.
- Wipe off excess water with a soft rag.
- Put the fridge in a cool and dry place.
- Leave the lid slightly open to prevent odors from forming.
- Recommended storage environment:
  ambient temperature: 25°C, ambient humidity: ⩽ 75%.

■Defrosting:

Humidity can form frost in the interior of the cooling device or on the evaporator. This reduces the cooling capacity. Defrost the device in good time to avoid this.

- Switch off and unplug the device first to avoid electric shock.
- Take out all the items stored in the device.
- Keep the lid open.
- Wipe off the defrosted water.

Never use hard or pointed tools to remove ice or to loosen objects which have frozen in place.

7.TOUBLESHOOTING

Issues	Cause/Suggestions
Refrigerator does not work	• Check if the switch is on. • Check if the plug and socket are connected well. • Check if the fuse has been burnt. • Check if the power supply is malfunctioned. • Switch on/off the fridge frequently may cause start delay of the compressor.
Refrigerator compartments are too warm	• The door is opened frequently. • A large amount of warm or hot food was stored recently. • The refrigerator has been disconnected for a long time.
Food is frozen	• The temperature was set too low.
There is "water flow" noise from inside the refrigerator	• It's a normal phenomenon, caused by the flow of refrigerant.
There are waterdrops around the refrigerator casing or door gap	• It's a normal phenomenon, the moisture will condense to water when it touches a cold surface of the refrigerator.
The compressor is slightly noisy when starting	• It's a normal phenomenon, the noise will be reduced after the compressor works stably.
Code F1 displayed	• Possible cause: low voltage to fridge. Adjust the battery protection from High to Medium or from Medium to Low.
Code F2 displayed	• Possible cause: condenser fan is overloaded. Disconnect power to fridge for 5 minutes & re-start. If the code shows again, contact manufacturer for service.
Code F3 displayed	• Possible cause: the compressor starts too frequently. Disconnect power to fridge for 5 minutes & re-start. If the code shows again, contact manufacturer for service.
Code F4 displayed	• Possible cause: compressor not kicking in. Disconnect power to fridge for 5 minutes & re-start. If the code shows again, contact manufacturer for service.
Code F5 displayed	• Possible cause: overheating of the compressor & electronics. Disconnect power to fridge for 5 minutes & re-start. If the code shows again, contact manufacturer for service.
Code F6 displayed	• Possible cause: no parameter can be detected by the controller. Disconnect power to fridge for 5 minutes & re-start. If the code shows again, contact manufacturer for service.
Code F7 or F8 displayed	• Possible cause: temperature sensor is faulty. Contact manufacturer for service.

8.WARRANTY

If the device gets malfunctional, limited warranty will be provided for 1 year from the date of purchase, except following situations:

- Contrived damage.
- Damage caused by force majeure such as earthquake, conflagration, etc.
- Damage from inappropriate use or violating this instruction.
- Damage or malfunction caused by disassembling.

9.TECHNICAL INFORMATION

MODEL	D30
RATED VOLTAGE	DC12/24V or AC100~240V(using dedicated adapter)
RATED POWER	60W
CAPACITY	20L/0.71cu.ft.
NOISE	⩽45dB
TEMPERATURE SETTING RANGE	-20~20°C (-4~68°F)
CLIMATE CATEGORY	T/ST/N/SN
DIMENSIONS(L*W*H)	698*440*250mm / 27 1/2*17 5/16*9 7/8 inch
NET WEIGHT	17.4kg/38.36 lb

*Due to product improvement, the technical information might be different from actual information, please refer to the rating label on the product.