Miele

Operating instructions
Fridge-freezer



It is **essential** to read these operating and installation instructions before installing and using the appliance. This prevents both personal injury and damage to the appliance.

en - AU, NZ

M.-Nr. 12 124 610

Contents

Warning and Safety instructions 5

Caring for the environment 16

Installation 17
Installation location 17
Climate range 18
Ventilation requirements 18
Installing multiple refrigeration appliances 19
Side-by-side installation 19
Changing the door hinging 19
Fitting the supplied wall spacers 20
Fitting the insect protection grilles supplied 20
Installation 21
Aligning the appliance 22
Integrating the refrigeration appliance in a run of kitchen units 23
Appliance dimensions 25
Electrical connection 28

Saving energy 29

Guide to the appliance 30
Appliance overview 30
Control panel with start display 32
Settings mode 32
Selecting the desired function in Settings mode 34
Adjusting the interior fittings 35
Moving the door/bottle shelf 35
Clipping the egg trays on 35
Adjusting or removing the bottle holder 35
Moving the adjustable shelves 35
Moving the split shelf 36
Moving split shelves 36
Adjusting the bottle rack 36
Space for a baking tray 37
Moving the charcoal filters 37
Accessories supplied 38
Optional accessories 38

Switching on and off 39
Before using for the first time 39
Connecting the appliance 39
Switching on the appliance 39

Contents

Switching off the appliance 39
Switching off for longer periods of time 40

The correct temperature 41
Temperature display 42
Setting the temperature 42
Possible temperature settings 42

Using SuperCool and DynaCool 43
Switching DynaCool on and off 44

Selecting further settings 45
Explanation of the different settings 45
Party mode 45
Holiday mode 45
Switching the lock function on 46
Sabbath mode 47
Information on Sabbath mode 48
Changing the time before the door alarm is triggered 48
Miele@home 48
Changing the volume of the alarms and buzzers / 50
Adjusting the display brightness 51
Switching off Demo mode 51
Resetting the settings to their factory default settings 51
Information 51
Charcoal filter change indicator 52
Cleaning mode 52

Door alarm 53

Storing food in the refrigerator section 54
Different storage zones 54
Food which is not suitable for storage in the refrigerator 55
Notes on buying food 55
Storing food correctly 56

Storing food in the DailyFresh drawer 57

Defrosting 59

Cleaning and care 60
Cleaning agents 60
Preparing the refrigeration appliance for cleaning 61
Cleaning the interior of the machine 61
Cleaning accessories by hand or in the dishwasher 62

Contents

Removing and dismantling accessories for cleaning 62
Removing and cleaning the insect protection grilles 64
Cleaning the front of the appliance and the side panels 66
Cleaning the door seal 66
Cleaning the ventilation gaps 66
After cleaning 67

Problem solving guide 68

Noises 74

Service 75
Contact in case of fault 75
Warranty 75

This refrigeration appliance complies with current local and national safety requirements. However, inappropriate use can lead to personal injury and damage to property.

Please read the operating and installation instructions carefully before using the refrigeration appliance for the first time. They contain important information on safety, installation, use and maintenance of the appliance. This is to protect yourself from injury and from damaging your refrigeration appliance.

In accordance with standard IEC 60335-1, Miele expressly and strongly advises that you read and follow all information provided concerning the installation of the refrigeration appliance, as well as safety notes and warnings.

Miele cannot be held liable for injury or damage caused by non-compliance with these instructions.

Keep these instructions in a safe place and pass them on to any future owner.

Correct application

▶ This appliance is designed for domestic use and for use in similar environments by guests in hotel or motel rooms, bed & breakfasts and other typical living quarters. This does not include common/ shared facilities or commercial facilities within hotels, motels or bed & breakfasts.

This appliance is not suitable for outdoor use.

▶ This appliance is intended for domestic use only for the cooling and storing of food and drinks.
Any other usage is not permitted.

▶ This appliance is not suitable for storing and keeping cool medicines, blood plasma, laboratory preparations or similar substances or products. Incorrect use of the appliance for such purposes may cause deterioration of the items stored.
The appliance is also not suitable for use in areas where there is a risk of explosion.
Miele cannot be held liable for damage resulting from incorrect or improper use or operation of the appliance.

▶ This appliance is not intended for use by persons (including children) with reduced physical, sensory or mental capabilities or lack of experience and knowledge, unless they have been given supervision and instruction concerning its use by a person responsible for their safety.
They may only use the appliance unsupervised if its operation has been clearly explained to them and they are able to use it safely and are able to understand and recognise the possible dangers caused by incorrect operation.

Safety with children

▶ Young children must not be allowed to use this appliance.

▶ Older children may only use the appliance when its operation has been clearly explained to them and they are able to use it safely, recognising the dangers of misuse.

▶ Cleaning work may only be carried out by older children under the supervision of an adult.

▶ Please supervise children in the vicinity of the appliance and do not let them play with it.

▶ Danger of suffocation! Children may be able to wrap themselves in packing material (e.g. foil) or pull it over their head with the risk of suffocation. Keep packaging material away from children.

Technical safety

▶ The refrigerant circuit has been checked for leaks. The refrigeration appliance complies with all current local and national safety requirements.



▶ Warning: Risk of fire / Flammable materials.

The refrigerant inside the appliance (details on the data plate) is environmentally friendly but flammable.
The use of this refrigerant does, however, sometimes lead to a slight increase in the noise level of the appliance. In addition to the noise of the compressor, you might be able to hear the refrigerant flowing around the system. Unfortunately, these effects cannot be avoided, but they do not not affect the performance of the refrigeration appliance.
When transporting and installing the refrigeration appliance, ensure that no parts of the cooling circuit are damaged. Splashes of refrigerant can damage the eyes and leaking refrigerant can ignite.
In the event of any damage:

- Avoid naked flames or anything which creates a spark.
- Disconnect the refrigeration appliance from the mains electricity supply.
- Ventilate the room in which the appliance is located for several minutes.
- Call Miele.

▶ The more refrigerant there is in a refrigeration appliance, the larger the room should be in which it is installed. In the event of a leakage, if the appliance is in a small room, there is the danger of a combustible gas/air mixture building up. For every 8 g of refrigerant, at least 1 m^3 of room space is required. The amount of refrigerant in the refrigeration appliance is stated on the data plate inside the appliance.

▶ To avoid the risk of damage to the appliance, make sure that the connection data (fuse rating, frequency and voltage) on the data plate corresponds to the household supply. Check that this is the case before connecting the appliance.
Consult a qualified electrician if in any doubt.

▶ The electrical safety of this appliance can only be guaranteed when correctly earthed. It is essential that this standard safety requirement is met. If in any doubt please have the electrical installation tested by a qualified electrician.

▶ Temporary or permanent operation with a self-sufficient or non-mains synchronous energy supply system (e.g. isolated networks, back-up systems) is possible. A requirement for the operation is that the energy supply system complies with all current local and national requirements that apply to stand-alone, solar and/or battery systems.
The protective measures provided in the installation and in this Miele product must also be assured in their function and operation in isolated operation or in non-mains synchronous operation, or replaced with equivalent measures in the installation.

▶ If the electrical connection cable supplied is damaged, it must only be replaced by an original spare part to prevent a hazard for the user. Miele can only guarantee the safety of the appliance when original Miele spare parts are used.

▶ Do not connect the appliance to the mains electricity supply by a multi-socket unit or an extension lead. These do not guarantee the required safety of the appliance (e.g. danger of overheating).

▶ If moisture gets into electrical components or into the mains connection cable, it could cause a short circuit. Therefore, do not operate this refrigeration appliance in areas which are exposed to moisture (e.g in a garage or laundry).

▶ This appliance must not be installed and operated in mobile installations (e.g. on a ship).

▶ Do not use a damaged appliance. It could be dangerous. Check the appliance for visible signs of damage.

▶ This refrigeration appliance is not intended for use as a built-in appliance.

▶ During installation, maintenance and repair work, the appliance must be disconnected from the mains electricity supply. It is only completely isolated from the electricity supply when:

- the mains circuit breaker has been switched off, or
- the screw-out fuse is removed (in countries where this is applicable), or
- it is switched off at the wall socket and the plug is withdrawn from the socket. Do not pull the mains connection cable but the mains plug to disconnect your appliance from the mains electricity supply.

▶ Repairs and other work by unqualified persons could be dangerous. Maintenance work and repairs to electrical appliances must only be carried out by a Miele authorised technician.

▶ The manufacturer's warranty will be invalidated if the appliance is not repaired by a Miele authorised technician.

▶ Faulty components must only be replaced with genuine Miele original spare parts. Miele can only guarantee the safety standards of the appliance when Miele spare parts are used.

▶ This refrigeration appliance is supplied with a special lamp to cope with particular conditions (e.g., temperature, moisture, chemical resistance, abrasion resistance and vibration). This lamp must only be used for the purpose for which it is intended. The lamp is not suitable for room lighting. Replacement lamps may only be replaced by a Miele authorised technician. This refrigeration appliance contains several light sources with at least energy efficiency class F.

▶ In areas which may be subject to infestation by cockroaches or other vermin, pay particular attention to keeping the appliance and its surroundings clean at all times. Any damage caused by cockroaches or other vermin will not be covered by the warranty.

Correct installation

▶ When installing the refrigeration appliance, it is a mandatory requirement to follow the operating instructions supplied with it.

▶ Change the door hinging (if necessary) as described in the installation instructions supplied with the appliance.

▶ Refrigeration appliances with an “S” in the model identifier can be installed next to each other as a side-by-side combination:

- Carry out installation as described in the installation instructions supplied with the appliance.
- Do not change the door hinging as the arrangement of the refrigeration appliances is predefined.

▶ Always wear protective gloves when transporting and installing the refrigeration appliance.

▶ Two people are required to install the refrigeration appliance.

Correct use

▶ This refrigeration appliance is designed for use within specific ambient temperatures (climate range). Do not use it in ambient temperatures for which it is not designed. The climate class is stated on the data plate inside the refrigeration appliance. A lower ambient temperature will cause the compressor to switch off for longer periods, meaning that the refrigeration appliance is unable to maintain the required temperature.

▶ To ensure proper air flow in and out of the appliance, the ventilation gaps in the appliance and built-in structure must not be covered or blocked in any way. This would also increase the energy consumption and could cause damage to the appliance.

▶ If storing food which contains a lot of fat or oil in the appliance or the appliance door, make sure that it does not come into contact with plastic components as this could cause stress cracks or break the plastic. Make sure that no fat or oil leaks onto the plastic parts of the appliance.

▶ Risk of fire and explosion! Do not store any explosive materials or products containing flammable propellants (e.g. spray cans) in the refrigeration appliance. Electrical components can cause flammable mixes of gases to ignite.

▶ Danger of explosion! Do not operate any electrical equipment (e.g. an electric ice cream maker) inside the appliance. Danger of sparking and explosion.

▶ Food stored for too long may present a risk of food poisoning. Storage times will depend on several factors, including the freshness and quality of the food, as well as the temperature at which it is stored. Follow the instructions given on the food manufacturer's packaging regarding storage conditions and use-by dates.

Stainless steel appliances

▶ The coated stainless steel surface can be damaged by adhesives and will lose its dirt-repelling properties. Do not adhere sticky notes, transparent tape, masking tape or other adhesives onto the stainless steel surface.

▶ The surface is susceptible to scratching. Even magnets can cause scratches.

Accessories and spare parts

▶ Only use original Miele accessories. Using spare parts or accessories from other manufacturers will invalidate the warranty, and Miele cannot accept liability.

▶ Miele will guarantee to supply functional spare parts for a minimum of 10 years and up to 15 years following the discontinuation of your refrigeration appliance.

Cleaning and care

▶ Do not use any oils or grease on the door seals, as these will cause the seals to deteriorate and become porous with time.

▶ Do not use a steam cleaning appliance to clean this appliance. Steam could reach the electrical components and cause a short circuit.

▶ Warning: Do not use any mechanical tools or other types of aid which are not recommended by the manufacturer to accelerate the defrosting process.

▶ Sharp edged or pointed objects will damage the evaporator, causing irreversible damage to the appliance. Do not use sharp edged or pointed objects to

- remove frost and ice, or accelerate the defrosting process,
- separate frozen foods and remove ice trays.

▶ Never place electric heaters or candles in the appliance to defrost it. These can damage the plastic parts.

▶ Do not use defrosting sprays or de-icers, as they might contain substances which could damage the plastic parts or which could cause a build-up of gases and pose a danger to health.

Transport

▶ To avoid damage to the appliance, always transport it upright and in its packaging.

▶ Risk of injury and damage! The refrigeration appliance is very heavy and must be transported by two people.

Disposal of your old appliance

▶ Children playing could become trapped in the refrigeration appliance and could suffocate.

- Remove the appliance door(s).
- Remove the drawers.
- Leave the adjustable shelves in the refrigeration appliance so children cannot climb inside.
- If your old refrigeration appliance has a door lock, destroy it. This way you will prevent the risk of playing children accidentally locking themselves in and endangering their lives.

▶ Risk of electric shock!

- Cut the power plug off the mains connection cable.
- Cut the mains connection cable off the old appliance.

▶ Dispose of everything separately from the old appliance.

▶ During and after disposal, make sure that the refrigeration appliance is not placed near petrol or other flammable gases and liquids.

▶ Risk of fire due to escaping oil or refrigerant!
The refrigerant and oil inside the appliance are flammable. In high enough concentrations, escaping refrigerant or oil may ignite if they come into contact with an external heat source.
During disposal, make sure that the cooling circuit is not damaged in order to prevent refrigerant and oil escaping in an uncontrolled manner (see the data plate for details of the refrigerant).

▶ Splashes of coolant can damage the eyes. Be careful not to damage any part of the pipework whilst awaiting disposal, e.g. by

- puncturing the refrigerant channels in the condenser,
- bending any pipework, or
- scratching the surface coating.

Symbol on the compressor (depending on model)

This information is only relevant for recycling. There is no risk during normal operation.



▶ The oil in the compressor can be fatal if swallowed or if it penetrates the airways.

Caring for the environment

Disposal of the packing material

The transport and protective packing has been selected from materials which are environmentally friendly for disposal, and can normally be recycled.

Recycling the packaging reduces the use of raw materials in the manufacturing process and also reduces the amount of waste in landfill sites. Ensure that any plastic wrappings, bags etc. are disposed of safely and kept out of the reach of babies and young children. Danger of suffocation!

Disposing of your old appliance

Electrical and electronic appliances contain many valuable materials. They also contain certain materials, compounds, and components which were essential for their correct functioning and safety. These could be hazardous to human health and to the environment if disposed of with general waste or if handled incorrectly. Please do not, therefore, dispose of your old appliance with your household waste.



Take care not to damage your refrigeration appliance before or during disposal in an authorised, environmentally friendly manner.
This is to ensure that refrigerant in the cooling circuit and oil in the compressor is contained, and will not leak into the environment.

Please dispose of it at your local community waste collection/recycling centre for electrical and electronic appliances, or contact Miele. You are also responsible for deleting any personal data that may be stored on the appliance prior to disposal. You should remove any old batteries which are not securely enclosed by the appliance and remove any lamps without destroying them, where this is possible. These must be taken to a suitable collection point where they can be handed in free of charge. Please ensure that your old appliance presents no danger to children while being stored awaiting disposal.

Installation location

⚠ Risk of damage due to high humidity.

In environments with high humidity, condensation can build up on external refrigeration appliance panels.

This condensate can cause corrosion on external appliance panels.

Install the refrigeration appliance in a dry and/or air-conditioned room with sufficient ventilation.

After installation, please make sure that the appliance door(s) closes/ close properly and that the specified ventilation gaps are adhered to.

⚠ Fire hazard and risk of damage from appliances that give off heat.

Appliances that give off heat can catch fire and set fire to the refrigeration appliance.

Do not place appliances which give off heat, such as mini-ovens, double burner cooktops or toasters on the refrigeration appliance.

⚠ Fire risk and danger of damage from open flames!

Open flames can set fire to the refrigeration appliance.

Keep open flames (e.g. a candle) away from the refrigeration appliance.

This appliance should be installed in a dry, well-ventilated room.

When deciding on the installation site, please bear in mind that your refrigeration appliance will use more energy if installed near to a heater, a cooker or other appliance that gives off heat.
Avoid direct sunlight.
The higher the ambient temperature, the longer the compressor runs and the higher the energy consumption is.

When installing the refrigeration appliance, please note the following:

- The mains socket must not be located directly behind the appliance and should be easily accessible.
- The mains plug and mains connection cable must not touch the rear of the refrigeration appliance as they could be damaged by vibrations from the appliance.
- Do not plug in other appliances into sockets behind this appliance.
- During installation of the refrigeration appliance, make sure that the mains connection cable does not get trapped or damaged.
- Do not position or operate multi-socket adapters, distributor strips or other electronic devices (such as halogen transformers) at the rear of the appliance.
- The floor at the installation site must be horizontal and level and must be as high as the surrounding floor.

Climate range

This refrigeration appliance is designed for use within specific ambient temperatures (climate range). Do not use it in ambient temperatures for which it is not designed. The climate class is stated on the data plate inside the refrigeration appliance.

Climate range	Ambient temperature
SN	10 to 32 °C
N	16 to 32 °C
ST	16 to 38 °C
T	16 to 43 °C
SN-ST	10 to 38 °C
SN-T	10 to 43 °C

A lower ambient temperature leads to the compressor switching off for longer periods. This can cause the internal temperature in the appliance to rise with the risk of food deteriorating and going off.

Ventilation requirements

⚠ Risk of fire and damage due to insufficient ventilation!

If the appliance is not ventilated sufficiently, the compressor will run more frequently and for longer periods. This will result in increased energy consumption and a higher operating temperature of the compressor. This, in turn, can result in damage to the compressor.

Please ensure that there is adequate ventilation around the appliance.

It is essential to observe the required ventilation gaps.

The ventilation gaps must not be covered or blocked in any way.

They must also be cleaned on a regular basis to remove dust.

Air at the back of the refrigeration appliance gets warm. Sufficient space for proper ventilation must therefore be ensured (see “Installation - Appliance dimensions”).

Installing multiple refrigeration appliances

⚠ Risk of damage due to condensation on the external appliance panels.

In environments with high humidity, condensation can build up between the external refrigeration appliance panels, which can cause corrosion.

Do **not** place different refrigeration appliances **directly** next to one another.

A distance of at least 70 mm must be maintained between the refrigeration appliances.

Side-by-side installation

Your refrigerator can be installed to the right of another freezer as it is equipped with an integrated heater in the left-hand side panel (see “Appliance dimensions”).

The freezer must also be equipped with an integrated heater in the right-hand side panel.

Depending on the model, the appropriate side-by-side installation kit will be provided with the freezer. The accompanying installation instructions describe how to install the refrigeration appliances next to each other.

Useful tip: Please contact Miele for information on which combinations are suitable for your appliance.

Changing the door hinging

Please note that the hinging must not be changed if this appliance is going to be installed side by side with another refrigeration appliance.

⚠ Danger of injury and damage when changing the door hinging!

There is an increased danger of injury and damage if the door hinging is installed by a single person.

Always change the door hinging with the help of a second person.

The appliance is supplied with right-hand hinging. If left-hand hinging is required, the hinges must be changed (see accompanying installation instructions).

Fitting the supplied wall spacers

The wall spacers supplied must be used in order to achieve declared energy consumption values and to prevent the build-up of condensation at high ambient temperatures. The refrigeration appliance depth is increased by approx. 15 mm for appliances with wall spacers fitted.

If the wall spacers are not used, the functionality of the refrigeration appliance is not affected. However, energy consumption is slightly increased with less distance between the appliance and the wall.

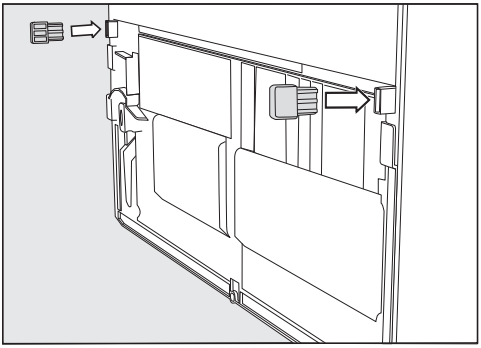

■ Fit the wall spacers onto the back of the refrigeration appliance on the bottom left and right.

Fitting the insect protection grilles supplied

The insect protection grilles protect the refrigeration appliance from the ingress of small insects and ensure the correct functioning of the appliance.

⚠ Risk of injury and damage while fitting the insect protection grilles.

The refrigeration appliance may fall over while being tilted. There is therefore an increased risk of injury and damage!

The refrigeration appliance must be tilted and secured from falling by two people.

Before fitting the insect protection grille, please ensure the following:

- The refrigeration appliance is switched off.
- The refrigeration appliance is empty.
- The refrigeration appliance must be tilted and secured from falling by two people.

- With the assistance of a second person, tilt the refrigeration appliance back slightly.

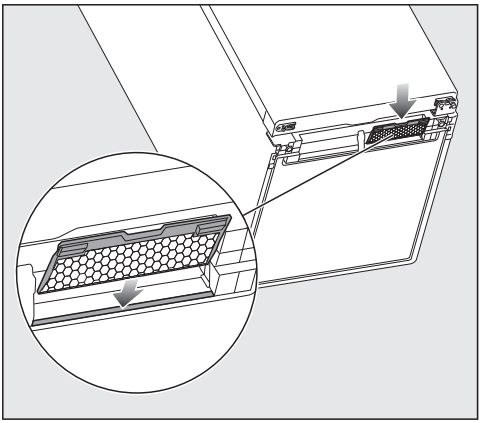

- Place the rear edge of the insect protection grille in the rear channel of the opening.

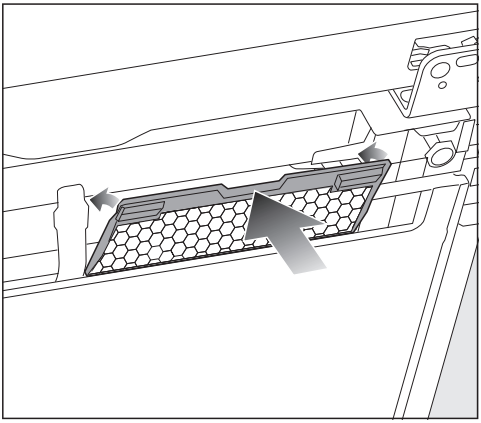

- Then raise the front edge of the insect protection grille so that clicks into place.
- Fit the second insect protection grille in the same way.
- Place the refrigeration appliance back in an upright position.

Installation

⚠ Risk of injury and damage due to the refrigeration appliance tipping over.

There is an increased risk of injury and damage if the refrigeration appliance is installed by a single person.

Two people are required for installing the refrigeration appliance.

⚠ Risk of damage to the appliance door caused by impact.

The appliance door could hit the wall of the room resulting in damage to the door.

Fit the door opening angle limiter supplied before the refrigeration appliance is installed.

Protect the appliance door by fitting a felt stopper, for example, to the wall of the room.

⚠ Risk of damaging the floor.

Moving the refrigeration appliance can cause damage to the floor.

Move the appliance carefully on floors that are sensitive to scratching.

For easier installation, there are transport handles on the back at the top and transport wheels underneath the refrigeration appliance.

Useful tip: The appliance must be empty when it is installed.

- Prepare the appliance for installation as close as possible to its intended installation location.

- Connect the appliance to the electricity supply as described in "Electrical connection".
- Move the appliance carefully to its intended installation location.
- Position the refrigeration appliance with the wall spacers (if fitted) or the back of the appliance close to the wall.

Aligning the appliance

⚠ Risk of damage and danger of injury due to the appliance door swinging open or the refrigeration appliance tipping over.
If the additional adjustable foot on the hinge plate at the bottom is not resting firmly on the floor, the appliance door may swing open or the refrigeration appliance can tip over.
Use the open spanner supplied with the appliance to unscrew the adjustable foot until it is resting on the floor.
Then unscrew it by a further quarter turn.

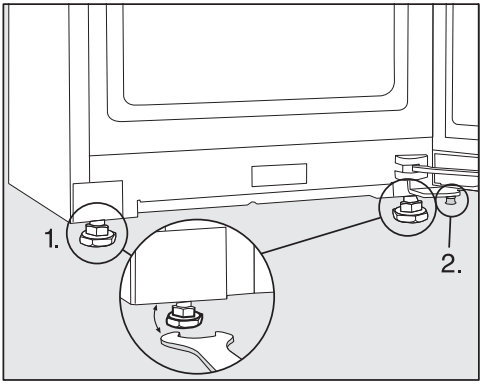

- Use a spirit level and the open spanner supplied to align the refrigeration appliance and support the appliance door.

1. Adjust the front adjustable feet.
2. Unscrew the additional adjustable foot until it is touching the floor. Then unscrew it by a further quarter turn.

Integrating the refrigeration appliance in a run of kitchen units

The refrigeration appliance can be surrounded by kitchen units.

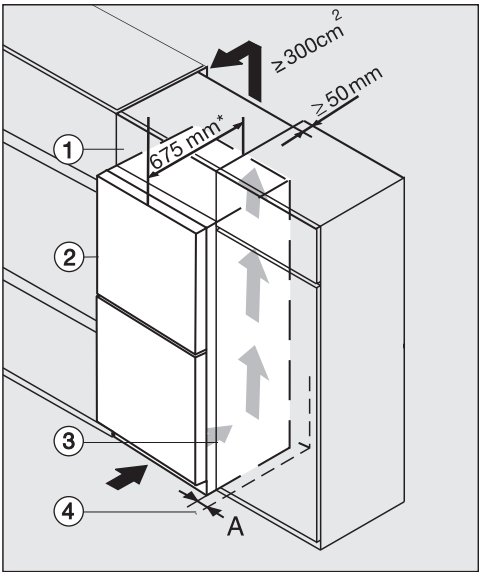

K(S)/FN(S)/KFN 4xxx X **edst/cs, bst**
① Top box
② Refrigeration appliance, door depth = 75 mm
③ Kitchen unit
④ Wall
A = 25 mm (with recessed grip)/60 mm (with handle)

* The appliance depth is increased by approx. 15 mm for appliances with wall spacers fitted.

⚠ Risk of fire and damage due to insufficient ventilation!

If the appliance is not ventilated sufficiently, the compressor will run more frequently and for longer periods. This will result in increased energy consumption and a higher operating temperature of the compressor. This, in turn, can result in damage to the compressor.

Please ensure that there is adequate ventilation around the appliance.

It is essential to observe the required ventilation gaps.

The ventilation gaps must not be covered or blocked in any way.

They must also be cleaned on a regular basis to remove dust.

The larger the ventilation gap, the more economically the compressor will work.

Installation

■ Install the refrigeration appliance next to the kitchen unit.

- The appliance front must protrude in front of furniture fronts by at least the door depth. This enables the door to be opened and shut without being obstructed.
- When installed next to a wall ④, a distance (**A**) must be maintained on the hinge side between the wall ④ and the refrigeration appliance ②.
- To match the height of the rest of the kitchen units, the refrigeration appliance can be fitted with a suitable top box ①.

  A ventilation duct of at least 50 mm depth must be provided across the whole width of the top box.

  The ventilation gap under the ceiling must be at least 300 cm^2 to ensure that the warm air can escape unhindered.

Appliance dimensions

Installation dimensions/View from above

KS 4783 ... edt/cs, KS 4783 ... bst

All dimensions are given in mm.

The refrigeration appliance will function correctly if the specified ventilation cross-sections are kept clear.

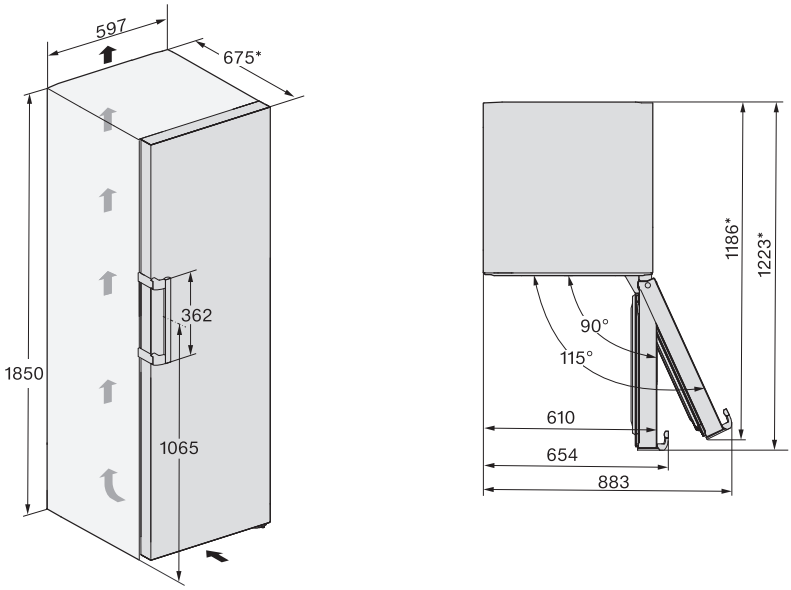

* Dimensions without wall spacers fitted. Appliance depth is increased by 15 mm with the wall spacers supplied fitted.

Installation

Connections

KS 4783 ... edt/cs, KS 4783 ... bst

All dimensions are given in mm.

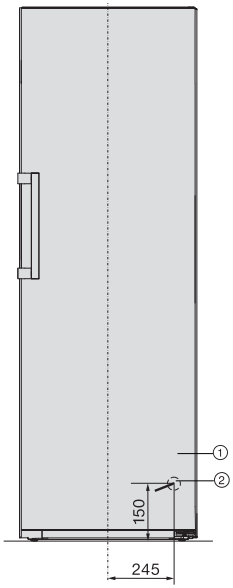

① Front view

② Mains connection cable, length = 2,000 mm
A longer mains connection cable is available from Miele.

Installation dimensions/View from above

FNS 4782 ... edt/cs + KS 4783 ... edt/cs, FNS 4782 ... bst + KS 4783 ... bst

For more information, see “Installing multiple refrigeration appliances – Side-by-side installation” and the installation instructions supplied with the side-by-side installation kit.

All dimensions are given in mm.

The refrigeration appliances will function correctly if the specified ventilation cross-sections are kept clear.

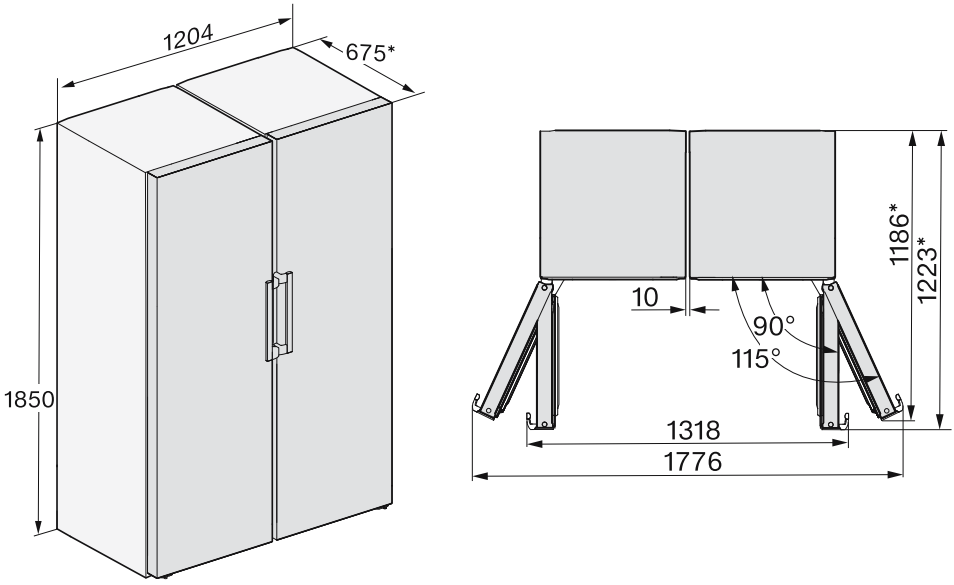

* Dimensions without wall spacers fitted. Appliance depth is increased by 15 mm with the wall spacers supplied fitted.

Electrical connection

The refrigeration appliance must only be connected to an earthed socket using the connection cable supplied.

The socket should be easily accessible after the refrigeration appliance has been installed. If the socket is not easily accessible, ensure that a suitable means of disconnection is provided on the installation side for each pole.

⚠ Risk of fire from overheating.
Connecting the appliance to a multi-socket plug adapter or to an extension lead can overload the cable.
For safety reasons, do not use an extension cable or multi-socket adapter.

All electrical work must be carried out by a suitably qualified and competent person in strict accordance with national and local safety regulations.

For safety reasons, we recommend using a suitable residual current device (RCD) in the relevant electrical installation for connecting the refrigeration appliance.

If the mains connection cable is damaged, it must only be replaced with a specific mains connection cable of the same type (available from Miele).

The data plate indicates the nominal power consumption and the connection data. Compare this information with the data of the on-site electrical connection. If in any doubt, consult a qualified electrician.

Temporary or permanent operation with a self-sufficient or non-mains synchronous energy supply system (e.g. isolated networks, back-up systems) is possible. A requirement for the operation is that the energy supply system complies with all current local and national requirements that apply to stand-alone, solar and/or battery systems.
The protective measures provided in the domestic installation and in this Miele product must also be assured in their function and operation in isolated operation or in non-mains synchronous operation, or replaced with equivalent measures in the installation.

Connecting the appliance

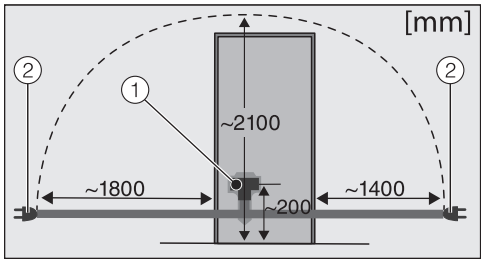

Back of the refrigeration appliance
① Appliance plug connector
② Mains plug

- Plug the appliance plug connector into the appliance socket.

Make sure that the plug connector has locked into position correctly.

- Insert the mains plug of the appliance into the socket and switch it on.

The appliance is now connected to the electricity supply.

How to save energy:

Installation location

The refrigeration appliance has to cool more often at higher ambient temperatures and consumes more energy in the process. Therefore, you should:

- Install the refrigeration appliance in a well-ventilated room.
- Do not install the refrigeration appliance near to a heat source (heater element, cooker).
- Protect the refrigeration appliance from direct sunlight.
- Ensure an ideal ambient temperature of 20 °C.
- Clean the ventilation gaps on a regular basis to remove any dust.

Temperature setting

The colder the temperature, the higher the energy consumption. The following settings are recommended:

- 4 to 5 °C in the refrigerator section.

Use

Energy consumption is increased by heat input and impeded air circulation. Therefore, you should:

- Only open the appliance door(s) when necessary and for as short a time as possible. Arrange the food in such a way that makes it easy to find in the appliance.
- Always close the appliance door(s) properly after opening them.
- Allow hot food and drinks to cool down before placing them in the refrigeration appliance.
- Store food well packaged or covered.
- Do not overfill the compartments to allow air to circulate.
- Place frozen food in the refrigerator section to defrost.
- Keep drawers and shelves arranged as they were when the appliance was delivered.
- Use the wall spacers. The wall spacers on the back of your refrigeration appliance are designed to ensure that the declared energy consumption is achieved.

Appliance overview

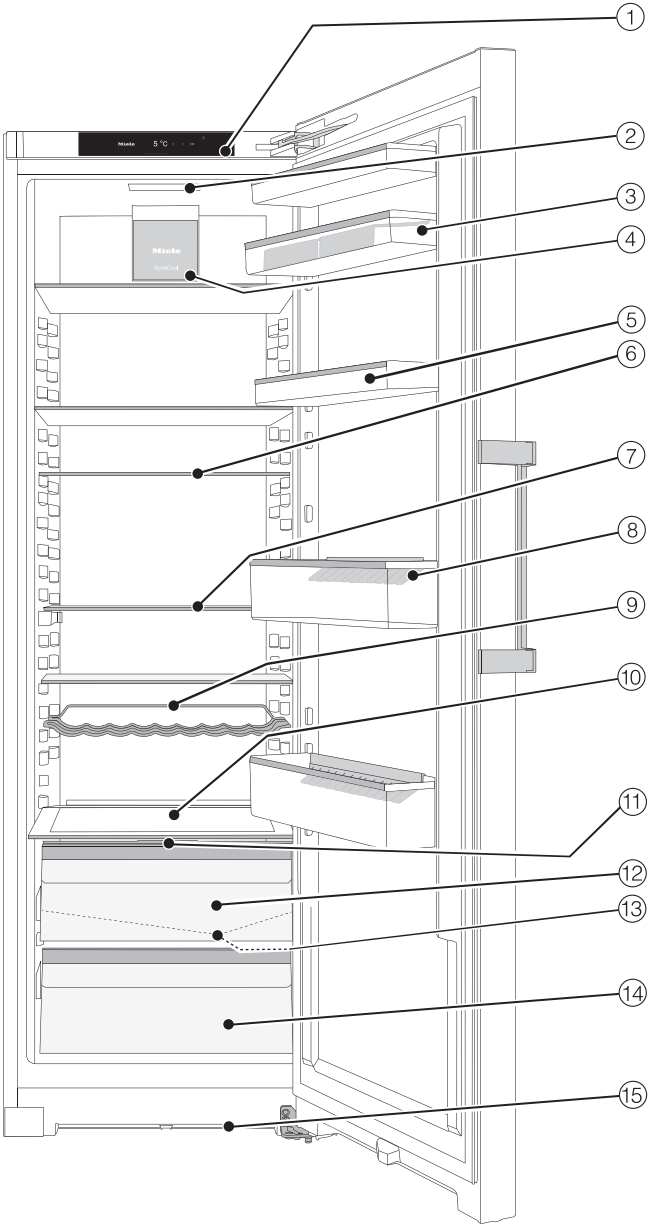

Picture shows an example of an appliance model.

① Display
② Interior lighting
③ Shelf with egg tray in the appliance door
④ Fan
⑤ Door shelves
⑥ Adjustable shelf
⑦ Split shelf (FlexiBoard)
⑧ Bottle shelf with bottle holder
⑨ Flexible bottle rack
⑩ Space for a baking tray (XL interior)
⑪ Compartment cover for setting the humidity level in the DailyFresh drawer
⑫ DailyFresh drawer for vegetables (with moisture adjustment)
⑬ Condensate channel and drain hole
⑭ DailyFresh drawer for fruit
⑮ Ventilation gap

Guide to the appliance

Control panel with start display

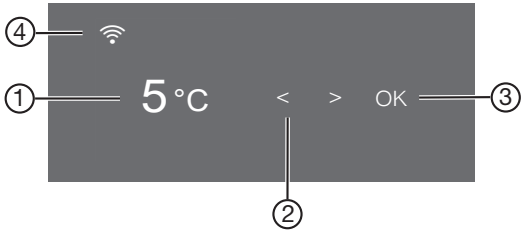

① Temperature display for the refrigerator section

② Sensors for selecting a setting

③ *OK* sensor for confirming a selection and accessing Settings mode ⚙

④ Display for Miele@home connection status (depending on model)
(only visible when the Miele@home function has been set up)

Settings mode ⚙

In Settings mode, you can select the following appliance functions and alter their settings to some extent:

Symbol	Function	Factory default setting
	Switching the Party mode function on or off (see “Selecting further settings”)	Off
	Switching the Holiday mode function on or off (see “Selecting further settings”)	Off
/	Switching the lock function on or off (see “Selecting further settings”)	(Off)
	Switching off the refrigeration appliance	—
	Switching the Sabbath mode function on or off (see “Selecting further settings”)	Off

	Calling up information on the Sabbath mode function (see “Selecting further settings”)	—
	Changing the time before the door alarm is triggered (see “Selecting further settings”)	1:00
(depending on model)	Setting up the Miele@home function for the first time, activating and deactivating Wi-Fi, or resetting the network configuration (see “Selecting further settings”)	APP
/	Switching the keypad tone on or off	On
/	Changing the volume of the alarms and buzzers or switching them off entirely (see “Selecting further settings”)	On /Level 5
	Changing the display brightness (see “Selecting further settings”)	Level 4
°C / °F	Changing the temperature unit (°Celsius or °Fahrenheit)	°C
	Switching the Demo mode function off (only visible when switched on) (see “Selecting further settings”)	Off
	Resetting to default settings (see “Selecting further settings”)	—
	Call up information (model identifier and serial number) about your refrigeration appliance (see “Selecting further settings”)	—
	Switching on the reminder to change the charcoal filter (see “Optional accessories”) (see “Selecting further settings”)	Off
	Switching Cleaning mode on or off (see “Cleaning and care” and “Selecting further settings”)	Off

Selecting the desired function in Settings mode ⚙

- Touch the *OK* sensor on the control panel.

🌡 appears in the display.

- Use the < or > sensor to scroll to the ⚙ symbol.
- Touch *OK*.
- Select the function you want using the < or > sensor.
- Touch *OK* to select the function you want.

When the function is **switched on**, a dot appears in the upper corner of the display •.

- Touch *OK* to deselect a selected function.

When the function is **switched off**, the dot in the upper corner of the display goes out.

Exiting Settings mode ⚙

- Use the < or > sensor to scroll to the ⮌ symbol.
- Touch *OK*.
- Use the < or > sensor to scroll to the ⮌ symbol and touch *OK*.
- **Alternatively**:
  Wait approx. 15 seconds after the last press of a sensor.
  Settings mode is then exited automatically.

Adjusting the interior fittings

Moving the door/bottle shelf

Only move the door/bottle shelves in the appliance door when they are empty.

- Push the door/bottle shelf upwards, then remove it by pulling it forwards.
- Refit the door/bottle shelf at the required height.

Clipping the egg trays on

- Clip the egg trays onto the rear edge of the door shelf.

Adjusting or removing the bottle holder

The non-slip fins of the bottle holder make bottles more secure when you open and close the appliance door.

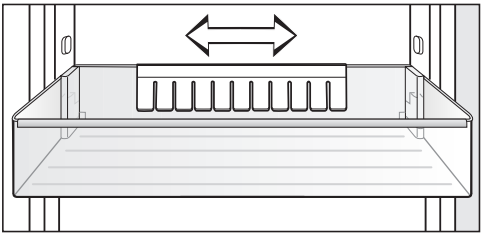

The bottle holder can be moved to the left or right to create more room for drink cartons.

The bottle holder can be removed completely, e.g. for cleaning:

- Pull the bottle holder up to remove it.

Moving the adjustable shelves

The shelves can be adjusted according to the height of the food.

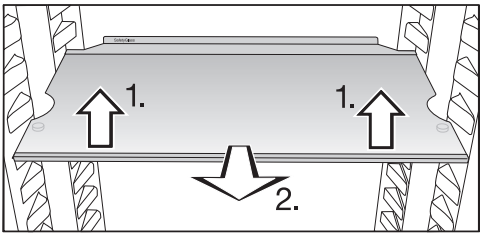

- Raise the shelf slightly at the front and pull it forwards a little.
- Lift it until the notches at the side are in line with the shelf supports. The shelf can then be raised or lowered to the required level.
- Push the shelf in.

Stoppers prevent the shelves from being dislodged by mistake.

The raised edge on the protective strip at the back must face upwards to prevent food from touching the back wall of the appliance and freezing to it.

Moving the split shelf

To accommodate tall items such as bottles or large containers, the front section of the split shelf slides underneath the rear section.

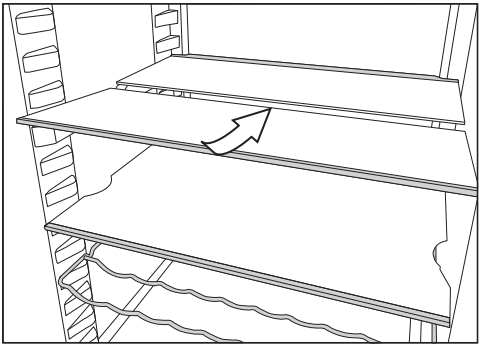

- Lift up the front section of the glass shelf slightly at the front and slide it carefully underneath the rear section.

Moving split shelves

The split shelf can be moved to a different location inside the appliance.

- Take both sections of the glass shelf out of the appliance.

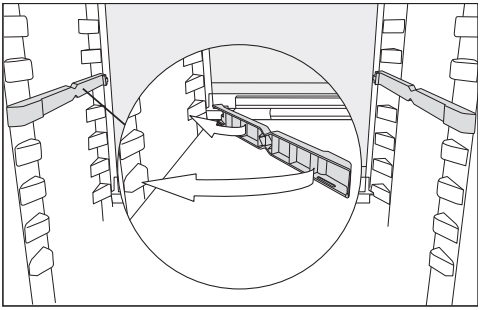

- Attach the two adapters to the support ribs on the left and right at the desired height.

The section with the raised edge must be fitted at the back.

Adjusting the bottle rack

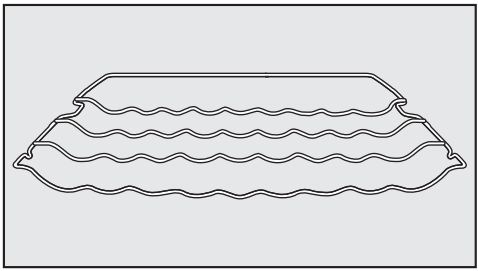

The bottle rack can be placed on different levels in the appliance.

- Raise the rack and pull it forwards slightly until the notch at the side is in line with the shelf support. It can then be raised or lowered to the required level.

The stop bar at the back must face upwards to prevent the bottles from touching the back wall.

The bottle rack has stoppers at the sides to prevent it from being pulled out unintentionally.

Space for a baking tray

A baking tray can be placed above the drawers. The baking tray can be no more than 466 mm wide, 386 mm deep and 50 mm high.

■ Open the appliance door as far as it will go.

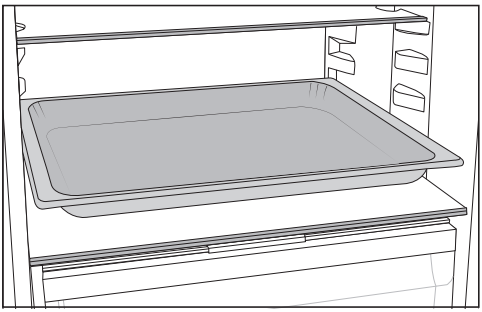

■ Place the baking tray on the dividing plate.

Useful tip: Let the baking tray cool down to room temperature before putting it in the refrigerator section.

Moving the charcoal filters

KKF-FF charcoal filters with holder (Active AirClean) are available as optional accessories (see “Optional accessories”).

When you are storing very strong smelling food (e.g. very ripe cheese):

- Place the holder with the charcoal filters on the shelf where this food is kept.
- Change the charcoal filters sooner if necessary.
- Use more charcoal filters (with holders) in the refrigeration appliance.

The holder for the charcoal filters sits on the protective strip at the back of the shelf.

■ To move the charcoal filters, pull the holder upwards to remove it from the protective strip.

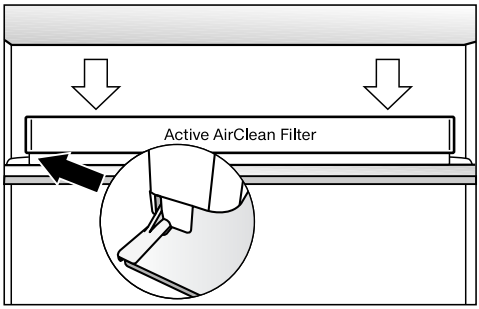

■ Refit it on the protective strip of the shelf you wish to use it on.

Accessories supplied

Flexible bottle rack

Egg tray

Bottle holder

Door opening angle limiter

Depending on the model

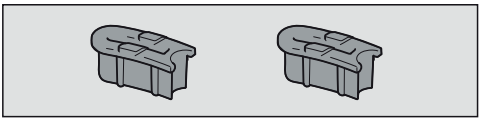

The door hinges are set at the factory to enable the door to be opened up to 115°. If the appliance door hits an adjacent wall when opened, for example, the opening angle can be limited to 90°.

Insect protection grille (depending on model)

Optional accessories

A range of useful Miele accessories and care products is available for your appliance.

Miele all purpose microfibre cloth

Light soiling and fingerprints on stainless steel fronts, control panels and furniture can be easily removed with this microfibre cloth.

KKF-FF (Active AirClean) charcoal filter with holder

Charcoal filters neutralise unpleasant odours in the refrigerator section for improved air quality.

KKF-RF replacement charcoal filters (Active AirClean)

Replacement filters to fit the holder are available. We recommend replacing the charcoal filters every 6 months.

Flexible bottle rack

For a description, see “Guide to the appliance – Adjusting the interior fittings”.

Organisation box

The organisation box makes it easier to sort the food in the refrigerator section drawer in a clear manner.

Depending on the model, you may need to remove the entire drawer to insert and remove the organisation box.

Optional accessories can be ordered from the Miele webshop. They can also be ordered directly from Miele (see end of this booklet for contact details).

Before using for the first time

- Remove all packaging material and protective film.
- Clean the inside of the appliance and the accessories (see “Cleaning and care”).

Connecting the appliance

- Connect the appliance to the electricity supply as described in "Electrical connection".

Miele will then appear in the appliance display, followed by ⏻.

Switching on the appliance

- Open the appliance door.
- Touch the *OK* sensor on the control panel.

The appliance will start to cool and the interior lighting will come on when the door is opened.

The refrigeration appliance will adjust to the preset temperature.

To enable the temperature to get sufficiently cold inside the refrigeration appliance, allow the appliance to run for a few hours. Do not place food in the refrigeration appliance until it has reached the preset temperature.

Switching off the appliance

- Touch the *OK* sensor on the control panel.

🌡 appears in the display.

- Touch *OK*.
- Use the < sensor to scroll to the ⏻ symbol.
- Touch *OK*.

⏻ appears in the display.

The cooling and interior lighting are switched off.

Please note: the refrigeration appliance is not disconnected from the power supply when it is switched off.

Switching off for longer periods of time

If, during a long absence, the refrigeration appliance is switched off but not cleaned and the door is left shut, there is a danger of mould building up inside the appliance.
It is essential to clean the refrigeration appliance if it is not going to be used for a long time.

If the appliance is not going to be used for a longer period of time, observe the following:

- Switch the appliance off.
- Switch off at the wall and withdraw the plug from the socket, or switch off the mains circuit breaker.
- Clean the refrigeration appliance and leave the door ajar to air the appliance and avoid odours building up inside.

It is very important to set the correct temperature to ensure the shelf life of food. Reducing the temperature reduces the growth rate of microorganisms. Food does not spoil as quickly.

The temperature in the appliance will rise:

- the more often the door is opened and the longer it is kept open.
- the more food is stored in it.
- the warmer the food is which is being put into it.
- the higher the ambient temperature surrounding the refrigeration appliance. This refrigeration appliance is designed for use within specific ambient temperatures (climate range). Do not use it in ambient temperatures for which it is not designed.

... in the refrigerator section

We recommend a temperature of **4 °C** in the refrigerator section.

Temperature display

In normal operation, the temperature display shows the **current mean temperature** in the refrigerator.

Depending on the ambient temperature and the temperature setting, it can take the appliance a few hours to reach the temperature required and for this temperature to then be shown constantly in the display.

Setting the temperature

- Touch the *OK* sensor on the control panel.

🌡 appears in the display.

- Touch *OK*.
- Use the < and > sensors to change the temperature.
- Touch *OK*.

The temperature display will then change back to the current temperature in the refrigeration appliance.

Possible temperature settings

- Refrigerator section: 2 to 9 °C

If you change the temperature setting:

- Check the temperature display after a few hours. It will take this long for an accurate reading to be given.

- Wait for approx. 6 hours if the refrigeration appliance is not very full.
- Wait for approx. 24 hours if the refrigeration appliance is full.

If, after this time, the temperature is still too high or too low:

- Adjust the temperature again.

SuperCool ❄

When switched on, the SuperCool function ❄ can be used to rapidly reduce the temperature in the **refrigerator section** to its lowest setting (depending on the ambient temperature). The refrigeration appliance will work at full power and lower the temperature. Select this function for the rapid chilling of large amounts of fresh food or drink.

When the SuperCool function ❄ is switched on, the appliance may make more noise than usual.

The SuperCool function ❄ should be switched on immediately before placing food or drinks in the refrigerator section.

The SuperCool function ❄ will switch itself off automatically after approx. 12 hours. The appliance will then run at normal power again.

Useful tip: To save energy, you can manually switch off the SuperCool function ❄ once food and drinks are sufficiently chilled.

Switching SuperCool ❄ on and off

- Touch the *OK* sensor on the control panel.

🌡 appears in the display.

- Touch *OK*.
- Use the < sensor to scroll to the ❄ symbol.
- Touch *OK*.

When the SuperCool function ❄ is **switched on**, a dot appears in the upper corner of the display •.

DynaCool

When the DynaCool function is not switched on, the natural circulation of air in the appliance will cause different temperature zones in the fridge, as the cold, heavy air will sink to the lowest section of the appliance. Make use of the different temperature zones when placing food in the refrigerator (see "Storing food in the refrigerator section").
However, if you are storing a large amount of similar food in the refrigerator at any one time, e.g. after your weekly shop, it is a good idea to switch on DynaCool. This way you can distribute the temperature on all the adjustable shelves inside the appliance more evenly so that all the food in the refrigerator section will be chilled to about the same degree.
The temperature can be set as usual with the temperature control.

Also switch on the DynaCool function when:

- the ambient temperature is high (above approx. 35 °C)
- the humidity levels are high (e.g. in the summer)

The fan will always switch on automatically when the compressor switches on.

Useful tip: As the energy consumption increases when DynaCool is switched on, you should switch the DynaCool function off again under normal conditions.

To save energy, the fan switches off automatically when the door is open.

Switching DynaCool on and off

- Touch the *OK* sensor on the control panel.

appears in the display.

- Touch *OK*.
- Use the < sensor to scroll to the symbol.
- Touch *OK*.

When the DynaCool function is **switched on**, a dot appears in the upper corner of the display •.

Explanation of the different settings

Only the settings that require further explanation are described below.

The door alarm and other warnings are automatically suppressed when you are in Settings mode ⚙.

Party mode

The Party mode function is particularly recommended for the rapid chilling of large amounts of fresh food or drink.

Useful tip: Switch on the Party mode function approx. 4 hours before placing food and drinks in the appliance.

When Party mode is switched on, the DynaCool and SuperCool functions are switched on automatically.

Party mode cannot be switched on if Holiday mode is switched on.

The Party mode function will switch itself off automatically after approx. 24 hours. However, you can switch the Party mode function off early at any time.

Holiday mode

The Holiday mode function is useful when you go on holiday, for example, if you do not wish to switch off the refrigerator section completely or do not need a high degree of cooling.

If Holiday mode is switched on, this will be indicated in the start display.

The refrigerator section is regulated to a temperature of 15 °C. In this way, the refrigerator section remains in operation whilst saving energy.

Food which does not go off quickly can be stored in the refrigeration appliance for some time at this moderate refrigerator temperature. Energy consumption is lower than in normal operation.
This also prevents the build-up of odours and mould, which can occur if the refrigerator section is switched off and the appliance door is closed.

⚠ Health risk due to consumption of spoiled food.

The shelf life and quality of food in the refrigerator section may deteriorate if the temperature remains above 4 °C for an extended period.

Only ever switch on the Holiday mode function for a limited period.

Do not store any temperature-sensitive food which goes off easily such as fruit, vegetables, fish, meat and dairy products during this time.

Switching the lock function 🔒/🔓 on

When the lock function is switched on, it protects the refrigeration appliance from being switched off unintentionally and being adjusted unintentionally by unauthorised persons, e.g. children.

- In Settings mode ⚙, use the < or > sensor to scroll to the 🔓 symbol.
- Touch *OK*.

When the safety lock function 🔒 is switched on, a dot appears in the upper corner of the display •.

- Close the appliance door. The safety lock function 🔒 will now be activated.

Deactivating the lock function 🔒/🔓 temporarily

If you want to adjust the temperature, for example, you can deactivate the safety lock function temporarily:

- Touch *OK*.

🔒 will appear in the display.

- Touch the *OK* sensor for approx. 6 seconds.

🌡 will appear in the display.

- Touch *OK*.
- Now select the required settings.
- Touch *OK*.

Closing the appliance door will reactivate the safety lock function 🔒.

Switching the lock function 🔒/🔓 off completely

- Touch *OK*.

🔒 will appear in the display.

- Touch the *OK* sensor for approx. 6 seconds.

🌡 will appear in the display.

- Use the < or > sensor to scroll to the ⚙ symbol.
- Touch *OK*.
- Use the < or > sensor to scroll to the 🔒 symbol.
- Touch *OK*.

When the safety lock function is switched off, 🔓 appears in the display.

Sabbath mode

The appliance offers a Sabbath mode for the purpose of religious observance.

If Sabbath mode is switched on, this will be indicated in the start display.

The display switches off after 3 seconds.

When Sabbath mode is switched on, you cannot adjust any settings on your refrigeration appliance.

Ensure that the door is properly closed, as visual and audible alarms are switched off.

The Sabbath mode function will switch off automatically after approx. 120 hours.

When Sabbath mode is switched on, the following are deactivated:

- The interior lighting when the door is opened.
- All audible and visual signals.
- The temperature display.
- An active Wi-Fi connection.

All other functions switched on previously remain activated.

⚠ Health risk due to consumption of spoiled food.

As power failures are not indicated while Sabbath mode is active, food may be exposed to increased temperatures for a certain period of time. This shortens the shelf life of the food.

If there is a power failure during Sabbath mode , check the quality of the food.

Switching Sabbath mode on

■ In Settings mode, use the < or > sensor to scroll to the symbol.

■ Touch *OK*.

When the Sabbath mode function is switched on, a dot appears in the upper corner of the display •.

The display switches off after 3 seconds.

■ Close the appliance door.

Switching Sabbath mode off

■ Touch the *OK* sensor.

will appear in the display.

■ Touch *OK*.

When the Sabbath mode function is switched on, a dot appears in the upper corner of the display •.

■ Touch *OK*.

When the Sabbath mode function is switched off, the dot in the upper corner of the display goes out.

Information on Sabbath mode

This product is certified by Star-K, an international institute for kosher certification.
You can find the Star-K certification version here.

Changing the time before the door alarm is triggered

You can set how quickly the door alarm should sound after an appliance door has been opened.

- In Settings mode, use the < or > sensor to scroll to the symbol.
- Touch *OK*.
- Use the < and > sensors to set the time you want between 30 seconds and 3 minutes: 30 seconds.
- Touch *OK*.

Miele@home

Your refrigeration appliance is equipped with an integrated Wi-Fi module.

Networking is deactivated at the factory.

To use this feature, you will need:

- a Wi-Fi network
- the Miele App
- a Miele user account. You can create a user account via the Miele App.

The Miele App will guide you as you connect your refrigeration appliance to your home Wi-Fi network.

Once the refrigeration appliance is connected to your Wi-Fi network, you can use the App to carry out the following activities, for example:

- Call up information on the operating status of your refrigeration appliance
- Change the settings on your refrigeration appliance

Connecting your refrigeration appliance unit to your Wi-Fi network will increase energy consumption, even when the appliance is switched off.

Make sure that the signal of your Wi-Fi network is sufficiently strong in the area where you want to set up your refrigeration appliance.

Availability of the Wi-Fi connection

The Wi-Fi connection shares a frequency range with other appliances (including microwave ovens and remote control toys). This may result in sporadic or even complete connection failures. Therefore, a constant availability of featured functions cannot be guaranteed.

Miele@home availability

The ability to use the Miele App depends on the availability of the Miele@home service in your country.

The Miele@home service is not available in every country.

For information about availability, please visit www.miele.com.

Miele App

You can download the Miele App from the Apple App Store® or the Google Play Store™ free of charge (only functional in selected countries).

Download on the App Store

ANDROID APP ON Google Play

Setting up Miele@home for the first time

- In Settings mode ⚙, use the < or > sensor to scroll to the @ symbol.
- Touch *OK*.
- Use the < and > sensors to select the connection method you wish to use (App or WPS).
- Touch *OK*.

After you have successfully logged in, ᯤ will appear in the start display.

If a connection could not be created, ⊗ will appear.

Start the process again.

Deactivating or activating the Wi-Fi connection

- In Settings mode ⚙, use the < or > sensor to scroll to the ⓐ symbol.
- Touch *OK*.

If the Wi-Fi is deactivated, the ⚠ symbol will appear in the display.

- To reactivate the Wi-Fi connection, touch *OK*.

If the Wi-Fi is activated, the ᯤ symbol and a dot appear in the upper corner of the display •.

When the Wi-Fi connection is active, the ᯤ symbol appears in the start display.

Resetting the network configuration

- In Settings mode ⚙, use the < or > sensor to scroll to the ⓐ symbol.
- Touch *OK*.
- Use the > sensor to scroll to the ⟲ symbol.
- Touch *OK*.
- Use the > sensor to scroll to the × symbol.
- Touch *OK*.

All entered settings and values for Miele@home are reset to the default settings.

The Wi-Fi connection has been deactivated. ᯤ will go out in the start display.

Reset the network configuration if you are disposing of or selling your refrigeration appliance, or if you are putting a used refrigeration appliance into operation. All personal data is removed from the refrigeration appliance. This will also ensure that a previous owner is no longer able to access the appliance.

Changing the volume of the alarms and buzzers 🔊 / 🔇

You can change the volume of the alarms and buzzers (e.g. in the event of a door alarm or a fault message). Alternatively, you can switch the alarms and buzzers off if you find them annoying.

- In Settings mode ⚙, use the < or > sensor to scroll to the 🔊 symbol.
- Touch *OK*.
- Use the < and > sensors to select the volume you want for alarms and buzzers.
- Touch *OK*.

When the alarms and buzzers are switched off, 🔇 will appear.

Adjusting the display brightness ☼

You can adjust the display brightness to the lighting conditions in the room.

- In Settings mode ⚙, use the < or > sensor to scroll to the ☼ symbol.
- Touch *OK*.
- Use the < and > sensors to select the display brightness you want.
- Touch *OK*.

Switching off Demo mode

Demo mode allows the refrigeration appliance to be presented in the showroom without the cooling system being switched on. Do not activate this setting for domestic use.

If Demo mode has been switched on as a default setting, will appear in the display when the refrigeration appliance is switched on.

- Touch the *OK* sensor on the control panel.

Miele will appear initially in the display, followed by the start screen.

- Touch *OK*.
- In Settings mode ⚙, use the < or > sensor to scroll to the symbol.
- Touch *OK*.

After Demo mode has been switched off, the refrigeration appliance shuts down and must be switched on again.

Resetting the settings to their factory default settings

All settings made on the refrigeration appliance will be reset to the factory default settings (for settings, see “Guide to the appliance”).

- In Settings mode ⚙, use the < or > sensor to scroll to the symbol.
- Touch *OK*.
- Use the > sensor to scroll to the symbol.
- Touch *OK*.

The refrigeration appliance shuts down and must be switched on again.

Information ℹ

Appliance data (model number and serial number) is shown in the display.

Keep this appliance data to hand:

- For integrating the refrigeration appliance into your Wi-Fi network (see “Selecting further settings – Miele@home”) (depending on model).
- When reporting an appliance fault to Miele (see “Service”).

Selecting further settings

Charcoal filter change indicator

After inserting the charcoal filter (optional accessory), you must activate the charcoal filter change indicator in Settings mode.

The charcoal filter change indicator in the start display will remind you to replace the charcoal filter approx. every 6 months (see “Cleaning and care – Replacing the charcoal filters”).

Cleaning mode

Cleaning mode makes it easier to clean the refrigerator section (see “Cleaning and care”). The interior lighting remains switched on, even though the refrigerator section is switched off. The buzzer will stop and the symbols in the display will also go out.

If Cleaning mode is switched on, this will be indicated in the start display.

After cleaning, Cleaning mode must be switched off. If the appliance door is closed for more than 10 minutes, Cleaning mode switches itself off automatically.

The refrigeration appliance is equipped with a warning system to avoid increased energy consumption and food becoming warm if the appliance door is left open.

If the appliance door is left open for a longer period of time,  will appear in the temperature display. An alarm tone also sounds.

You can change the time before the door alarm is triggered. However, the door alarm can also be switched off (see “Selecting further settings”).

The alarm will stop and will go out in the display as soon as the door is closed.

Switching the door alarm off early

You can switch the alarm off early if you wish.

- Touch *OK*.

The alarm will stop and the symbol will go out.

If the appliance door is not closed, the alarm will sound again after 3 minutes.

If there is insufficient air circulation, the cooling performance will decrease and energy consumption will increase.

To allow air to circulate efficiently, do not pack food too closely together in the appliance.

Do not cover the fan in the rear wall of the appliance.

Different storage zones

Due to the natural air circulation, there are different temperature zones in the refrigerator section.

Cold, heavy air sinks to the lowest section of the refrigerator section. Make use of the different zones when placing food in the appliance.

This appliance has dynamic cooling, which helps to keep an even temperature when the fan is running. The difference between the various temperature zones is therefore less pronounced.

Warmest area

The warmest area is located in the top section of the main storage area and the door. Use this for storing butter so that it remains spreadable and for cheese so that it retains its flavour.

Coldest area

The coldest area in the refrigerator section is directly above the DailyFresh drawer and at the back of the appliance.

A temperature setting of 4 °C combined with appropriate hygiene measures delays the propagation of bacteria, e.g. salmonella and listeria, which can lead to serious food poisoning.

Therefore, you should use these areas to store all delicate and highly perishable food, including:

- fish, meat, poultry
- sausage products, ready meals
- dishes or baked goods containing eggs or cream
- fresh dough, cake mixtures, pizza or quiche dough
- soft cheese and other dairy products
- hummus, vegetable spreads, plant-based cream cheese substitutes
- pre-packed vegetables
- other fresh food (with a label stating it should be kept at a temperature of approx. 4 °C)

Useful tip: Store food in such a way that it does not touch the rear wall of the refrigerator section. Otherwise it could freeze to the rear wall.

Food which is not suitable for storage in the refrigerator

Not all food is suitable for refrigeration at temperatures below 5 °C because it is sensitive to cold.

Foods which are sensitive to cold include:

- Pineapples, avocados, bananas, pomegranates, mangoes, melons, papayas, passionfruit and citrus fruits such as lemons, oranges, mandarines, grapefruits
- Fruit (which is not yet ripe)
- Eggplants, cucumbers, potatoes, capsicums, tomatoes, zucchini
- Hard cheeses, e.g. Parmesan, mountain cheese

Notes on buying food

The freshness of the food when it is first placed in the appliance is the most important factor for how long it stays fresh.
Take into account the use-by date and the correct storage temperature.
Time out of the refrigerator, e.g. transporting food in a warm car, should be kept to a minimum.

Storing food in the refrigerator section

Storing food correctly

Ensure that food stored in the refrigerator section is in packaging or covered properly (some exceptions apply in the DailyFresh drawer). This will prevent food odours from affecting other food, stop food from drying out, and also prevent any cross-contamination of bacteria. This is particularly important when storing meat products. Make sure that food such as raw meat and fish in particular does not come into contact with other food.

By ensuring that the temperature settings are correct and by taking appropriate hygiene measures, you can prolong the storage life of your food considerably. This prevents food waste.

Protein rich food

Please note that foods rich in protein deteriorate faster than others. Shellfish, for example, deteriorates faster than fish, and fish deteriorates faster than meat.

The DailyFresh drawer provides good storage conditions for fruit and vegetables.

The humidity level in the DailyFresh drawer can be regulated to suit the food being stored. Food retains its own moisture if stored at a higher humidity and does not dry out as quickly. The temperature is approximately equivalent to the temperature in the refrigerator section.

Remember that the freshness of the food when first placed in the appliance is the most important factor in determining how long it will stay fresh.

Adjusting the humidity level in the DailyFresh drawer for fruit and vegetables

The moisture level greatly depends on the type and quantity of food being stored, if stored unwrapped.
If the quantity of food being stored in this compartment is small, the humidity level may be too low.

Useful tip: If you are only storing a small amount of food, wrap it in airtight packaging.

Selecting low humidity ◊

The appliance is delivered with increased humidity and the compartment cover pushed backwards ◊◊◊.

Only change this default setting if the humidity level in the DailyFresh drawer is too high.

- Open the DailyFresh drawer.

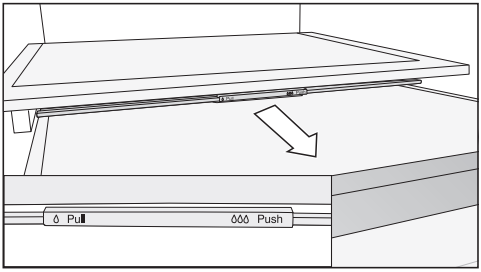

- Pull the compartment cover forwards as far as it will go.

The compartment cover is open and the humidity decreases ◊.

Selecting increased humidity ◊◊◊

- Open the DailyFresh drawer.

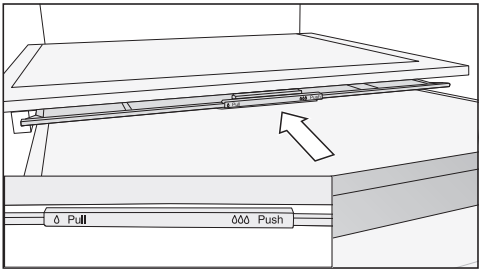

- Slide the compartment cover backwards as far as it will go.

The compartment cover is closed and the humidity remains in the compartment ◊◊◊.

Storing food in the DailyFresh drawer

Observe the following tips if you find that food you have stored does not keep well (e.g. food becomes limp or wilts after only being stored for a short time):

- Only place fresh food in the appliance. The initial condition of the food is crucial to maintaining freshness.
- Clean the DailyFresh drawer before storing food in it.
- Dry the surface of very moist food before storing it.
- Do not store food which is sensitive to cold in the DailyFresh drawer (see “Storing food in the refrigerator section – Food which is not suitable for storage in the refrigerator”).
- Set the compartment cover to the correct position for the food being stored (low humidity ◊ or humidity increased ◊◊◊).
- An increased humidity level ◊◊◊ in the humidity-controlled compartment is achieved with the moisture present in the food being stored if it is stored unwrapped. The more food stored in the compartment, the higher the humidity.
- If too much moisture collects in the compartment at the ◊◊◊ setting and the food is affected, dry the floor and place a rack or similar item in the compartment so that excess moisture can drip down. Alternatively, reduce the humidity ◊ by pulling the compartment cover forwards.
- If the humidity level is too low despite the ◊◊◊ setting, wrap the food in airtight packaging.

Refrigerator section and DailyFresh drawer

The refrigerator section and the DailyFresh drawer defrost automatically.

Condensate and frost can build up on the back wall of the refrigerator section and the DailyFresh drawer whilst the compressor is running. You do not need to remove this.

The condensate drains through a channel and drain hole into an evaporation system at the back of the refrigeration appliance. The warmth generated by the compressor causes the condensate to evaporate automatically.

Keep the condensate channel and drain hole clean to enable this. Condensate must be able to drain away unhindered at all times.

The data plate located inside the refrigeration appliance must not be removed. It contains information which is required in the event of a fault.

Do not let water get into the electronic unit or the lighting.

⚠ Risk of damage due to moisture ingress.
The steam from a steam cleaning appliance can damage plastic parts and electrical components.
Do not use a steam cleaning appliance to clean the refrigeration appliance.

Cleaning water must not get into the drain hole.

Cleaning agents

Cleaning and conditioning agents used in the interior of the refrigeration appliance must be food safe.

To avoid damaging the surfaces of your appliance, **do not use:**

- cleaning agents containing soda, ammonia, acid or chloride
- cleaning agents containing descaling agents
- abrasive cleaning agents, e.g. powder cleaners and cream cleaners
- solvent-based cleaning agents
- stainless steel cleaning agents
- dishwasher cleaners
- oven sprays
- glass-cleaning agents
- hard, abrasive sponges and brushes, e.g. pot scourers
- dirt eraser sponges
- sharp metal scrapers

We recommend using lukewarm water with a little washing-up liquid to clean the appliance.

Preparing the refrigeration appliance for cleaning

Useful tip: Switch Cleaning mode on. The cooling system in the refrigerator section is switched off, but the interior lighting remains switched on.

- In Settings mode, use the < or > sensor to scroll to the symbol.
- Touch *OK*.

When Cleaning mode is switched on, a dot appears in the upper corner of the display •.

If Cleaning mode is switched on, this will be indicated in the start display.

The cooling system in the refrigerator section is switched off, but the interior lighting remains switched on.

- Take any food out of the refrigeration appliance and store it in a cool place.
- Take out any removable accessories for cleaning (see “Removing and dismantling accessories for cleaning”).

Cleaning the interior of the machine

Clean the appliance regularly, or at least once a month.

If soiling is left on for any length of time, it may become impossible to remove under certain circumstances.
Surfaces may suffer discolouration or damage.
Remove any soiling immediately.

- Clean the **interior** with a clean sponge, lukewarm water and a little washing-up liquid.
- After cleaning, wipe with a damp cloth and dry with a soft cloth.
- Clean the condensate channel and drain hole frequently using a cotton swab or similar item to ensure that condensate can drain away freely.
- Leave the door open to air the refrigeration appliance sufficiently for a short while and to prevent odour build-up.

Cleaning accessories by hand or in the dishwasher

The following components must be cleaned **by hand** only:

- the stainless steel-look trim
- the protective strips at the back of the adjustable shelves
- Adjustable shelf with printing
- All drawers and compartment covers (these vary depending on model)
- the insect protection grilles (supplied depending on model)
- the flexible bottle rack
- Organisation box (available as an optional accessory)

The following components are **dishwasher-safe**:

⚠ Risk of damage due to high dishwasher temperatures.
Parts of the refrigeration appliance may become unusable, e.g. deform, if they are washed in the dishwasher at more than 55 °C.
For dishwasher-safe components, always select dishwasher programs with a maximum temperature of 55 °C.

Contact with natural dyes from carrots, tomatoes, and ketchup, etc. may discolour the plastic parts in the dishwasher. This discolouration does not affect the stability of the parts.

- Bottle holder, egg tray.
- the door and bottle shelves in the appliance door (without stainless steel-look trim)
- Adapters for the split shelf
- The adjustable shelves (with the trim removed and without the printing)
- The holder for the charcoal filter (optional accessory)

Removing and dismantling accessories for cleaning

Dismantling the door shelf/bottle shelf

Remove the trim in stainless steel-look before cleaning the door shelf/bottle shelf in the dishwasher.

To remove the trim, proceed as follows:

- Place the door shelf/bottle shelf on the worktop.
- Pull the trim off the shelf, beginning at one side.
- After cleaning the door shelf/bottle shelf, reattach the trim.

Dismantling an adjustable shelf

Remove the trim and the rear protective strip before cleaning the shelf. Proceed as follows:

- Place the shelf on a worktop covered with a soft material (e.g. a tea towel).

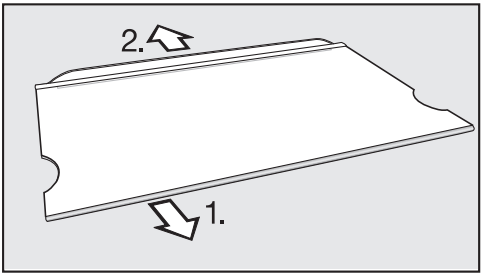

- Pull the trim off the shelf, beginning at one side.
- Pull the protective strip off.
- After cleaning the shelf, reattach the trim and the protective strip.

Removing the drawers from the refrigerator section

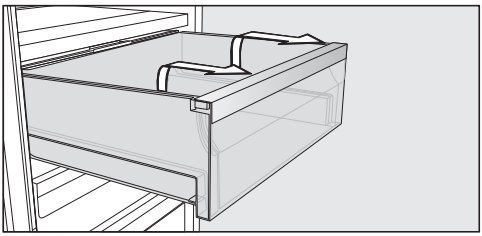

- Pull the drawer out as far as it will go.
- Holding the sides of the drawer at the back, lift it up and then forwards and out.

Push the telescopic runners back in again to avoid damaging them.

⚠ Risk of damage due to incorrect cleaning.
The telescopic runners contain a special lubricant which can be washed out during cleaning, damaging the runners.
Wipe the telescopic runners with a damp cloth to clean them.

Replacing the drawers

- Place the drawer on the fully extended telescopic runners.
- Push the drawer into the refrigeration appliance until it clicks into position.

Removing the dividing plate

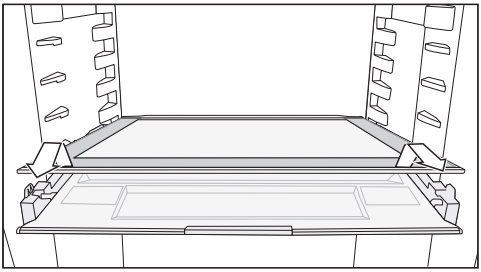

- Remove the dividing plate.
- After cleaning, slide the dividing plate back in again.

Removing the compartment cover

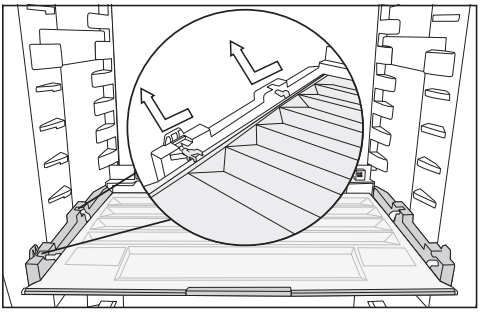

- Lift the cover at the front and pull it out.
- After cleaning, slide the compartment cover back in again.

Removing and cleaning the insect protection grilles

A build-up of dust will increase the energy consumption of the appliance.

The area in front of the insect protection grilles should be cleaned on a regular basis with a brush or vacuum cleaner (e.g. use the dusting brush for Miele vacuum cleaners).

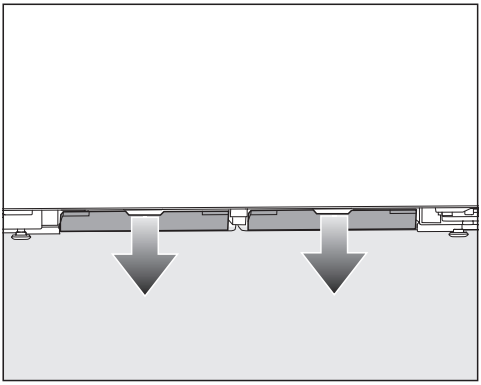

- Press down the lug in the middle of the insect protection grille until it unclips.
- Pull out the insect protection grille towards you.
- Remove the second insect protection grille.
- Remove any stubborn soiling with a damp cloth.
- Refit both insect protection grilles (see "Installation - Fitting the insect protection grilles supplied").

Replacing the charcoal filters (optional accessories)

Replace the charcoal filters in the holder every 6 months.

The ⊛ symbol in the start display reminds you that the charcoal filter needs to be changed.

Replacement KKF-RF charcoal filters can be obtained from Miele or the Miele online shop.

- Pull the charcoal filter holder upwards to remove it from the shelf.

When in position, the charcoal filters must not touch the back wall of the appliance as the moisture could cause them to stick to the back wall.

Insert the new charcoal filters into the holder far enough so that they do not protrude over the edge of the holder.

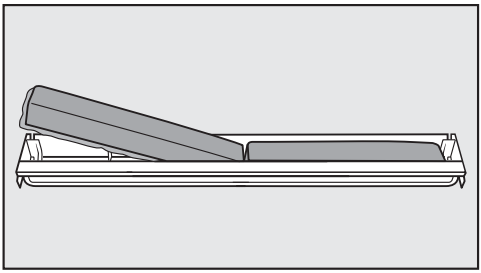

- Remove both charcoal filters and place the new filters with the surrounding edge pointing downwards in the holder.

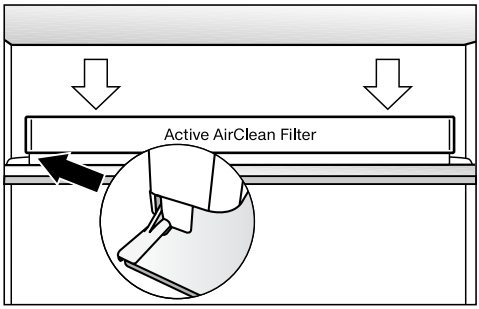

- Place the holder in the middle of the protective strip at the back of any adjustable shelf so that it clicks into position.
- Touch the *OK* sensor to confirm that the filters have been replaced.

The change charcoal filters indicator will go out and the counter is reset.

The ⊛ symbol will go out in the start display.

Cleaning the front of the appliance and the side panels

If soiling is left on for any length of time, it may become impossible to remove. Surfaces may suffer discolouration or damage.

Therefore it is best to remove soiling from the appliance doors and side panels immediately.

All surfaces are susceptible to scratching. Contact with unsuitable cleaning agents can alter or discolour the surfaces.

See the information on “Cleaning agents” at the beginning of this section.

- Clean the surfaces with a clean sponge and a solution of warm water and washing-up liquid. A clean, damp microfibre cloth without cleaning agent can also be used.
- After cleaning, wipe with clean water and dry with a soft cloth.

CleanSteel (edt/cs) – appliance front

⚠ Risk of damage due to incorrect cleaning.

The surface coating will be damaged.

Do not use a stainless steel cleaning agent on this surface.

The appliance front has a high quality, special finish. It is resistant to soiling and easy to clean.

Cleaning the door seal

⚠ Risk of damage due to incorrect cleaning.

If you treat the door seals with oils or grease, they can become porous.

Do not use any oils or grease on the door seals.

- The door seal should be cleaned regularly with clean water, and then wiped dry with a soft cloth.

Cleaning the ventilation gaps

A build-up of dust will increase the energy consumption of the appliance.

- The ventilation gaps should be cleaned on a regular basis with a brush or vacuum cleaner (you could use a Miele Vacuum Cleaner dusting brush, for example).

After cleaning

- Touch the *OK* sensor on the control panel.

will appear in the display.

- Touch *OK*.

When Cleaning mode is switched off, the dot in the upper corner of the display goes out.

- Use the < and > sensors to scroll to the ⮌ symbol and touch *OK*.

The refrigeration appliance will start cooling again.

- Refit all shelves and accessories in the appliance.
- Switch on the SuperCool function for a while so that the temperature inside the refrigeration appliance drops quickly.
- Place food in the refrigeration appliance as soon as it reaches the required coldness.
- Close the appliance door(s).

Problem solving guide

Many malfunctions and minor faults that can occur in daily operation can be corrected without contacting Miele. This will save you time and money because you will not need a service call.

You can find information on how to remedy faults yourself at www.miele.com/service.

Please note, however, that a call-out charge will be applied to unnecessary service visits where the problem could have been rectified as described in these operating instructions.

To prevent cold from escaping, avoid opening the appliance door until the fault has been corrected.

Problem	Possible cause and remedy
The refrigeration appliance is not getting cold and the interior lighting does not come on when the appliance door is opened.	The refrigeration appliance is not switched on and the ⏻ symbol is lit up in the display. ■ Switch the appliance on.
	The plug is not properly inserted into the socket or the socket is not switched on. ■ Insert the plug into the socket correctly and switch on. If the refrigeration appliance is switched off, ⏻ will appear in the display.
	The mains circuit breaker has tripped. There could be a fault with the refrigeration appliance, the household electrical wiring or another electrical appliance. ■ Contact a qualified electrician or Miele.
The compressor runs continuously.	This is not a fault. To save energy, the compressor runs at a lower speed when less cooling is required. This increases the running time of the compressor.
The compressor is switching on more frequently and for longer periods of time. The temperature in the appliance is too low.	The ventilation gaps are covered or have become too dusty. ■ Do not block the ventilation gaps. ■ Clean the dust from the ventilation gaps on a regular basis.
	The appliance door has been opened too frequently. A large amount of fresh food has been placed in the appliance. ■ Only open the door when necessary and for as short a time as possible.

Problem	Possible cause and remedy
	After a while, the temperature will return to normal by itself.
	The door is not properly closed. ■ Close the appliance door. After a while, the temperature will return to normal by itself.
	The ambient temperature is too high. The higher the ambient temperature, the longer the compressor runs. ■ See the information in "Installation - Installation location".
	The appliance was not properly installed in the niche. ■ Install the refrigeration appliance in the niche as described in the installation instructions supplied with it.
	The temperature setting is too low. ■ Correct the temperature setting.
	The SuperCool function ❄ is still switched on. ■ Switch off the SuperCool function ❄ earlier to save energy.
The compressor comes on less and less often and for shorter periods of time. The temperature in the appliance rises.	This is not a fault. The temperature is too high. ■ Correct the temperature setting. ■ Check the temperature again after 24 hours.
Ice or condensation has built up inside the refrigeration appliance. The appliance door may not close correctly.	The door seal has come out of its groove. ■ Check that the door seal is correctly seated in the groove.
	The door seal is damaged. ■ Check if the door seal is damaged.
The door seal is damaged and needs to be replaced.	No tools are required to change the door seal. ■ Change the door seal. A replacement is available from Miele.

Other problems

Problem	Possible cause and remedy
The floor of the refrigerator is wet.	The condensate drain hole is blocked. ■ Clean the condensate channel and drain hole.
There is no audible alarm even though the door has been open for a long time.	This is not a fault. The alarm has been switched off in Settings mode. If you want to switch the audible alarm back on again: ■ In Settings mode ⚙, use the < or > sensor to scroll to the 🔊 symbol. ■ Touch *OK*. ■ Use the < and > sensors to select the volume you want for alarms and buzzers. ■ Touch *OK*. When the alarms and buzzers are switched on, 🔊 will appear.

Messages in the display

Message	Possible cause and remedy
lights up in the display, the refrigeration appliance does not get cold even though the controls and the interior lighting are working.	Demo mode has been activated. ■ Touch *OK*. Miele will appear initially in the display, followed by the start screen. ■ Touch *OK*. ■ In Settings mode, use the < or > sensor to scroll to the symbol. ■ Touch *OK*. After Demo mode has been switched off, the refrigeration appliance shuts down and must be switched on again.
is lit up in the display and the refrigeration appliance cannot be used.	The Cleaning mode function is still switched on. ■ Touch the *OK* sensor on the control panel to switch off Cleaning mode. will appear in the display. ■ Touch *OK*. When Cleaning mode is switched off, the dot in the upper corner of the display goes out. ■ Use the < or > sensor to scroll to the symbol and touch *OK*. The refrigeration appliance will start cooling again.
Nothing is visible in the display. The display is dark.	Sabbath mode is switched on: the interior lighting is switched off and the refrigeration appliance is cooling down. ■ Touch *OK*. will appear in the display. ■ Touch *OK*. When the Sabbath mode function is switched on, a dot appears in the upper corner of the display •. ■ Touch *OK*. When the Sabbath mode function is switched off, the dot in the upper corner of the display goes out.

Problem solving guide

Message	Possible cause and remedy
is lit up in the display and the refrigeration appliance cannot be used.	The lock function has been activated. ■ Unlock the refrigeration appliance temporarily or switch the lock function off completely (see “Selecting further settings – Deactivating the lock function / temporarily/switching off completely”).
The symbol lights up in the start display and a buzzer also sounds.	The charcoal filter change indicator in the start display reminds you that the charcoal filter needs to be changed. ■ Replace the charcoal filter in the holder (see “Cleaning and care – Replacing the charcoal filters (optional accessories)”) and confirm that the charcoal filter has been replaced by touching the *OK* sensor. The symbol will go out in the start display.
⚠ **lights up in the display and a fault code F with numbers may appear. An alarm tone also sounds.**	There is a fault. ■ Switch the alarm off by touching *OK*. ■ Call Miele. To report the fault, you need the fault code and also the model identifier and serial number of your refrigeration appliance. You can access this information in the display. ■ Touch *OK*. The appliance data required will be shown in the display. ■ Touch *OK*. ■ To switch off the refrigeration appliance, use the < or > sensor to scroll to the ⏻ symbol. ■ To exit the information display, use the < or > sensor to scroll to the ⮌ symbol. ■ Touch *OK*.
	There is an appliance fault: this display always has priority over any settings which have just been selected. An appliance fault has priority over any current door and/or temperature alarms in the display.

Interior lighting

⚠ Risk of electric shock due to exposed, live electrical components!
When removing the lighting cover, there is a risk of coming into contact with live electrical components.
Do not remove the lighting cover. The LED lighting must only be repaired or replaced by a qualified technician.

⚠ Danger of injury from LED lighting.
This lighting corresponds to risk group RG 2. If the cover is defective, there is a risk of eye injury.
Do not look from a close range directly into the lighting with optical instruments (e.g. magnifying glass or similar).

Problem	Possible cause and remedy
The interior lighting is not working.	The refrigeration appliance is not switched on. ■ Switch the appliance on.
	Sabbath mode is switched on: the display is black and the refrigeration appliance is cooling. ■ Touch *OK*. will appear in the display. ■ Touch *OK*. When the Sabbath mode function is switched on, a dot appears in the upper corner of the display •. ■ Touch *OK*. When the Sabbath mode function is switched off, the dot in the upper corner of the display goes out.
	To avoid overheating, the interior lighting switches itself off automatically after approx. 15 minutes if the door is left open. If this is not the case, there is a fault. ■ Call Miele.
The interior lighting is pulsating.	This is not a fault. The door alarm has been activated and the interior lighting pulsates with the alarm.

Noises

The refrigeration appliance is producing various noises during operation.
If the cooling demand is low, the refrigeration appliance will conserve energy but operate for longer. The volume will be lower.
Food will be chilled faster if the cooling demand is high.
The volume will be higher.

Normal noises	What causes them
Brrrrr ...	A humming noise is made by the compressor. This noise can get louder for brief periods when the compressor switches on.
Blubb, blubb ...	A gurgling noise can be heard when refrigerant is circulating through the pipes.
Click ...	Clicking sounds occur whenever the thermostat switches the compressor on or off.
Crack ...	A cracking sound can be heard when materials expand inside the appliance.
Please bear in mind that the noise of the compressor and the coolant circulating in the system is unavoidable.	

Noises	Possible cause and remedy
Rattling, vibrating, clinking	The refrigeration appliance is uneven. Realign the appliance using a spirit level. Do so by raising or lowering the adjustable feet underneath the refrigeration appliance.
	The refrigeration appliance is touching another appliance or piece of furniture. Move it away.
	Drawers, baskets or shelves are jiggling or are stuck. Check all removable items and refit them correctly.
	Bottles or containers are touching. Separate them.

You can find information on how to remedy faults yourself and about Miele spare parts at www.miele.com/service.

Contact in case of fault

In the event of a fault which you cannot remedy yourself, please contact Miele.

You can book a Miele customer service call-out online at www.miele.com.au/service or www.miele.co.nz/service.

Contact information for Miele can be found at the end of this booklet.

Please quote the model and serial number of your appliance when contacting Miele. Both of these can be found on the data plate inside the refrigeration appliance or, depending on the model, in the settings mode under information i.

Warranty

The manufacturer's warranty for this appliance is 2 years.

For more information about country-specific warranty terms and conditions, please contact Miele.

Miele Australia Pty. Ltd.
ACN 005 635 398, ABN 96 005 635 398

Miele Head Office Melbourne:
Level 4, 141 Camberwell Road
Hawthorn East, VIC 3123
1300 464 353 (1300 4 MIELE)
info@miele.com.au
www.miele.com.au

Hong Kong, China
Miele (Hong Kong) Ltd.
41/F - 4101, Manhattan Place
23 Wang Tai Road, Kowloon Bay
Hong Kong
Tel.: (852) 2610 1025
Fax: (852) 3579 1404
E-mail: customerservices@miele.com.hk
Website: www.miele.hk

India
Miele India Pvt. Ltd.
1st Floor, Copia Corporate Suites,
Commercial Plot 9,
Mathura Road, Jasola,
New Delhi - 110025
E-mail: customercare@miele.in
Website: www.miele.in

Malaysia
Miele Sdn Bhd
Suite 12-2, Level 12
Menara Sapura Kencana Petroleum
Solaris Dutamas No. 1, Jalan Dutamas 1
50480 Kuala Lumpur, Malaysia
Phone: +603-6209-0288, Fax: +603-6205-3768

Miele New Zealand Ltd.
IRD 98 463 631

Head Office:
8 College Hill
Freemans Bay, Auckland 1011
0800 464 353 (0800 4 MIELE)
customercare@miele.co.nz
www.miele.co.nz

Singapore
Miele Pte. Ltd.
29 Media Circle
#11-04 ALICE@Mediapolis
Singapore 138565
Tel: +65 6735 1191, Fax: +65 6735 1161
E-mail: info@miele.com.sg
Internet: www.miele.sg

South Africa
Miele (Pty) Ltd
63 Peter Place, Bryanston 2194
P.O. Box 69434, Bryanston 2021
Tel.: (011) 875 9000, Fax: (011) 875 9035
E-mail: info@miele.co.za
Internet: www.miele.co.za

Thailand
Miele Appliances Ltd.
BHIRAJ TOWER at EmQuartier
43rd Floor Unit 4301-4303
689 Sukhumvit Road
North Klongton Sub-District
Vadhana District
Bangkok 10110, Thailand

Miele Global Headquarters Germany
Miele & Cie. KG, Carl-Miele-Straße 29, 33332 Gütersloh, Federal Republic of Germany

Miele

KS 4783 ...

en - AU, NZ

M.-Nr. 12 124 610 / 02