TRUFROST™

USER MANUAL

Ice Machine: IC-18BW

TABLE OF CONTENTS

IMPORTANT SAFETY INSTRUCTIONS……2
PREPARING YOUR ICE MAKER FOR USE
IMPORTANT SAFETY TIPS……3
GETTING TO KNOW YOUR UNIT……5
OPERATING PROCEDURES & MAINTENANCE………6
UNPACKING YOUR ICE MAKER……6
CONNECTING YOUR ICE MAKER……7
CLEANING AND MAINTAINING YOUR ICE MAKER……7
USING YOUR ICE MAKER……8
TROUBLESHOOTING……9
TECHNICAL PARAMETERS & CIRCUIT DIAGRAM……10

IMPORTANT SAFETY INSTRUCTIONS

Your safety and the safety of others are very important.

We have provided many important safety messages manual and your appliance. Always read and obey all safety messages.

This is the safety alert symbol: 

All safety messages will follow the safety alert symbol and the word “DANGER” or “WARNING”.

DANGER

WARNING

These words mean:

You can be killed or seriously injured if you don’t <u>immediate</u> follow instructions.

All safety messages will tell you what the potential hazard is, tell you how to reduce the chance of injury, and tell you what can happen if the instructions are not followed.

PREPARING YOUR ICE MAKER FOR USE

IMPORTANT SAFETY TIPS

When using electrical appliances, basic safety precautions should be followed to reduce the risk of fire, electric shock, and injury to persons or property. Read all instructions before using any appliance.

- Do not operate this, or any other appliance with a damaged cord.
  Connect to properly polarized outlets only. No other appliance should be plugged into the same outlet. Be sure that the plug is fully inserted into the receptacle.
- Do not run the power cord over carpeting or other heat insulators. Do not cover the cord. Keep cord away from traffic areas, and do not submerge in water.
- We do not recommend the use of an extension cord, as it may overheat and become a risk of fire. If you must use an extension cord, use 2mm^2 minimum size .
- Unplug the ice maker before cleaning or making any repairs or servicing.
- Exercise caution and use reasonable supervision when appliance is used near children.
- Do not use your ice-maker outdoors. Place the ice-maker away from direct sunlight and make sure that there is at least 4 inches of space between the back of your unit and wall. Keep a minimum distance of 4 inches on each side of your unit free.
- Do not use other liquid to make the ice-cube other than water.
- Do not clean your ice maker with flammable fluids. The fumes can create a fire hazard or explosion.
- Do not tip over.
- If the ice maker is brought in from outside in wintertime, give it a few hours to warm up to room temperature before plugging it in.

▪ If the supply cord is damaged, it must be replaced by the manufacturer or its service agent or a similarly qualified person in order to avoid a hazard.

▪ This ice maker must be positioned so that the plug is accessible .

▪ Disconnect the mains plug from the supply the supply socket when not in use, where supply connection is via mains plug.

WARNING: This appliance must be earthed.

- Do not store explosive substances such as aerosol cans with a flammable propellant in this appliance.
- This appliance is intended to be used in household and similar applications such as

– staff kitchen areas in shops, offices and other working environments;

– farm houses and by clients in hotels, motels and other residential type environments;

– bed and breakfast type environments;

– catering and similar non-retail applications.

-  Warning: Risk of fire/flammable materials used. Please according to local regulations regarding disposal of the appliance for its flammable blowing gas.
- WARNING: Keep ventilation openings, in the appliance enclosure or in the built-in structure, clear of obstruction.
- WANING: Do not damage the refrigerant circuit.
- WARNING: Do not use mechanical devices or other means to accelerate the defrosting process or ice harvesting process, other than those recommended by the manufacturer.
- WARNING: Do not use other type of electrical appliances inside the ice-maker.

IMPORTANT:

The wires in this mains lead are colored in accordance with the following code:

Green and yellow:	Grounding
Blue:	Neutral
Brown:	Live

To avoid a hazard due to instability of the appliance, it must be placed at a even or flat surface.

GETTING TO KNOW YOUR UNIT

UN

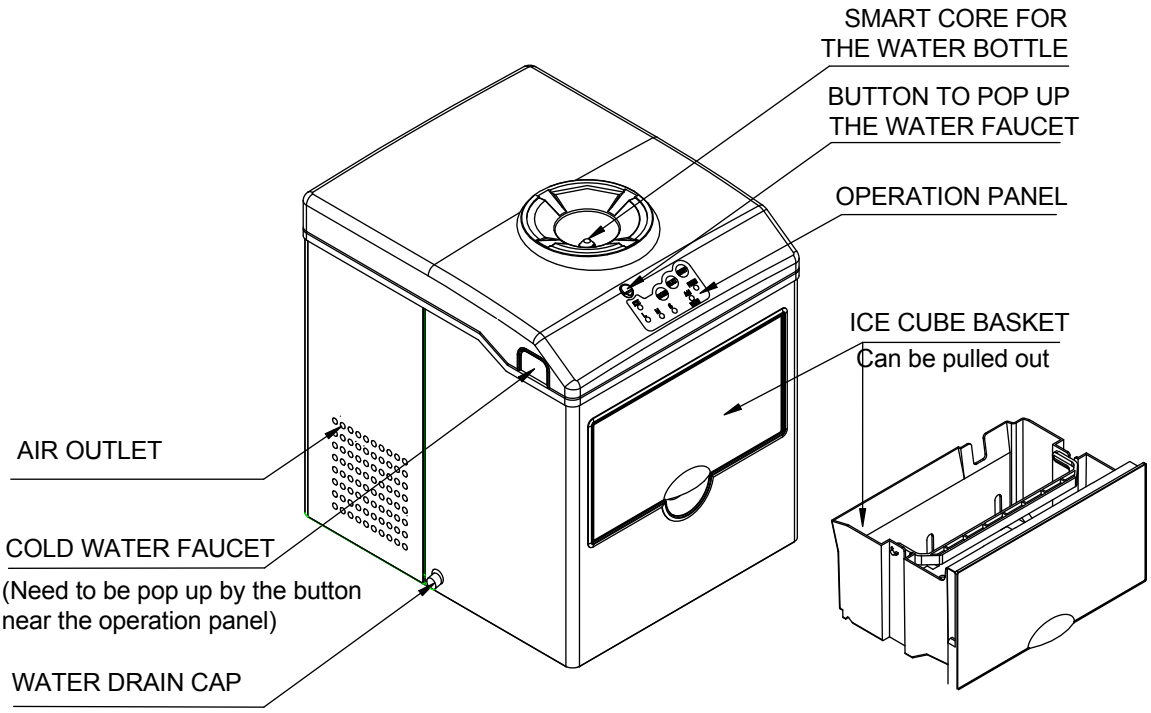

OPERATION PANEL

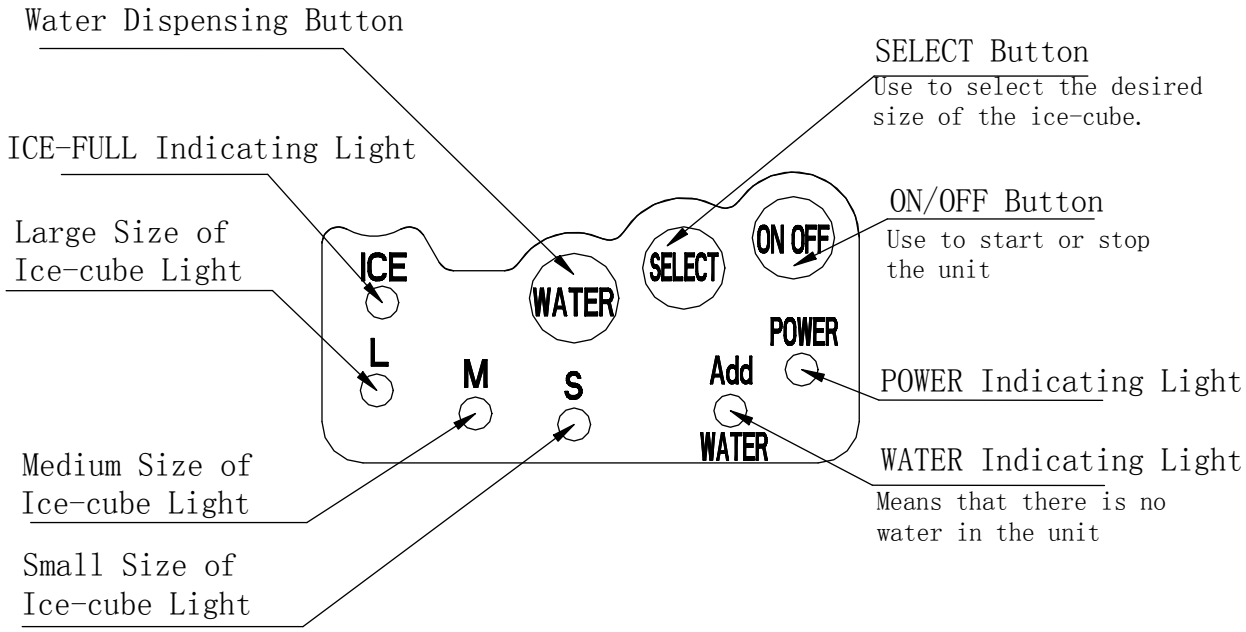

OPERATING PROCEDURES & MAINTENANCE

UNPACKING YOUR ICE MAKER

1. Remove the exterior and interior packaging. Check that ice scoop is included. If any parts are missing, please contact our customer service.
2. Clean the interior with lukewarm water and a soft cloth. Take out the ice basket and clean it .
3. Find a location for your ice maker that is protected from direct sunlight and other sources of heat (i.e.: stove, furnace, radiator). Place the ice maker on a level surface. Maker sure that there is at least 4 inches of space between the back and sides of your ice maker and the wall.
4. Allow one hour for the refrigerant fluid to settle before plugging ice maker in.
5. The appliance must be positioned so that the plug is accessible.
6. Before placing water bottle on the unit, be sure that the drain plug on the back is tightly fastened.
7. Hold the water bottle vertically and upside down (over the unit) and place the water bottle into the SMART CORE for the water bottle. Apply slightly pressure in order to pierce the bottle cap with the spigot. This unit accepts two, three or five gallon water bottle with pierceable sealed caps.

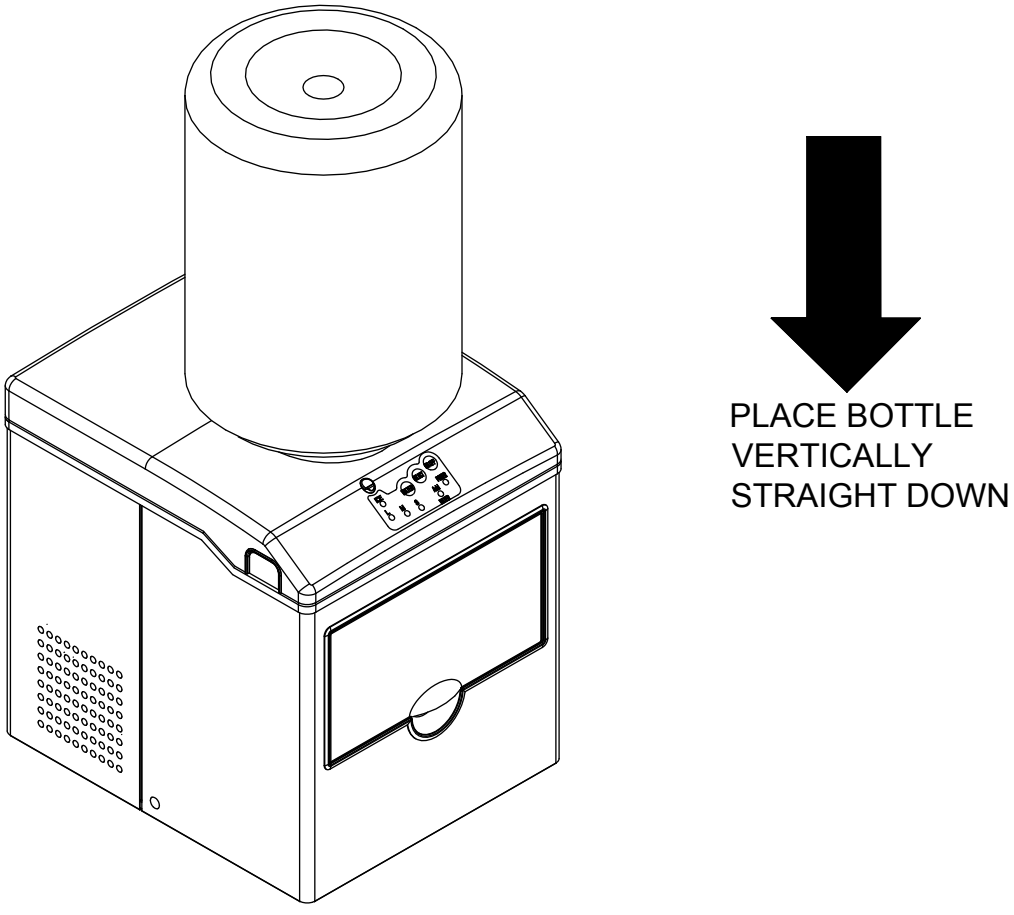

CONNECTING YOUR ICE MAKER

⚠ DANGER

*** Improper use of the grounded plug can result in the risk of electrical shock. If the power cord is damaged please call our customer service.**

1. This unit should be properly grounded for your safety. The power cord of this appliance is equipped with a three-prong plug which mates with standard three prong wall outlets to minimize the possibility of electric shock.
2. Plug your appliance into an exclusive, properly installed, grounded wall outlet. Do not under any circumstances, cut or remove the third (ground) prong from the power cord. Any questions concerning power and/or grounding should be directed toward a certified electrician.
3. This appliance requires a standard 220~240 volt, 50Hz electrical outlet with three-prong ground.

CLEANING AND MAINTAINING YOUR ICE MAKER

Before using your ice maker, it is strongly recommended to clean it thoroughly.

1. Take out the ice basket.
2. Clean the interior with diluted detergent, warm water and a soft cloth.
3. Then use the water to rinse the inside parts, and drain out the water by unplugging the drain cap on the side.
4. The outside of the ice maker should be cleaned regularly with a mild detergent solution and warm water.
5. Dry the interior and exterior with a soft cloth.
6. When the machine is not in use, open water drained cap to drain water completely from water reservoir.

USING YOUR ICE MAKER

MAKING THE ICE -CUBE

1. Press “ON/OFF” on the control panel to begin the ice making cycle.
2. Select the size of the ice cube by pressing the “Select” button.
3. The ice making cycle lasts 6 to 15 minutes, depending on the size of the ice cube selection and the ambient temperature. And during the extreme temperature, the lasting time maybe vary a lot.
4. If water pump can’t inject water, the ice maker will stop automatically, and the “ADD WATER” indicator will be on on the operation panel. Please check the water bottle and replace a new bottle full of water.
   Press “ON/OFF” button again to start the unit again.
   And if the new bottle full of water is replaced and the “ADD WATER” indicater is still on because of water pump not working properly, please check the two water filter:
   A. The water filter is located in the bottom of water tank, first check it is blocked or not. Otherwise clean it.
   B. The water filter is displayed in following figure. Realease the clipper and take down the water pipe, then take out the water filter and clean it, then install back and use the clipper to fasten the water pipe again.

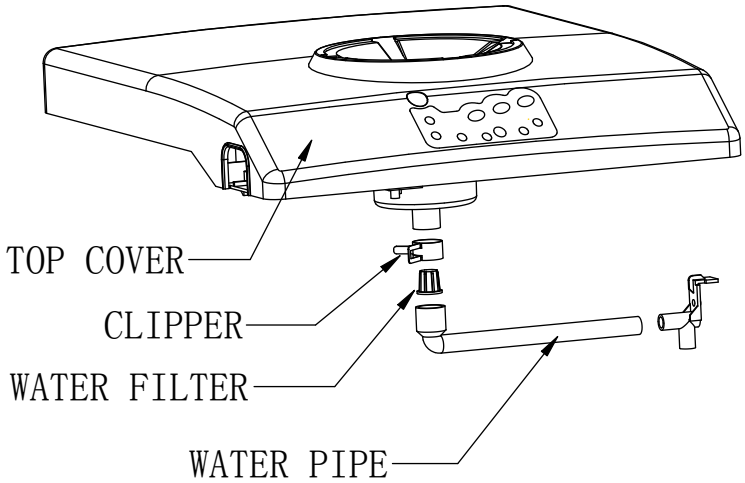

   Allow the refrigerant liquid inside the compressor at least 3 minutes to settle before restarting.
5. The ice maker automatically stops working when the ICE light on the operarion panel is on means that ice basket is full.

ENJOY THE COLD WATER

The cold water can be enjoyed only after the ice-making have worked for more than half hour.

1.Press the button to pop up the cold water faucet.

2.Press the “WATER” Water Dispensing Button on the operation button to dispense the cold water to your cup. Release pressing till your cup is full of the cold water.

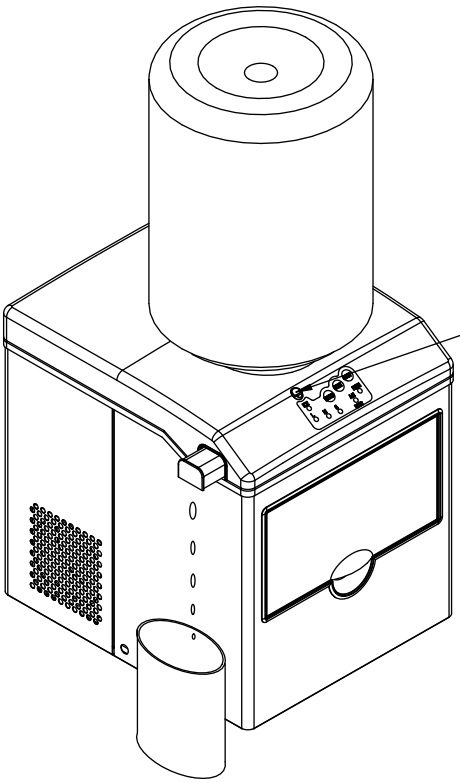

TROUBLESHOOTING

PROBLEM	POSSIBLE CAUSE	SOLUTION
“WATER” indicator is on.	Lack of Water.	Stop the ice maker, replace with a new bottle full of water, and then restart it.
	One of two water filter is blocked.	Check both of water filter and clean it.
“ICE” indicator is on.	The ice basket is full of the ice-cube.	Pull the ice basket and empty it.
Ice cubes stick together.	The ice cycle is too long.	Stop the ice maker, and restart it when the ice blocks melt. Select the small ice button.
	Water temperature in inner tank is too low.	Change the water in the inner Tank. Temperature of water is better set between 8−32˚C.
Ice making cycle is normal but no ice is made.	Ambient temperature or water temperature in inner tank is too high.	Please run the ice maker below 32˚C and pour colder water into tank.
	Refrigerant liquid leakage.	Verify by a qualified technician.
	Pipe in the cooling system is blocked.	Verify by a qualified technician.

TECHNICAL PARAMETERS & CIRCUIT DIAGRAM

TECHNICAL PARAMETERS

Model	IC – 18BW
Description	Ice maker using bottled water, with cold water dispensing function
Power Rating	220-240V~, 50Hz
Ice-making Rated Current	1.1A
Ice-harvest Rated Current	1.3A
Refrigerant	R290 /33g
Enclosure	Stainless steel
Dimension	357mm(W)*423mm(D)*452mm(H)
Net Weight	15Kg

CIRCUIT DIAGRAM

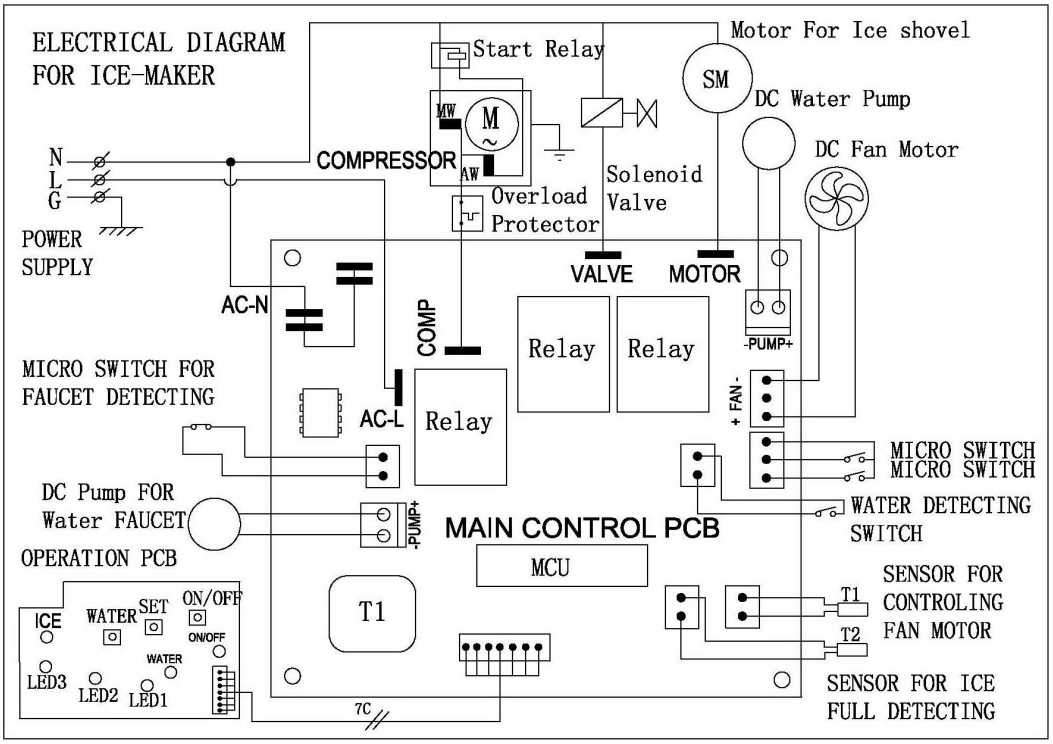

TRUFROST COOLING PRIVATE LIMITED

1214-1215, 12th Floor, Tower B, Emaar Digital Greens, Golf Course Extn. Road,
Sector 61, Gurugram – 122011 (India)

T. +91-124- 4246560 info@trufrost.com

www.trufrost.com