White-Westinghouse

Use & Care Manual

Top Mount

Refrigerator

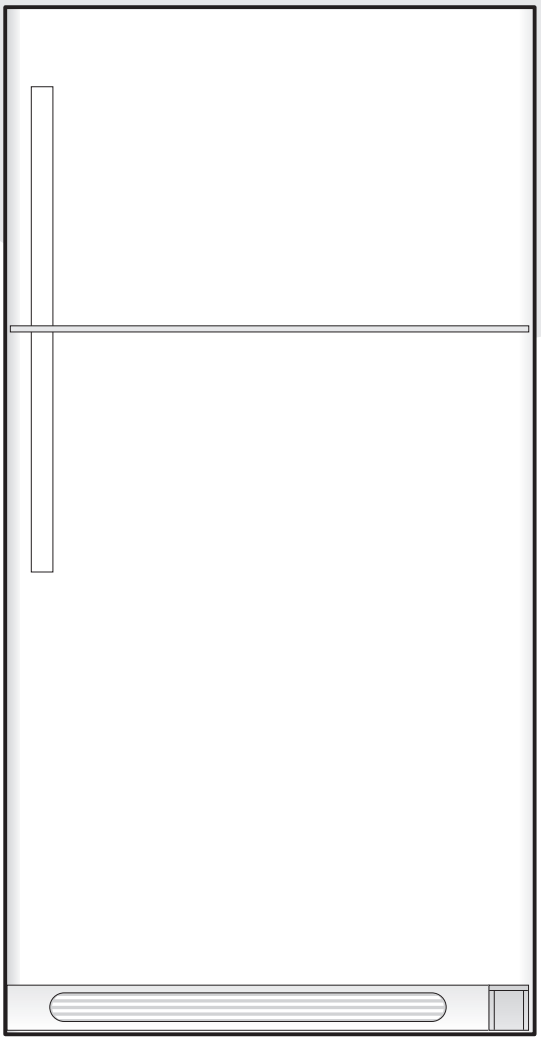

Important Safety Instructions..... 2
Installation..... 3
Connecting Water Supply 4
Door Removal Instructions..... 5
Temperature Controls 7
Ice Service..... 8
Normal Operating Sounds & Sights ... 9
Care and Cleaning..... 10
Warranty 11
Before you Call 12

READ AND SAVE THESE INSTRUCTIONS

P/N 241997501 (October 2008)

IMPORTANT SAFETY INSTRUCTIONS

IMPORTANT SAFETY INSTRUCTIONS

Safety Precautions

Do not attempt to install or operate your unit until you have read the safety precautions in this manual. Safety items throughout this manual are labeled with a Danger, Warning or Caution based on the risk type.

Definitions

This is the safety alert symbol. It is used to alert you to potential personal injury hazards. Obey all safety messages that follow this symbol to avoid possible injury or death.

DANGER

DANGER indicates an imminently hazardous situation which, if not avoided, will result in death or serious injury.

WARNING

WARNING indicates a potentially hazardous situation which, if not avoided, could result in death or serious injury.

CAUTION

CAUTION indicates a potentially hazardous situation which, if not avoided, may result in minor or moderate injury.

IMPORTANT

Indicated installation, operation or maintenance information which is important but not hazard-related.

WARNING

Please read all instructions before using this refrigerator.

FOR YOUR SAFETY

- Do not store or use gasoline, or other flammable liquids in the vicinity of this or any other appliance. Read product labels for warnings regarding flammability and other hazards.
- Do not operate the refrigerator in the presense of explosive fumes.
- Avoid contact with any moving parts of automatic ice maker.
- Remove all staples from the carton. Staples can cause severe cuts, and also destroy finishes if they come in contact with other appliances or furniture.

CHILD SAFETY

Destroy or recycle the carton, plastic bags, and any exterior wrapping material immediately after the refrigerator is unpacked. Children should **NEVER** use these items to play. Cartons covered with rugs, bedspreads, plastic sheets or stretch wrap may become airtight chambers, and can quickly cause suffocation.

WARNING

These Guidelines Must Be Followed To Ensure That Safety Mechanisms In This Refrigerator Will Operate Properly.

ELECTRICAL INFORMATION

- The refrigerator must be plugged into its own dedicated 115 Volt, 60 Hz., 15 Amp, AC only electrical outlet. The power cord of the appliance is equipped with a three-prong grounding plug for your protection against electrical shock hazards. It must be plugged directly into a properly grounded three prong receptacle. The receptacle must be installed in accordance with local codes and ordinances. Consult a qualified electrician. Avoid connecting refrigerator to a Ground Fault Interruptor (GFI) circuit. Do not use an extension cord or adapter plug.
- If the power cord is damaged, it should be replaced by an authorized service technician to prevent any risk.
- Never unplug the refrigerator by pulling on the power cord. Always grip the plug firmly, and pull straight out from the receptacle to prevent damaging the power cord.
- Unplug the refrigerator before cleaning and before replacing a light bulb to avoid electrical shock.
- Performance may be affected if the voltage varies by 10% or more. Operating the refrigerator with insufficient power can damage the compressor. Such damage is not covered under your warranty.
- Do not plug the unit into an electrical outlet controlled by a wall switch or pull cord to prevent the refrigerator from being turned off accidentally.

PROPER DISPOSAL OF YOUR REFRIGERATOR OR FREEZER

Risk of child entrapment

Child entrapment and suffocation are not problems of the past. Junked or abondoned refrigerators or freezers are still dangerous – even if they will sit for “just a few days.” If you are getting rid of your old refrigerator or freezer, please follow the instructions below to help prevent accidents.

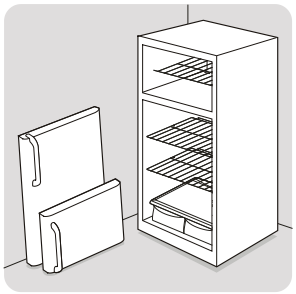

Before you throw away your old refrigerator/ freezer:

- Remove doors.
- Leave shelves in place so children may not easily climb inside.
- Have refrigerant removed by a qualified service technician.

INSTALLATION

IMPORTANT

Turning the Freezer and Fresh Food Controls to "0" turns off the compressor and prevents your refrigerator from cooling, but does not disconnect the power to the light bulb and other electrical components. To turn off power to your refrigerator you must unplug the power cord from the wall outlet.

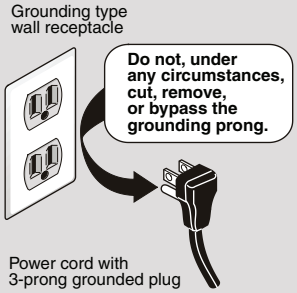

⚠ CAUTION

To avoid personal injury or property damage, handle tempered glass shelves carefully. Shelves may break suddenly if nicked, scratched, or exposed to sudden temperature change.

This Use & Care Manual provides specific operating instructions for your model. Use the refrigerator only as instructed in this Use & Care Manual. **Before starting the refrigerator, follow these important first steps.**

LOCATION

- Choose a place that is near a grounded electrical outlet. **Do Not** use an extension cord or an adapter plug.
- If possible, place the refrigerator out of direct sunlight and away from the range, dishwasher or other heat sources.
- The refrigerator must be installed on a floor that is level and strong enough to support a fully loaded refrigerator.
- Consider water supply availability for models equipped with an automatic ice maker.

INSTALLATION

⚠ CAUTION

Do Not install the refrigerator where the temperature will drop below 55°F (13°C) or rise above 110°F (43°C). The compressor will not be able to maintain proper temperatures inside the refrigerator.

Do Not block the toe grille on the lower front of your refrigerator. Sufficient air circulation is essential for the proper operation of your refrigerator.

IMPORTANT

If you install your refrigerator in a garage or other unheated area, you may experience freezer temperature problems during the winter months when temperatures dip below 55° F.

Upgrading your refrigerator with a Garage Kit will lower the minimum operating temperature of your unit to 34° F. This kit can be ordered through the *Electrolux Solutions Hotline* (see back cover).

Installation Clearances

- Allow the following clearances for ease of installation, proper air circulation, and plumbing and electrical connections:

Sides & Top	3/8"
Back	1"

NOTE

If you see black coils/tubing on the back of your refrigerator (air-cooled condenser) leave 3" clearance at top of refrigerator.

DOOR OPENING

Your refrigerator should be positioned to allow easy access to a counter when removing food. To make this possible, the direction in which the doors open can be reversed. See *Door Removal & Reversal Instructions*.

NOTE

If your refrigerator is placed with the door hinge side against a wall, you may have to allow additional space so the door can be opened wider.

LEVELING

All four corners of your refrigerator must rest firmly on a solid floor. Your refrigerator is equipped with adjustable front rollers or front leveling screws to help level your unit.

To Level Your Refrigerator:

1. Remove toe grille.
2. Use flat-blade screwdriver or 3/8" socket wrench to adjust front rollers. Use adjustable wrench to adjust leveling screws.

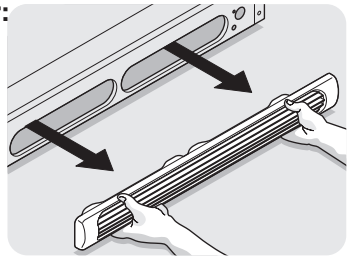

NOTE

Raise the front of the refrigerator enough so the doors close freely when opened halfway. The refrigerator should slope ¼" to ½" from front to back. Then level the refrigerator from side to side.

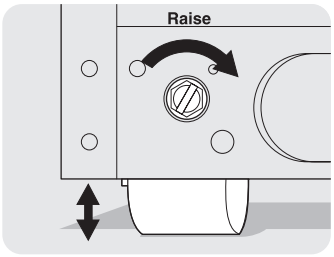

Adjustable Front Roller
(some models)

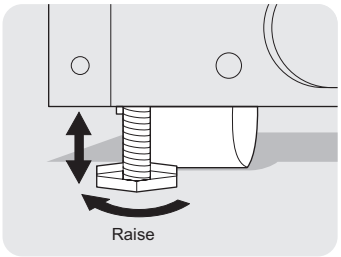

Stationary Front Roller
with Leveling Screw
(some models)

CONNECTING HOUSEHOLD WATER SUPPLY TO REFRIGERATOR

WARNING

To avoid electric shock, which can cause death or severe personal injury, disconnect the refrigerator from electrical power before connecting a water supply line to the refrigerator.

CAUTION

To Avoid Property Damage:

- **Copper tubing is recommended for the water supply line. Water supply tubing made of ¼" plastic is not recommended since it greatly increases the potential for water leaks. Manufacturer will not be responsible for any damage if plastic tubing is used for supply line.**
- **DO NOT install water supply tubing in areas where temperatures fall below freezing.**
- **Chemicals from a malfunctioning softener can damage the ice maker. If the ice maker is connected to soft water, ensure that the softener is maintained and working properly.**

IMPORTANT

Ensure that your water supply line connections comply with all state and local laws and regulations.

Before Installing The Water Supply Line, You Will Need

- **Basic Tools:** adjustable wrench, flat-blade screwdriver, and Phillips™ screwdriver
- Access to a household cold water line with water pressure between 30 and 100 psi. (cold water only)
- A water supply line made of ¼ inch (6.4 mm) OD, copper tubing. To determine the length of copper tubing needed, you will need to measure the distance from the ice maker inlet valve at the back of the refrigerator to your cold water pipe. Then add approximately 7 feet (2.1 meters), so the refrigerator can be moved out for cleaning (as shown).
- A shutoff valve to connect the water supply line to your household water system. **DO NOT** use a self-piercing type shutoff valve.
- A compression nut and ferrule (sleeve) for connecting the water supply line to the ice maker inlet valve.

NOTE

Water line kit number 5303917950, available from your appliance dealer at additional cost, contains 25 feet (7.6 meters) of ¼ inch OD copper tubing, a saddle type shutoff valve (nonpiercing), (2) ¼ inch brass compression nuts, (2) ferrules/sleeves, and instructions for installing a water supply line.

To Connect Water Supply Line To Ice Maker Inlet Valve

1. Disconnect refrigerator from electric power source.
2. Place end of water supply line into sink or bucket. Turn ON water supply and flush supply line until water is clear. Turn OFF water supply at shutoff valve.
3. Unscrew plastic cap from water valve inlet and discard cap.
4. Slide brass compression nut, then ferrule (sleeve) onto water supply line, as shown.
5. Push water supply line into water valve inlet as far as it will go (¼ inch). Slide ferrule (sleeve) into valve inlet and finger tighten compression nut onto valve. Tighten another half turn with a wrench; **DO NOT** over tighten.
6. With steel clamp and screw, secure water supply line to rear panel of refrigerator as shown.
7. Coil excess water supply line (about 2½ turns) behind refrigerator as shown and arrange coils so they do not vibrate or wear against any other surface.
8. Turn ON water supply at shutoff valve and tighten any connections that leak.
9. Reconnect refrigerator to electrical power source.
10. To turn ice maker on, lower wire signal arm (see ice maker front cover for ON/OFF position of arm).

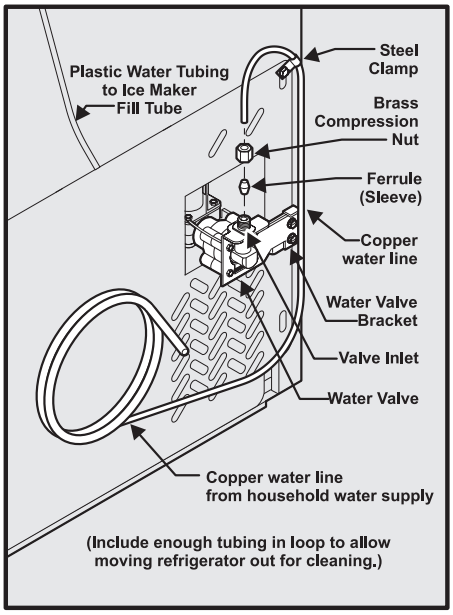

DOOR REMOVAL / REVERSAL INSTRUCTIONS

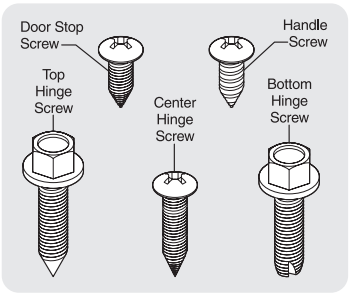

Tools Necessary:

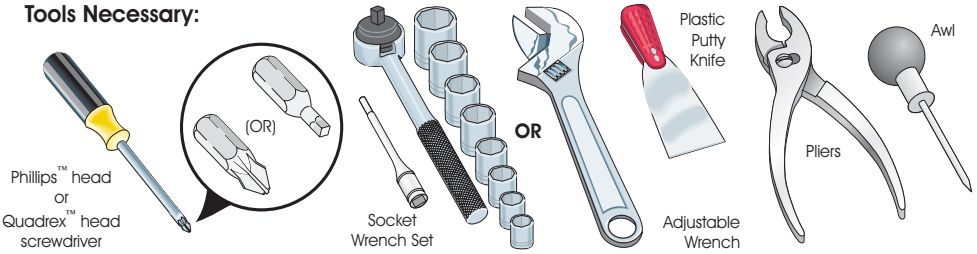

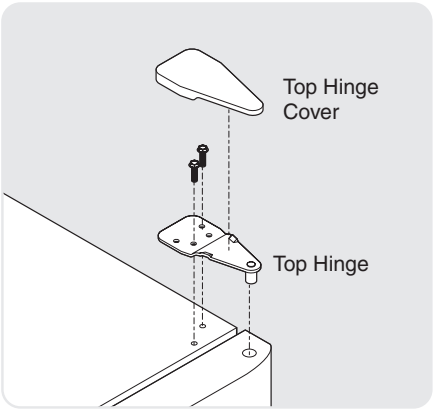

DOOR REMOVAL AND REVERSAL INSTRUCTIONS:

NOTE

The direction in which your refrigerator doors open (door swing) can be reversed, from left to right or right to left, by moving the door hinges from one side to the other. Reversing the door swing should be performed by a qualified person.

IMPORTANT

Before you begin, turn the refrigerator temperature control to “0” and remove the electrical power cord from the wall outlet. Remove any food from door shelves.

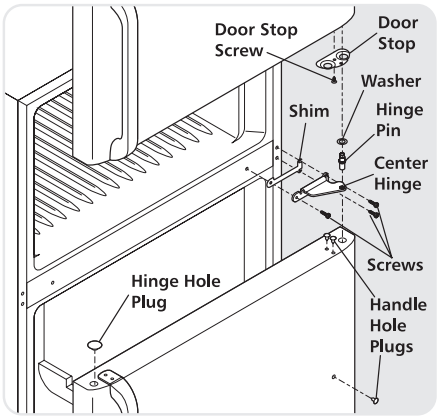

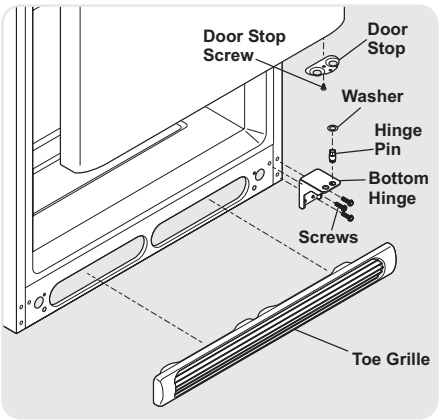

1. Remove toe grille.
2. Remove top hinge cover. Trace around the hinge with a soft lead pencil. This makes reinstallation easier. Remove top hinge and lift door off center hinge pin. Set door aside.
3. Unscrew center hinge pin using adjustable wrench and save for reassembly. Ensure plastic washer stays on hinge pin.
4. Lift refrigerator door off of bottom hinge and set aside.
5. Remove center hinge and shim by removing inside screw and loosening two outside screws enough to allow hinge and shim to slide out. Tighten screws.
6. Loosen two outside screws on opposite side of refrigerator, remove inside screw and install center hinge.
7. Remove two screws on bottom hinge with 3/8” socket wrench.
8. Install bottom hinge on opposite side with the two screws removed from step 7.
9. Unscrew bottom hinge pin using adjustable wrench. Move hinge pin to other hole in hinge and tighten with adjustable wrench.
10. Reverse door handles (see instructions on next page).
11. Move freezer and refrigerator door stops to opposite side. Before starting screws, use an awl to puncture the foam.
12. Position refrigerator door onto bottom hinge pin and screw center hinge pin through center hinge into top of door. Close refrigerator door to help align hinge hole.
13. Tighten center hinge pin with adjustable wrench.
14. Remove cabinet and hinge hole plugs and move to opposite side.
15. Lower freezer door onto center hinge pin.
16. Close freezer door. Have an assistant lift up on opposite side of door while tightening screws to install top hinge.
17. Flip toe grille and reinstall.
18. Plug in electrical power cord and turn refrigerator temperature control to center position. Adjust setting as necessary.

DOOR REMOVAL / REVERSAL INSTRUCTIONS

TO REMOVE FREEZER HANDLE:

(Handles may be easier to reverse while doors are off.)

1. Remove two screws attaching handle to bottom of freezer door.
2. Swing bottom of handle away from the door and slide handle straight up and off of dovetail button.
3. Remove screw and dovetail button and install on other side, using the same holes as nameplate.
4. **Self-Adhesive Nameplate Models:** Use putty knife to gently peel off nameplate from door and reapply over old handle holes.

TO ATTACH FREEZER HANDLE:

1. Start with handle offset away from door. Place top of handle over dovetail button, swing handle into an upright position and pull downward, locking it into place.
2. Secure bottom of handle with two screws removed earlier.

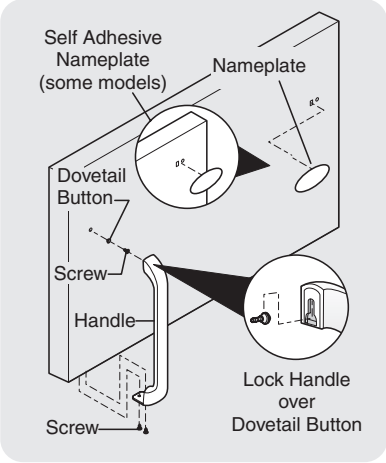

TO REMOVE REFRIGERATOR HANDLE:

(Handles may be easier to reverse while doors are off.)

1. Remove two screws attaching handle to top of refrigerator door.
2. Swing top of handle away from door and slide handle down and off of dovetail button.
3. Remove screw and dovetail button and install on other side, moving hole plugs from corresponding holes to opposite side.

TO ATTACH REFRIGERATOR HANDLE:

1. Start with handle offset away from door. Place bottom of handle over dovetail button, swing handle into an upright position and pull upward, locking it into place.
2. Secure top of handle with screws.

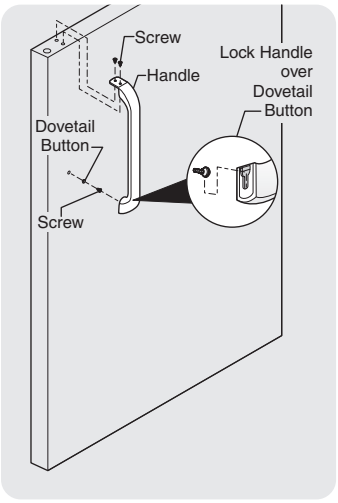

TEMPERATURE CONTROLS

COOL DOWN PERIOD

To ensure safe food storage, allow the refrigerator to operate with the doors closed for at least 8 to 12 hours before loading it with food.

REFRIGERATOR & FREEZER CONTROLS

NOTE

When making changes to the temperature controls, wait 24 hours for the temperature to stabilize before making additional changes.

NOTE

When first turning refrigerator on, move refrigerator and freezer controls to ***Normal***. This is the recommended initial setting. After 24 hours, adjust the controls as needed.

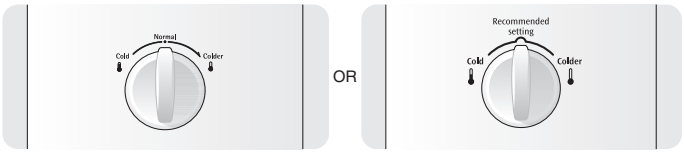

Freezer Control (some models)

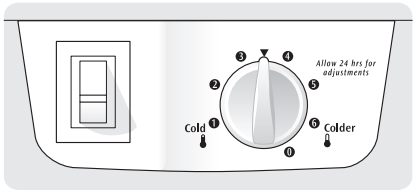

OR

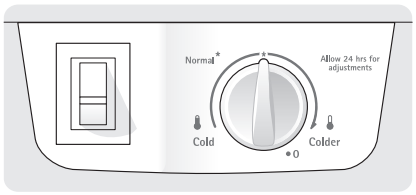

Refrigerator Control
(some models)

TEMPERATURE ADJUSTMENT

- **Adjust temperature gradually: move the knob in small increments, allowing the temperature to stabilize.**
- For colder temperatures, turn the knob towards **Colder**.
- For warmer temperatures, turn the knob towards **Cold**.

Turning the refrigerator control will change temperatures in both compartments. For example, if the refrigerator control is turned to a colder setting, the freezer control may have to be adjusted to a warmer setting. Turning the freezer control will change only the freezer temperature.

To maintain temperatures, a fan circulates air in the refrigerator and freezer compartments. For good circulation, do not block cold air vents with food items.

*** IMPORTANT**

Turning the refrigerator temperature control to “0” turns off the compressor and prevents the refrigerator from cooling, but does not disconnect the power to the light bulb and other electrical components. To turn off power to your refrigerator, you must unplug the power cord from the wall outlet.

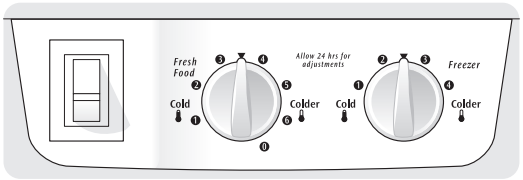

OR



Refrigerator & Freezer Control (some models)

TEMPERATURE ADJUSTMENT GUIDE	
If Refrigerator compartment Is Too Warm	Turn Refrigerator Control Slightly Towards **Colder**.
If Refrigerator compartment Is Too Cold	Turn Refrigerator Control Slightly Towards **Cold**.
If Freezer compartment Is Too Warm	Turn Freezer Control Slightly Towards **Colder**.
If Freezer compartment Is Too Cold	Turn Freezer Control Slightly Towards **Cold**.
*** To Turn Refrigerator Off**	Turn Refrigerator Control To **0**.

ICE SERVICE

If your refrigerator has an automatic ice maker, it will provide a sufficient supply of ice for normal use. During the initial startup of your refrigerator, no ice will be produced during the first 24 hours of operation. Air in new plumbing lines may cause the ice maker to cycle two or three times before making a full tray of ice. With no usage, it will take approximately one to two days to fill the ice container.

New plumbing connections may cause the first production of ice cubes to be discolored or have an odd flavor. Discard ice made during the first 24 hours.

NOTE

NOTE: Automatic ice makers are also optional accessories that may be installed in most models at any time. Call your local dealer for information.

TURNING YOUR ICE MAKER ON

After the plumbing connections have been completed, the water supply valve must be opened. Place the ice container under the ice maker, pushing it as far back as possible. Lower the wire signal arm to its “down” or ON position.

TURNING YOUR ICE MAKER OFF

To stop the ice maker, lift the wire signal arm until it clicks and locks in the “up” or OFF position. The ice maker also turns off automatically when the ice container is full. If your model has an adjustable freezer shelf, place the shelf in the lower position, so that the wire signal arm will hit the ice when the container is full.

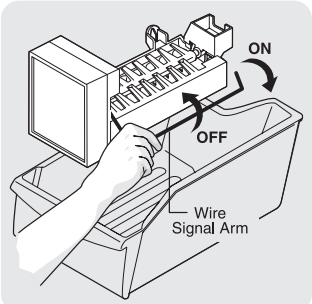

⚠ CAUTION

Chemicals from a malfunctioning softener can damage the ice maker. If the ice maker is connected to soft water, ensure that the softener is maintained and working properly.

IMPORTANT

Your ice maker is shipped from the factory with the wire signal arm in the ON position. To ensure proper function of your ice maker, hook up water supply immediately or turn ice maker OFF by lifting the wire signal arm until it clicks and locks in the UP position. **If the ice maker is not turned off and the water supply is not connected, the water valve will make a loud chattering noise.**

ICE PRODUCTION: WHAT TO EXPECT

The ice maker will produce 2.5 to 3 pounds of ice every 24 hours depending on usage conditions. Ice is produced at a rate of 8 cubes every 80 to 160 minutes.

⚠ CAUTION

DO NOT place the ice container in your dishwasher.

NORMAL OPERATING SOUNDS & SIGHTS

UNDERSTANDING THE SOUNDS YOU MAY HEAR

Your new high-efficiency refrigerator may make unfamiliar sounds. These are all normal sounds and soon will become familiar to you. They also indicate your refrigerator is operating as designed. Hard surfaces, such as vinyl or wood floors, walls, and kitchen cabinets may make sounds more noticeable. Listed below are descriptions of some of the most common sounds you may hear, and what is causing them.

NOTE

Rigid foam insulation is very energy efficient, but is not a sound insulator.

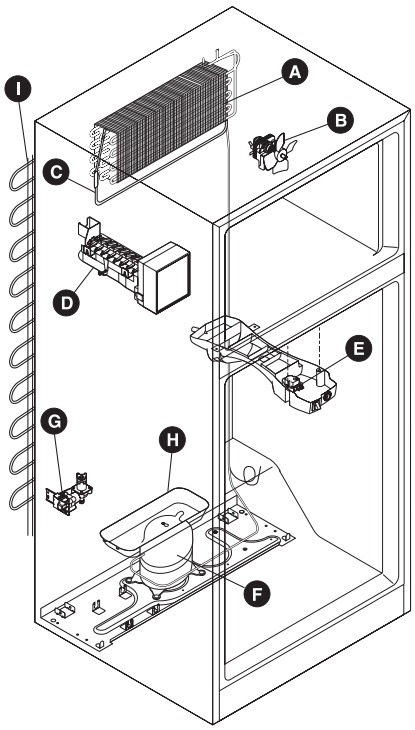

A. Evaporator

The flow of refrigerant through the evaporator may create a boiling or gurgling sound.

B. Evaporator Fan

You may hear air being forced through the refrigerator by the evaporator fan.

C. Defrost Heater

During defrost cycles, water dripping onto the defrost heater may cause a hissing or sizzling sound. After defrosting, a popping sound may occur.

IMPORTANT

During the automatic defrost cycle, you may notice a red glow in the vents on the back wall of your freezer compartment. This is normal during the defrost cycle.

D. Automatic Ice Maker

If your refrigerator is equipped with an automatic ice maker, you will hear ice cubes falling into the ice bin.

E. Cold Control/Defrost Timer or Auto Defrost Control

These parts can produce a snapping or clicking sound when turning the refrigerator on and off. The timer also produces sounds similar to an electric clock.

F. Compressor

Modern, high-efficiency compressors operate much faster than older models. The compressor may have a high-pitched hum or pulsating sound.

G. Water Valve

If your refrigerator is equipped with an automatic ice maker, you will hear a buzzing sound as the water valve opens to fill the ice maker during each cycle.

H. Drain Pan (Nonremovable)

You may hear water running into the drain pan during the defrost cycle. The drain pan will be located on top of the compressor for air-cooled condensers (black coils on back of refrigerator).

I. Condenser Coils

CARE & CLEANING

REPLACING THE FREEZER LIGHT BULB (SOME MODELS)

CAUTION

Avoid cuts when replacing light bulbs, wear gloves.

1. Unplug refrigerator.
2. Wear gloves as protection against possible broken glass.
3. Unsnap light shield as shown.
4. Unscrew and replace old bulb with an appliance bulb of the same wattage.
5. Replace light shield.
6. Remember to plug the refrigerator back in.

NEVER CLEAN CONDENSER (SOME MODELS)

If your refrigerator is equipped with a Never Clean condenser, there's no need to clean the condenser under normal operating conditions. If the refrigerator is operated under particularly dusty or greasy conditions, or if there is significant pet traffic in your home, it may be necessary to periodically clean the condenser for maximum efficiency.

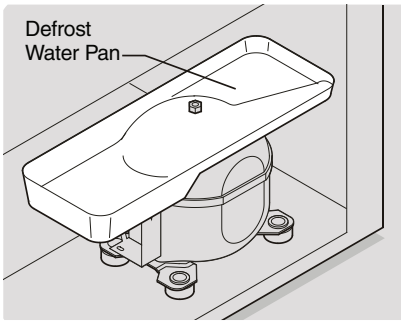

CARE & CLEANING

Keep your refrigerator and freezer clean to prevent odor build-up. Wipe up any spills immediately and clean both sections at least twice a year. **Never** use any type of scouring pads, brushes, abrasive cleaners or strong alkaline solutions on any surface. **Do not** wash any removable parts in a dishwasher. ***Always unplug the electrical power cord from the wall outlet before cleaning.***

CAUTION

- **When moving the refrigerator, pull straight out. Do not shift the refrigerator from side to side as this may tear or gouge the floor covering. If the refrigerator has an automatic ice maker, be careful not to move the refrigerator beyond the plumbing connections.**
- **Damp objects stick to cold metal surfaces. Do not touch refrigerated surfaces with wet or damp hands.**
- **Never use CHLORIDE to clean stainless steel.**

NOTE

- Do not use abrasive cleaners such as window sprays, scouring cleansers, flammable liquids, cleaning waxes, concentratred detergents, bleaches or cleansers containing petroleum products or plastic parts, interior doors, gaskets or cabinet liners, Do not use paper towels, scouring pads, or other abrasive cleaning materials.
- Turning the refrigerator temperature control to "**0**" turns off the compressor, but does not disconnect electrical power to the light bulb or other electrical components. To turn off power to your refrigerator, you must unplug the power cord from the wall outlet.
- Do not use razor blades or other sharp instruments which can scratch the appliance surface when removing adhesive labels. Any glue left from tape or labels can be removed with a mixture of warm water and mild detergent, or, touch the glue residue with the sticky side of tape you have already removed. **Do not remove the serial plate.**

Care & Cleaning Chart

Part	What To Use	Tips and Precautions
Interior/Door Liner	• Soap and water • Baking soda and water	Use 2 tablespoons of baking soda in 1 quart of warm water. **Be sure to wring excess water out of sponge or cloth before cleaning around controls, light bulb or any electrical part.**
Door Gaskets	• Soap and water	Wipe gaskets with a clean soft cloth.
Drawers/Bins	• Soap and water	Do not wash any removable items (bins, drawers, etc.) in dishwasher.
Glass Shelves	• Soap and water • Glass cleaner • Mild liquid sprays	Allow glass to warm to room temperature before immersing in warm water.
Toe Grille	• Soap and water • Mild liquid sprays • Vacuum attachment	Vacuum dust from front of toe grille. Vacuum backside and wipe with sudsy cloth or sponge. Rinse and dry.
Exterior and Handles	• Soap and water • Non Abrasive Glass Cleaner	Do not use commercial household cleaners, ammonia, or alcohol to clean handles. Use a soft cloth to clean smooth handles. **DO NOT use a dry cloth to clean smooth doors.**
Exterior and Handles (Stainless Steel Models Only)	• Soap and water • Stainless Steel Cleaners	**CAUTION: Never use CHLORIDE to clean stainless steel.** Clean stainless steel front and handles with soapy water and a dishcloth. Rinse with clean water and a soft cloth. Use a non-abrasive stainless steel cleaner. These cleaners can be purchased at most home improvement or major department stores. Always follow manufacturer's instructions. **NOTE: Always clean, wipe and dry with the grain to prevent cross-grain scratching.** Wash the rest of the cabinet with warm water and mild liquid detergent. Rinse well, and wipe dry with a clean soft cloth.
Exterior (*Easy Care* Stainless Steel Models)	• Soap and water • Mild liquid sprays	**CAUTION: DO NOT use abrasive or stainless steel cleaners on *Easy Care* Stainless Steel Models. It will remove the protective finish.** Use warm soapy water to clean ***Easy Care*** surfaces. Mild liquid sprays may be used on stubborn spots.

WHITE WESTINGHOUSE APPLIANCE WARRANTY INFORMATION

Your appliance is covered by a **90 day limited warranty**. For 90 days from your original date of purchase, Electrolux will pay costs, except as set forth below, associated with replacing any parts of this appliance that prove to be defective in materials or workmanship when such appliance is installed, used, and maintained in accordance with the provided instructions.

Exclusions **This warranty does not cover the following:**

1. Products with original serial numbers that have been removed, altered or cannot be readily determined.
2. Product that has been transferred from its original owner to another party or removed outside the USA or Canada.
3. Rust on the interior or exterior of the unit.
4. Products purchased “as-is” are not covered by this warranty.
5. Food loss due to any refrigerator or freezer failures.
6. Products used in a commercial setting.
7. Service calls which do not involve malfunction or defects in materials or workmanship, or for appliances not in ordinary household use or used other than in accordance with the provided instructions.
8. Service calls to correct the installation of your appliance or to instruct you how to use your appliance.
9. Expenses for making the appliance accessible for servicing, such as removal of trim, cupboards, shelves,etc.,which are not a part of the appliance when it is shipped from the factory.
10. Service calls to repair or replace appliance light bulbs, air filters, water filters, other consumables, or knobs, handles, or other cosmetic parts.
11. Surcharges including, but not limited to, any after hour, weekend, or holiday service calls, tolls, ferry trip charges, or mileage expense for service calls to remote areas, including the state of Alaska.
12. Damages to the finish of appliance or home incurred during installation, including but not limited to floors, cabinets, walls, etc.
13. Damages caused by: services performed by unauthorized service companies; use of parts other than genuine Electrolux parts or parts obtained from persons other than authorized service companies; or external causes such as abuse, misuse, inadequate power supply, accidents, fires, or acts of God.

DISCLAIMER OF IMPLIED WARRANTIES; LIMITATION OF REMEDIES

CUSTOMER’S SOLE AND EXCLUSIVE REMEDY UNDER THIS LIMITED WARRANTY SHALL BE PRODUCT REPAIR AS PROVIDED HEREIN. CLAIMS BASED ON IMPLIED WARRANTIES, INCLUDING WARRANTIES OF MERCHANTABILITY OR FITNESS FOR A PARTICULAR PURPOSE, ARE LIMITED TO THE DURATION OF THE EXPRESS LIMITED WARRANTY STATED ABOVE. ELECTROLUX SHALL NOT BE LIABLE FOR CONSEQUENTIAL OR INCIDENTAL DAMAGES SUCH AS PROPERTY DAMAGE AND INCIDENTAL EXPENSES RESULTING FROM ANY BREACH OF THIS WRITTEN LIMITED WARRANTY OR ANY IMPLIED WARRANTY. SOME STATES AND PROVINCES DO NOT ALLOW THE EXCLUSION OR LIMITATION OF INCIDENTAL OR CONSEQUENTIAL DAMAGES, OR LIMITATIONS ON THE DURATION OF IMPLIED WARRANTIES, SO THESE LIMITATIONS OR EXCLUSIONS MAY NOT APPLY TO YOU. THIS WRITTEN WARRANTY GIVES YOU SPECIFIC LEGAL RIGHTS. YOU MAY ALSO HAVE OTHER RIGHTS THAT VARY FROM STATE TO STATE.

If You Need Service Keep your receipt, delivery slip, or some other appropriate payment record to establish the warranty period should service be required. If service is performed, it is in your best interest to obtain and keep all receipts. Service under this warranty must be obtained by contacting Electrolux at the addresses or phone numbers below.

This warranty only applies in the USA and Canada. In the USA, your appliance is warranted by Electrolux Major Appliances North America, a division of Electrolux Home Products, Inc. In Canada, your appliance is warranted by Electrolux Canada Corp. Electrolux authorizes no person to change or add to any obligations under this warranty. Obligations for service and parts under this warranty must be performed by Electrolux or an authorized service company. Product features or specifications as described or illustrated are subject to change without notice.

USA
1.866.312.2117
Electrolux Major Appliances
North America
P.O. Box 212378
Augusta, GA 30907

Canada
1.800.668.4606
Electrolux Canada Corp.
5855 Terry Fox Way
Mississauga, Ontario, Canada
L5V 3E4

BEFORE YOU CALL

1-800-944-9044 (United States)
1-800-668-4606 (Canada)

Visit our web site at
www.frigidaire.com.

Common Occurrences	Before calling for service, review this list. It may save you time and expense. This list includes common occurrences that are not the result of defective workmanship or materials in this appliance.
Refrigerator does not run.	• Ensure plug is tightly pushed into electrical outlet. • Check/replace fuse with a 15 amp time-delay fuse. Reset circuit breaker. • The temperature control is turned to "**O**". • Refrigerator may be in defrost cycle. Wait 20 minutes and check again.
Freezer temperature too cold. Refrigerator temperature is satisfactory.	• Set freezer control to a warmer setting until freezer temperature is satisfactory. Allow 24 hours for the temperature to stabilize.
Refrigerator temperature too cold. Freezer temperature is satisfactory.	• Set refrigerator control to a warmer setting. Allow 24 hours for temperature to stabilize. Then check freezer temperatures and adjust as needed.
*** Refrigerator is noisy or vibrates.**	• The cabinet is not level. • Floor is weak.
Odors in refrigerator.	• Interior needs to be cleaned. • Foods that produce odors should be covered or wrapped.
Cabinet light not working.	• Replace light bulb. • Ensure plug is tightly pushed into electrical outlet. • Light switch may be stuck. Push in light switch, located on the refrigerator control box, to release.
Automatic ice maker not working. (some models)	• Ensure the Wire Signal Arm is not in UP position. • Ice maker should produce 4 to 5 pounds of ice in a 24 hour period. • Water supply is turned off. • Water pressure is too low. • The freezer is not cold enough.