WINE CELLAR

Instruction manual

EN



DUW46DBA

De Dietrich

CRÉATEUR D'ÉMOTIONS DEPUIS 1684

EN

DEAR CUSTOMER,

You have just purchased a De Dietrich appliance. This choice reflects your high standards as well as your taste for the French art of living.

With over 300 years of heritage, our creations embody the perfect blend of design, authenticity and technology at the service of the culinary arts.

De Dietrich cultivates a constant quest for excellence, perpetuating exceptional craftsmanship in the creation of impeccably finished products. These are made with the finest materials and finished to the highest standards.

We hope you find great satisfaction in using your new appliance and eagerly anticipate any suggestions or questions you may have. De Dietrich's Customer Service is available to address your inquiries and feedback, ensuring that we consistently meet your needs.

We are honored to become your new partner in your home and sincerely appreciate your trust.

www.de-dietrich.com

SAFETY

CE This appliance complies with the European directives.

SAFETY GUIDELINES

For your safety and in order to use your appliance correctly, carefully read these instructions (including the warnings and useful advice), before installation and first use.

To avoid damaging the appliance and unnecessary injury, it is important that the persons who use the appliance fully understand how it works and the safety instructions.

Always keep these instructions close to the appliance so that they can accompany it in the event of resale or a change of house. In this way, the appliance will continue to function optimally, and any risk of injury will be avoided.

The manufacturer shall not be held liable in the event of misuse of the appliance.

GENERAL SAFETY AND WARNINGS

This appliance is exclusively intended for domestic use in private households. It may only be used in a roofed, enclosed and heated environment such as a kitchen or any other room fulfilling these conditions. Its use on shared or professional premises such as in an office or workshop break room, a campsite building, or a hotel, etc., does not comply with the use defined by the manufacturer.



WARNING! Keep your appliance away from any source of flame during installation, servicing and use. The symbol in the margin which is found on the rear of your appliance means that there are inflammable materials in this area.

The refrigerating and insulating agents used in this appliance contain inflammable gases.

When transporting, installing and servicing the appliance, make sure that none of the components of the cooling circuit are damaged. If the cooling circuit is damaged:

- ✓ Avoid naked flames and all sources of inflammation.
- ✓ Ventilate the room in which the appliance is installed.

⚠ Installation safety

- Your appliance must be installed and, if necessary, secured and used in accordance with the instructions in this manual in order to avoid any risks due to poor installation.
- Maintain clear of obstruction ventilation openings in the appliance enclosure or in the built-in structure.
- It is dangerous to change the composition of this model in any way whatsoever.
- Do not locate multiple portable socket-outlets or portable power supplies at the rear of the appliance。
- When positioning the appliance, ensure the supply cord is not trapped or damaged.
- Any damage to the power cord may result in a short circuit and/or electrocution.
- If the power cord is damaged, it should be replaced by the manufacturer, its after-sales service department or a similarly qualified person, so as to avoid danger.
- Do not place multiple plugs or portable power supply units behind the appliance.
- Use a separate earthed plug of at least 10A and do not plug the appliance into a transformer or multi-socket adaptor.
- Make sure the plug is properly inserted in the socket in order to avoid any fire risks.
- The plug must be easily accessible once the appliance installed in order to be able to unplug it quickly in the event of an incident.

⚠ Safety of vulnerable persons

- This appliance is not intended for use by people (including children) with reduced physical, sensory or mental capabilities, or lack of experience and knowledge, unless they have been given supervision or instruction concerning use of the appliance by a person responsible for their safety.
- Children should be supervised to ensure that they do not play with the appliance.
- Children must not play with the appliance.
- Cleaning and maintenance operations must not be carried out by children without supervision.
- Children aged 3 to 8 are allowed to load and unload refrigeration appliances.
- Keep all the packaging materials out of the reach of children, as they can cause suffocation.
- Do not let children hang on the door as the appliance may tip over.
- Do not let children reach the compressor compartment or the metal parts at the back of the appliance as they may injure themselves.

⚠ Safety of use

- Do not damage the refrigerating circuit.
- Do not use any mechanical or other means, other than those recommended by the manufacturer, to speed up the defrosting process.
- Do not use any electric appliances inside the compartment for food, unless they are of a type recommended by the manufacturer.
- Do not store any explosive substances, such as aerosols containing inflammable propellant gases, inside the appliance.
- Do not spray water onto the appliance, nor pour water onto it or fill it with water to wash it, as this may damage the insulation or cause an electric shock
- Do not touch the surface inside the compartment, especially if you have wet hands, as the frost could injure you when the appliance is operating.

⚠ Food safety

To avoid contaminating the wine, you must follow the instructions below:

- Leaving the door open for long periods of time may significantly raise the temperature in the appliance compartments.
- If the refrigerating appliance is left empty for long periods, switch off, defrost, clean, dry, and leave the door open to prevent mold developing within the appliance.

DISPOSAL



This symbol indicates that this product should not be treated as household waste.

Only dispose of the appliance in certified collection centers.

Your appliance contains a large amount of recyclable material. It is marked with this label to indicate the used appliances must be disposed of in certified collection points.

Contact your local authority or retailer for details of your nearest used equipment collection points. Recycling of appliances organised by your manufacturer is carried out under the best conditions, in accordance with the European regulation on disposal of electronic and electrical equipment.

This appliance's packing materials are also recyclable. Help recycle it and protect the environment by dropping it off in the municipal receptacles provided for this purpose.

In accordance with the most recent legislative provisions applying to the protection and respect for the environment, your appliance does not contain any CFCs, but a refrigerant called R600a. The exact type of coolant gas used in your appliance is clearly shown on the ID plate inside the fridge part of your appliance, at the foot of the left-hand side panel. R600a is a non-polluting gas that does not harm the ozone layer and hardly contributes to the greenhouse effect at all.

Used appliances must be immediately made unusable.

Disconnect the power cord and cut it as close to the appliance as possible. Inhibit the closing mechanism of the door or, even better, detach the door, so that children or pets cannot remain enclosed inside the appliance when playing.

ECODESIGN

Layout and presentation of your appliance

- This appliance is intended to be used as a built-in appliance.
- Your appliance was designed and tested to optimise its energy use.

Accessories & name

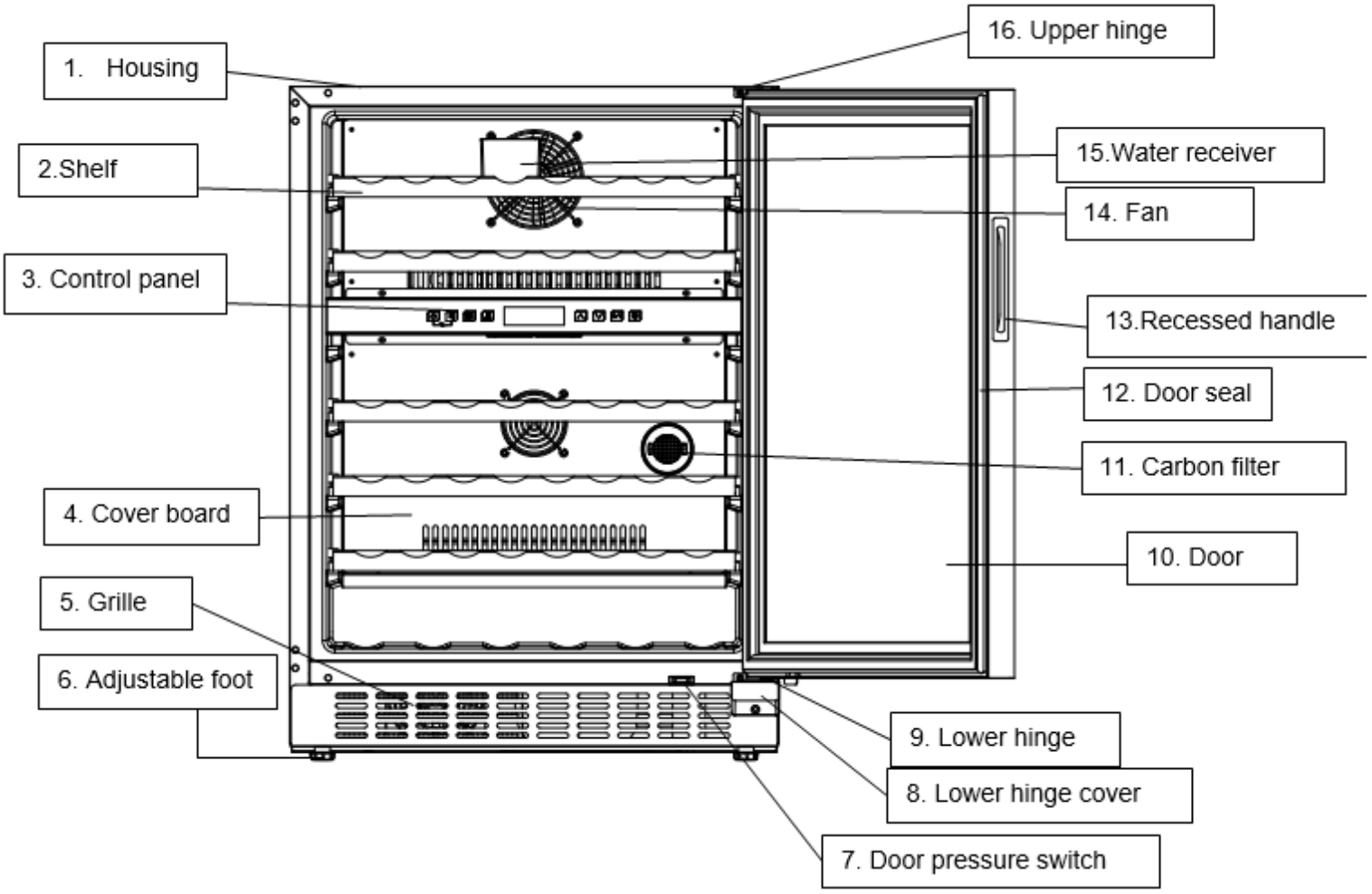

Note: Shelves, door frame, handle and other accessories could be different according to different models and configuration.
All photos in this manual are for reference. The appliance you buy might not be exactly the same as shown here.
Please refer to the actual product.
This product has an electric heating door, which can effectively prevent condensation on the surface of the door glass.

You can only keep your wine in good condition and optimize your energy consumption by following the instructions in this installation and user guide.

Energy-saving measures

In order to reduce the power consumption of your appliance:

- Install it in a suitable location (see "Installing your appliance").
- Leave the doors open for the shortest time possible.
- Do not introduce any hot items into your wine cellar.
- Regularly check the door seals and make sure that the doors can be closed properly. If this is not the case, contact after-sales service.
- Do not adjust the temperature too low.

Wine conservation

- The appliance equip with sufficient independent shelf to allow your collection of wine to mature quietly and peacefully.
- Five wooden shelves loading capacity: 46 bottles. (standard Bordeaux with 750ml)

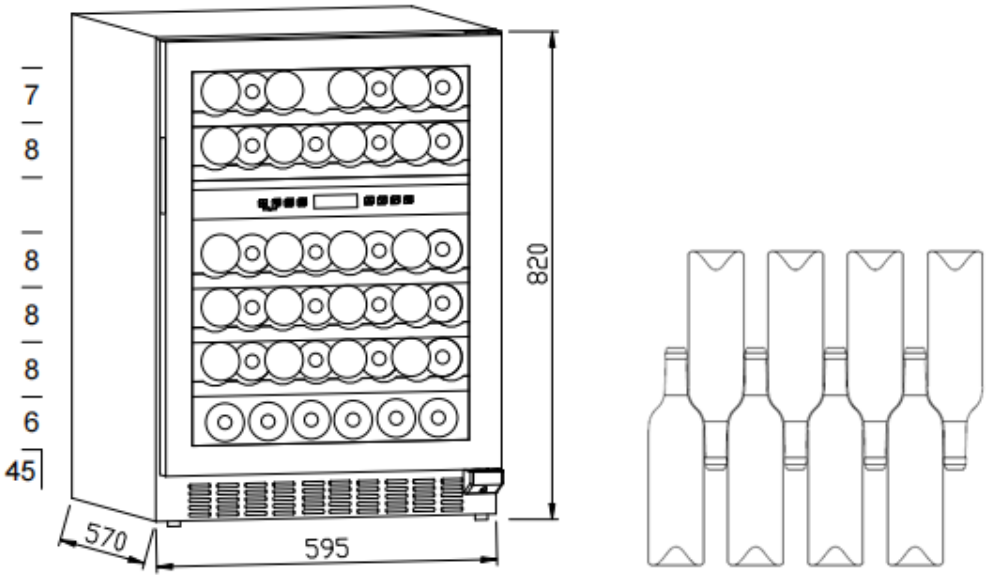

- Loading capacity will vary in terms of different way of bottle arrangement or different bottle sizes.
- Each shelf is designed to put on 1 or 2 layers of wine bottles. More than 2 layers of bottle arrangement on one shelf are not recommended.
- Each shelf could pull out partly to store wine bottles easily.
- Open the door straight enough before pulling out shelves.
- The shelf should be avoided in front of the fan as much as possible to avoid blocking the air inlet and affecting the cooling efficiency.
- If the wine cooler would have no load for a long time, it is recommended to power it off, clean it carefully, and open the door for ventilation.
- Below table is the recommended temperature for wine storing & drinking:

Red Wine	15-18℃
White Wine	9-14℃
Rose wine	10-11℃
Champagne & sparkling wine	5- 8℃

INSTALLATION

⚠ Care before installation

Before installing the appliance and connecting it to the power grid, wash the walls and all internal accessories with lukewarm water and neutral soap so as to remove the typical smell of a brand-new product, then dry thoroughly, and make sure the drain hoses are properly connected (see the “Maintenance and Care” section).

ⓘ **Never use detergents or abrasive cleaners, they will damage the inside coating.**

Before plugging in the appliance, place it upright on a firm and dry floor for at least 30 minutes.

The appliance will switch on and start cooling 1 hour later, if this does not occur, make sure it is properly plugged in.

Location

⚠ **Warning! Never expose the appliance to a naked flame.**

- Do not lean the appliance over 45°when moving it to position.
- The appliance must be put on flat,firm & dry floor or similar noncombustible pad; do not use the package foam pad.
- Do not put the appliance in the wet place.
- Do not use the appliance in the frozen place.
- Do not use the appliance outdoor in case of sunlight or rain.
- The appliance must be set with 10 cm wider space around for good ventilation; it is normal for the housing of the cabinet getting heat when it’s in operation.
- Your appliance is designed to function optimally at a given ambient temperature. In this case, it is said to be designed for a particular "climate class". The climate class is clearly shown on the ID plate (see the "Contact" chapter). The appliance may not maintain satisfactory inside temperatures if it operates outside of the temperature limits set for the climate class it is designed for. Ensure that the chosen location is compliant with these temperature limits:

Class	Ambient temperature
SN	This refrigeration appliance is designed for use at ambient temperatures **between 10°C and 32°C**
SN-ST	This refrigeration appliance is designed for use at ambient temperatures **between 10°C and 38°C**
SN-T	This refrigeration appliance is designed for use at ambient temperatures **between 10°C and 43°C**
N	This refrigeration appliance is designed for use at ambient temperatures **between 16°C and 32°C**
ST	This refrigeration appliance is designed for use at ambient temperatures **between 16°C and 38°C**
T	This refrigeration appliance is designed for use at ambient temperatures **between 16°C and 43°C**

- Based on the above, avoid placing your appliance on balconies, verandas, terraces, in garages, etc. Excessive heat in summer and cold in winter will prevent it from operating properly and therefore properly conserving wine.

- It is normal for the appliance's compartment to heat up when it is operating.
- You can start placing bottles inside the appliance when it starts cooling, in general 1h after switching it on.

ⓘ If your appliance is fitted with casters, then remember that they should only be used for short movements. Do not move the appliance over long distances on its casters.

The appliance is designed to either build under the counter or stand alone on the floor:

Demonstration for building under the counter

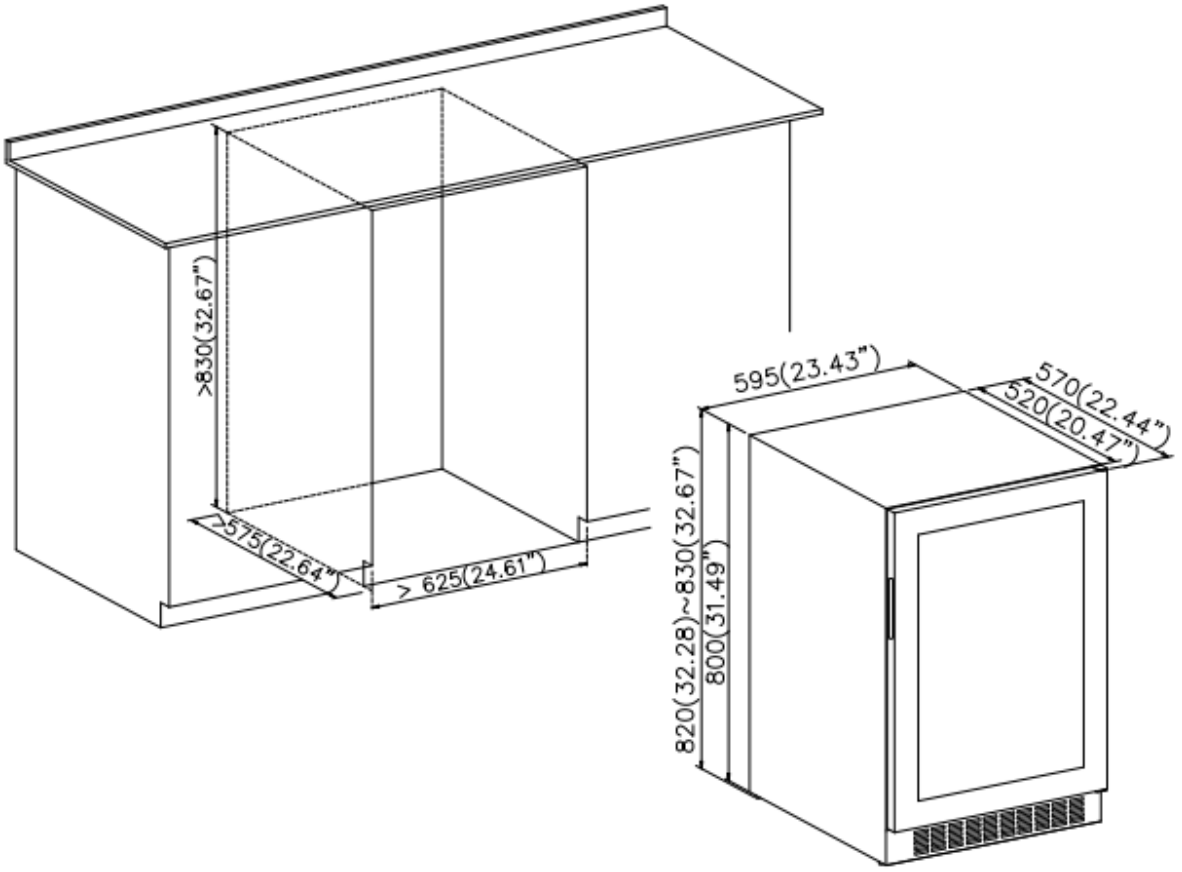

Wine bottles could be stored when you feel cooling inside after the appliance operates around 1 hour.

Electrical connections



Warning! It must be possible to unplug the appliance from the mains power, so the plug must remain easy to access after installation.

- The electric connections must meet the applicable standards and be capable of withstanding the maximum power shown on the ID plate.
- The power plug must be easily accessible and out of the reach of children.
- For your safety this appliance must be earthed. If the power plug is not earthed, consult a qualified electrician to connect your appliance in line with applicable regulations.
- Do not use extensions, adapters or multiple plugs.
- Do not place multiple plugs or portable power supply units behind the appliance.

The manufacturer declines all liability if the above mentioned safety precautions are not complied with. **If in doubt, refer to your reseller.**

USE & TIPS

Start operation

1. Cleaning the compartment
   Before power on, clean inside of the appliance and check the drainage pipe in good connection.
   （For details, please refer to the “Maintenance and cleaning”）
2. Put the appliance still
   Before power on, level the appliance on the firm & dry floor for at least 3 hours.
3. Power on
   The appliance start operation, and it will cool down inside after 1 hour, otherwise you should check the power connection.

Control panel (LCD Display)



All keys would be invalid if in lock mode. Please unlock first.



ON/OFF

1. Keep pressing the key 3 seconds, power down, goes to stand-by mode.
2. Keep pressing the key again 3 seconds to return back to normal working.



Sound elimination

Press the key can turn off the button sound and alarm sound.



Zone switch

Press the key to switch between upper zone and lower zone for choosing which zone to set temperature. Press the key once, the **LCD** display in chosen zone flash regularly. Press up and down key to set temperature. Press the key again; switch to other zone to set temperature.



Switch display actual temperature or set temperature

Under unlock status, press the key to switch to display actual temperature or set temperature.



Child safety lock（Combination of buttons）

1. **Lock:** press both keys at the same time for 3 seconds to lock.
2. **Unlock:** press both keys at the same time for 3 seconds to unlock..



Fahrenheit/Celsius display interchange

Switch temperature display between Fahrenheit and Celsius by pressing and holding the key for 2 seconds.



Light

Press the key, turn on or turn off the LED lights inside. In stand-by mode, the key is invalid.

Attention!

- The ex-factory temperature of this product is 12℃, and the corresponding temperature range needs to be set according to the actual wine.
- For both upper and lower zone, the cooling temperature could be set from 5-22℃. And temperature of lower zone could only be set equal to or higher than that of upper zone.
- Temperature alarm: if the temperature of either zone increases or decreases out of the temperature range, the alarm sound will be issued. The relevant temperature display will flash at the same time.
- The temperature set by the equipment determines the temperature that the equipment recognizes as overheated or overcooled. The alarm will sound and the temperature display flashes:
- When you open the equipment, if the inside temperature of the equipment is very different from the set temperature.
- Or put too many things into this appliance at one time. Or too much ambient air is flowing in when cleaning and removing storage items.
- When the door is not closed.
- The equipment is faulty. When the set temperature is reached again, the sound alarm will be muted automatically, and the temperature display will stop flashing.
- However, if the noise disturbs you, you can press any buttons to cancel the alarm sound. The alarm will stop. The related temperature display flash continuously until the set temperature is reached.
- **Alarm sound**: When the system malfunction occurs and alarm sound, press any key on the control panel to cancel the alarm sound.
- **Error code**
    - When the temperature sensor of upper zone failure occurs, error code displays: E1 for open circuit; E2 for short circuit.
    - When the defrost sensor failure occurs, error code displays: E3 for open circuit; E4 for short circuit.
    - When the temperature sensor of Lower zone failure occur, error code displays: E5 for open circuit; E6 for short circuit.

Humidification box

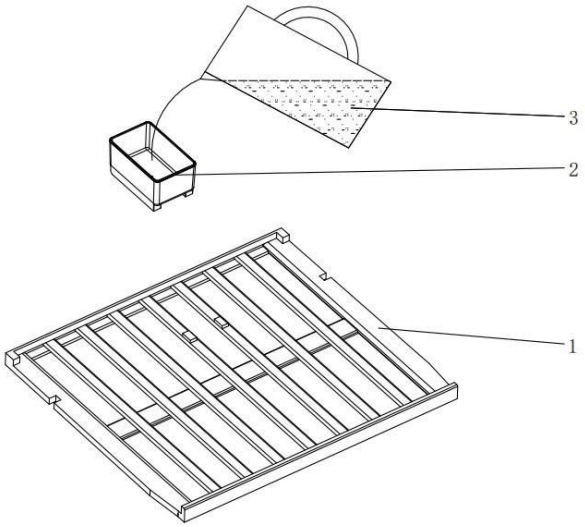

1.Wooden shelf 2.

Humidification box

3. Water

Inject an appropriate amount of water into the humidification box (the water inside the box should not seep out) and place it on the shelf to increase the humidity inside the wine cooler.

Hygrometer

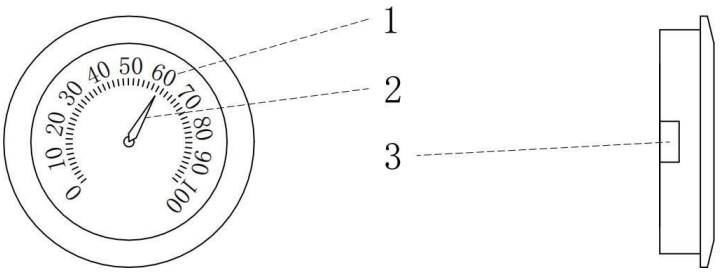

1.Environmental humidity values
2. Pointer
3.Air exchange port

When ensuring that the air exchange port of the hygrometer is unobstructed, the value pointed by the pointer is the humidity value of the current environment.

4.The ideal humidity range for a wine cooler is 50% to 80%.

Daily use

Your wine cellar is equipped with shelves.

Using the shelves

The walls of the wine cellar are equipped with a series of runners so that the shelves can be positioned as desired, along with an anti-tilt system. To remove the shelves, make sure to fully open the door and remember to lift the edge of the shelf to unlock the anti-tilt system.

CARE & CLEANING

Warning! Always unplug your appliance before any maintenance work. Never pull on the power cord, but only on the plug itself.

Cleaning

For hygiene reasons, regularly clean the appliance (side walls and interior and exterior accessories).

- Disconnect the appliance before cleaning.
- Clean the appliance with soft cloth or sponge by water.
- Do not use organic solvents, alkaline detergent, boiling water, washing powder or acid liquid etc.
- Do not flush the compartment of the appliance.
- Clean regularly surfaces that can come in contact with accessible drainage systems.

Important! The below items will damage the surface of wine cooler.



Never clean the appliance with a steam cleaner.

Power cut

Most power cuts could be resolved within a short time. To protect your wines during a power cut, avoid opening the door as much as possible. During very long power cuts, take the necessary measures to protect your wine.

Out of service for long time

Remove all bottles from the appliance, switch off, defrost, clean, dry, and leave the door open to prevent mould developing within the appliance.

If the appliance is disconnected or if there is a power cut, you must wait at least five minutes before re-starting.

Moving the appliance

- Cut off the power supply and unplug the appliance.
- Remove all bottles from the appliance.
- When moving the appliance, do not lean the appliance over 45°.



Replacing the lighting (depending on model):

The light inside the fridge uses a LED. To replace it, please contact your after-sales service or an approved technician.

Troubleshooting



Warning! If there is a fault, unplug your appliance. Only a qualified electrician or competent person may carry out troubleshooting.

If there is a fault during operation, check the following points before calling our approved after-sales service or a qualified professional.

Problem	Solution
The appliance makes a lot of noise.	Adjust the front foot and keep it level.
	Leave a little space between the appliance and the walls.
A trickling noise can be heard inside the compartment.	This noise is normal and is due to how the coolant works inside the appliance.
The appliance does not start.	Check that the appliance is properly plugged in.
	Make sure the power is not cut.
	The compressor restarts 5 minutes after a power cut
The compressor runs continuously.	If it does not produce any cold, contact your reseller's after-sales service.
The door does not close properly.	After a long period of use, the door seal may harden and partially lose its shape. Heat the door seal up with a blow-dryer or hot towel. This softens up the door seal and you will be able to close the door again.
The appliance does not cool sufficiently.	Adjust the temperature.
	Place the appliance away from the sun and any source of heat.
	Avoid opening the door too often
Unpleasant smells are coming form in the compartment.	A slight smell of plastic is normal for new appliances and it will dissipate quickly.
	Clean the compartment and air it out for a few hours.
Condensation forms on the glass door.	Please do not open the door frequently or for a long time.
	Please do not set the temperature too low.
	A high ambient temperature and high humidity may cause condensation
The light is not working.	First check the power source.
	Contact your reseller's after-sales service if the light is broken.

ⓘ Some noises may be heard during normal appliance operation (compressor operating cycle, automatic defrosting, circulation of the refrigerating gas through the appliance, etc.).

If you cannot find the cause of the fault, only call our approved after-sales service or a qualified professional.

Original replacement parts

During servicing, ask for only original spare parts to be used.

The minimum length of time for making available spare parts listed in European Regulation 2019-2019-EU and accessible especially to the appliance user is 10 years under the terms set out in the above regulation.

Guarantee

The manufacturer does not offer a commercial warranty for the refrigerating appliance; please contact your retailer to benefit from the guarantee.