Refrigerator

User manual

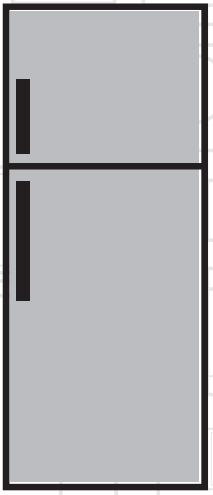

RDNE400K30ZX
RDNE400K30ZW

EN |

beko

Please read this user manual first!

Dear Customer,

We hope that your product, which has been produced in modern plants and checked under the most meticulous quality control procedures, will provide you an effective service.

Therefore, read this entire user manual carefully before using the product and keep it as a reference. If you handover the product to someone else, give the user manual as well.

The user manual will help you use the product in a fast and safe way.

- Read the manual before installing and operating the product.
- Make sure you read the safety instructions.
- Keep the manual in an easily accessible place as you may need it later.
- Read the other documents given with the product.

Remember that this user manual is also applicable for several other models. Differences between models will be identified in the manual.

Explanation of symbols

Throughout this user manual the following symbols are used:

	Important information or useful hints.
	Risk of injury and damage to the property.
	Risk of electric shock.
	Packaging materials of the product are manufactured from recyclable materials in accordance with our National Environment Regulations.

Contents

1 Safety and environment instructions 3

1.1. General safety 3
1.1.1 HC warning 5
1.1.2 For models with water dispenser5
1.2. Intended use..... 6
1.3. Child safety 6
1.4. Compliance with WEEE Directive and Disposing of the Waste Product. 7
1.5. Compliance with RoHS Directive 7
1.6. Package information 7

2 **Your appliance 8**

3 **Installation 9**

3.1. Appropriate installation location 9
3.2. Installing the plastic wedges.... 9
3.3. Adjusting the feet 10
3.4. Electrical connection 10
3.5. Reversing the doors..... 11
3.6. Reversing the doors.....12

4 **Preparation 13**

4.1. Things to be done for energy saving.....13
4.2. Initial use 13

5 **Operating the product 14**

5.1. Temperature setting button ...14
5.2. Fast freeze 14
5.3. Vacation function 15
5.4. Indicator panel.....16
5.5. Indicator panel.....18
5.6. Twist Ice - matic 21
5.7. Ice container.....21
5.8. Egg holder 22
5.9. Fan.....22
5.10 Crisper 22
5.11. Chiller compartment.....22
5.12 Moving door shelf 23
5.13 Sliding storage container 23
5.14. Blue light 23
5.15 Humidity controlled crisper 24
5.16. Auto Icematic 24
5.17. Description and cleaning of odour filter.....25
5.18. Using the water dispenser.....26
5.19. Filling the water dispenser's tank26
5.20. Cleaning the water tank 28
5.21 Drip tray.....29
5.22. Freezing fresh food 30
5.23. Recommendations for preserving the frozen food 31
5.24. Deep-freeze information 31
5.25. Placing the food..... 31
5.26. Door open warning 32
5.27. Changing the door opening direction 32
5.28. Illumination lamp.....32

6 Maintenance and cleaning 33

6.1. Avoiding bad odors 33
6.2. Protecting the plastic surfaces 33
6.3. Door Glasses 33

7 Troubleshooting 35

1 Safety and environment instructions

This section provides the safety instructions necessary to prevent the risk of injury and material damage. Failure to observe these instructions will invalidate all types of product warranty.

1.1. General safety

- This product should not be used by persons with physical, sensory and mental disabilities, without sufficient knowledge and experience or by children. The device can only be used by such persons under supervision and instruction of a person responsible for their safety. Children should not be allowed to play with this device.
- In case of malfunction, unplug the device.
- After unplugging, wait at least 5 minutes before plugging in again.
- Unplug the product when not in use.
- Do not touch the plug with wet hands! Do not pull the cable to plug off, always hold the plug.
- Wipe the power plug's tip with a dry cloth before plugging in.
- Do not plug in the refrigerator if the socket is loose.
- Unplug the product during installation, maintenance, cleaning and repair.
- If the product will not be used for a while, unplug the product and remove any food inside.
- Do not use the product when the compartment with circuit cards located on the upper back part of the product (electrical card box cover) (1) is open.

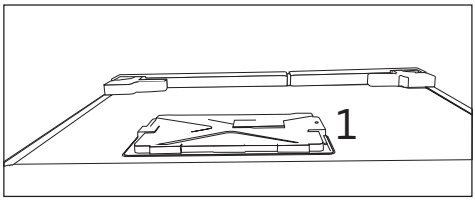

Instructions for safety and environment

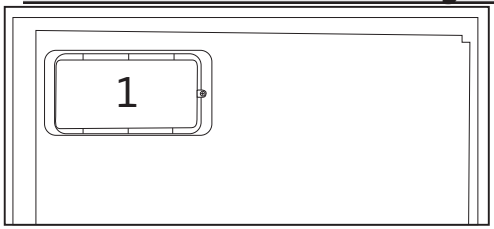

- Do not use steam or steamed cleaning materials for cleaning the refrigerator and melting the ice inside. Steam may contact the electrified areas and cause short circuit or electric shock!
- Do not wash the product by spraying or pouring water on it! Danger of electric shock!
- In case of malfunction, do not use the product, as it may cause electric shock. Contact the authorized service before doing anything.
- Plug the product into an earthed socket. Earthing must be done by a qualified electrician.
- If the product has LED type lighting, contact the authorized service for replacing or in case of any problem.
- Do not touch frozen food with wet hands! It may adhere to your hands!
- Do not place liquids in bottles and cans into the freezer compartment. They may burst out!
- Place liquids in upright position after tightly closing the lid.
- Do not spray flammable substances near the product, as it may burn or explode.
- Do not keep flammable materials and products with flammable gas (sprays, etc.) in the refrigerator.
- Do not place containers holding liquids on top of the product. Splashing water on an electrified part may cause electric shock and risk of fire.

- Exposing the product to rain, snow, sunlight and wind will cause electrical danger. When relocating the product, do not pull by holding the door handle. The handle may come off.
- Take care to avoid trapping any part of your hands or body in any of the moving parts inside the product.
- Do not step or lean on the door, drawers and similar parts of the refrigerator. This will cause the product to fall down and cause damage to the parts.
- Take care not to trap the power cable.

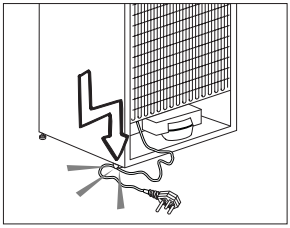

1.1.1 HC warning

If the product comprises a cooling system using R600a gas, take care to avoid damaging the cooling system and its pipe while using and moving the product. This gas is flammable. If the cooling system is damaged, keep the product away from sources of fire and ventilate the room immediately.

The label on the inner left side indicates the type of gas used in the product.

1.1.2 For models with water dispenser

- Pressure for cold water inlet shall be maximum 120 psi (8 bar). If your water pressure exceeds 80 psi (5.5 bar), use a pressure limiting valve in your mains system. If you do not know how to check

your water pressure, ask for the help of a professional plumber.
- If there is risk of water hammer effect in your installation, always use a water hammer prevention equipment in your installation. Consult Professional plumbers is you are not sure that there is no water hammer effect in your installation.
- Do not install on the hot water inlet. Take precautions against of the risk of freezing of the hoses. Water temperature operating interval shall be 33°F (0.6°C) minimum and 100°F (38°C) maximum.
- Use drinking water only.

1.2. Intended use

- This product is designed for home use. It is not intended for commercial use.
- The product should be used to store food and beverages only.
- Do not keep sensitive products requiring controlled temperatures (vaccines, heat sensitive medication, medical supplies, etc.) in the refrigerator.
- The manufacturer assumes no responsibility for any damage due to misuse or mishandling.
- The product's bench life is 10 years. The spare parts necessary for the product to function will be available for this period.

1.3. Child safety

- Keep packaging materials out of children's reach.
- Do not allow the children to play with the product.

- If the product's door comprises a lock, keep the key out of children's reach.

1.4. Compliance with WEEE Directive and Disposing of the Waste Product

This product complies with EU WEEE Directive (2012/19/EU). This product bears a classification symbol for waste electrical and electronic equipment (WEEE).

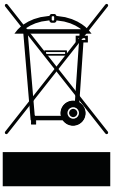

This product has been manufactured with high quality parts and materials which can be reused and are suitable for recycling. Do not dispose of the waste product with normal domestic and other wastes at the end of its service life. Take it to the collection center for the recycling of electrical and electronic equipment. Please consult your local authorities to learn about these collection centers.

1.5. Compliance with RoHS Directive

- This product complies with EU WEEE Directive (2011/65/EU). It does not contain harmful and prohibited materials specified in the Directive.

1.6. Package information

- Packaging materials of the product are manufactured from recyclable materials in accordance with our National Environment Regulations. Do not dispose of the packaging materials together with the domestic or other wastes. Take them to the packaging material collection points designated by the local authorities.

2 Your appliance

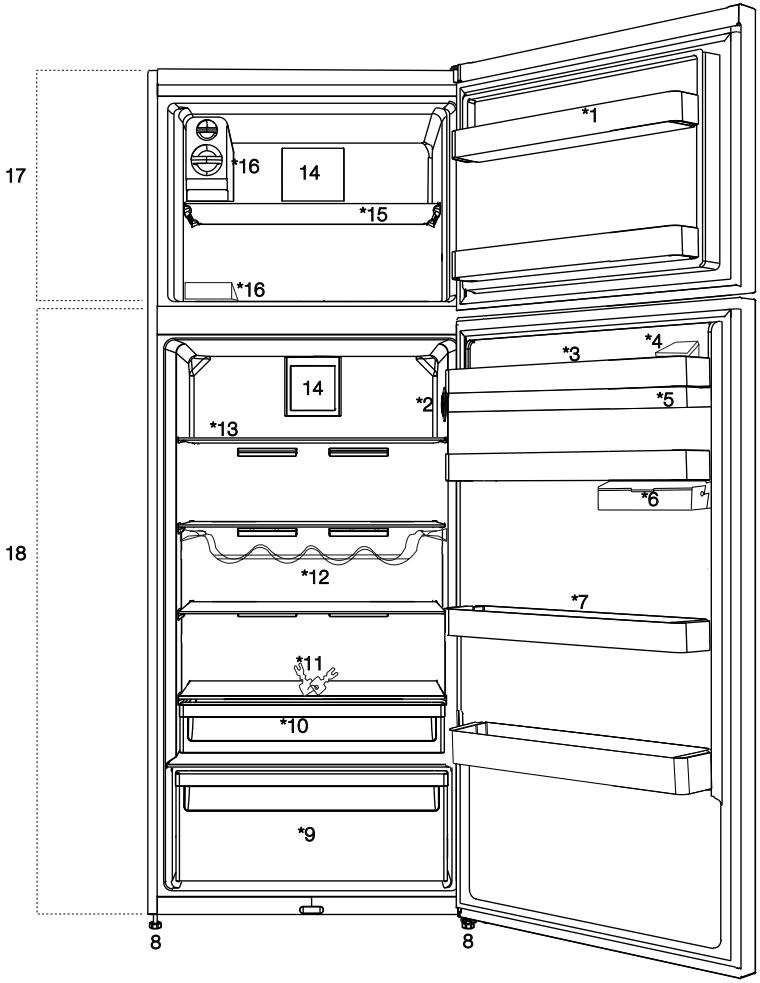

1. Fridge - compartment door shelf
2. Temperature setting button
3. Water dispenser filling tank
4. Egg section
5. Water dispenser reservoir
6. Storage container under the door shelf
7. Moving door shelf
8. Adjustable feet
9. Crisper
10. Chiller compartment
11. Lock and key
12. Bottle shelf
13. Fridge - compartment glass shelf
14. Fan
15. Freezer compartment shelf
16. Icebox / Ice-making compartment
17. Freezer compartment
18. Fridge compartment

***optional:** Figures in this user manual are given as an example and may not match the product exactly. If the relevant parts are not available in the product you purchased, the figure applies to other models.

3 Installation

3.1. Appropriate installation location

Contact an Authorized Service for the installation of the product. In order to prepare the product for use, refer the information in the user manual and ensure that electrical installation and water installation are appropriate. If not, call a qualified electrician and technician to have any necessary arrangements carried out.

	**WARNING:** Manufacturer shall not be held liable for damages that may arise from procedures carried out by unauthorized persons.
	**WARNING:** Product must not be plugged in during installation. Otherwise, there is the risk of death or serious injury!
	**WARNING:** If the door clearance of the room where the product shall be place is so tight to prevent passing of the product, remove the door of the room and pass the product through the door by turning it to its side; if this does not work, contact the authorized service.

- Place the product on an even floor surface to prevent jolts.
- Install the product at least 30 cm away from heat sources such as hobs, heater cores and stoves and at least 5 cm away from electrical ovens.
- Product must not be subjected to direct sun light and kept in humid places.
- Appropriate air ventilation must be provided around your product in order to achieve an efficient operation. If the product is to be placed in a recess in the wall, pay attention to leave at least 5 cm distance with the ceiling and side walls.
- Do not install the product in places where the temperature falls below -5°C.

3.2. Installing the plastic wedges

Plastic wedges supplied with the product are used to create the distance for the air circulation between the product and the rear wall.

1. To install the wedges, remove the screws on the product and use the screws supplied together with the wedges.
2. Insert the 2 plastic wedges onto the rear ventilation cover as illustrated in the figure.

3.3.Adjusting the feet

If the product stands unbalanced after installation, adjust the feet on the front by rotating them to the right or left.

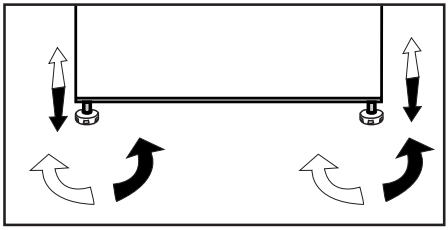

3.4. Electrical connection

	WARNING: Do not make connections via extension cables or multi-plugs.
	WARNING: Damaged power cable must be replaced by the Authorized Service Agent.
	If two coolers are to be installed side by side, there should be at least 4 cm distance between them.

- Our company shall not be liable for any damages that will arise when the product is used without grounding and electrical connection in accordance with the national regulations.
- Power cable plug must be within easy reach after installation.
- Connect your refrigerator to a grounded outlet rated for a voltage value of 220-240V /50 Hz. Outlet shall have 10 to 16A fuse.
- Do not extension cords or cordless multiple outlets between your product and the wall outlet.

Installation

3.5.Reversing the doors

Proceed in numerical order .

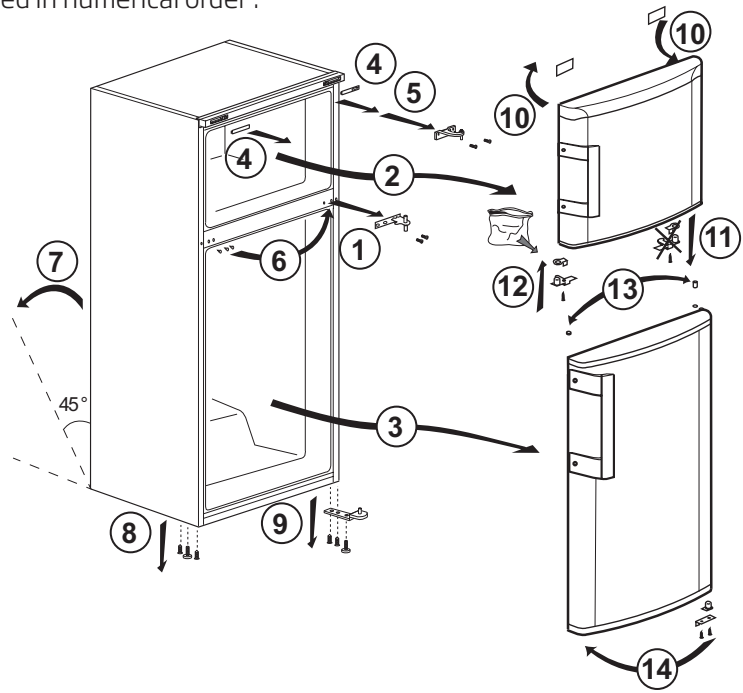

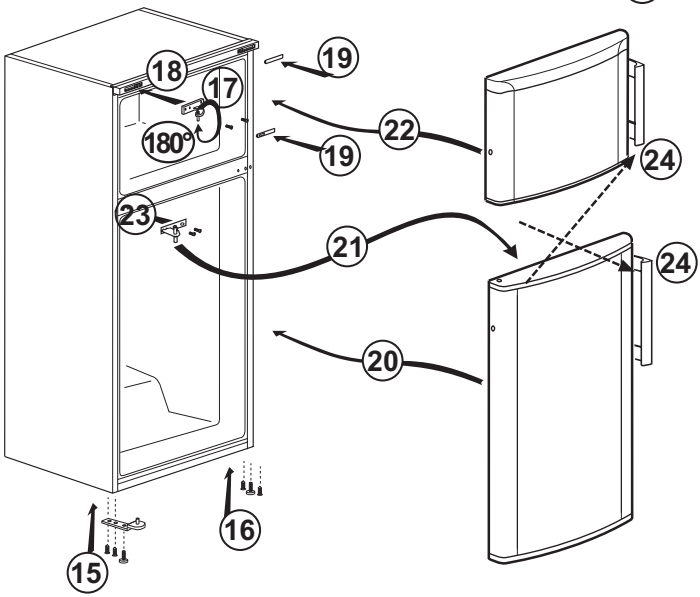

Installation

3.6. Reversing the doors

Proceed in numerical order .

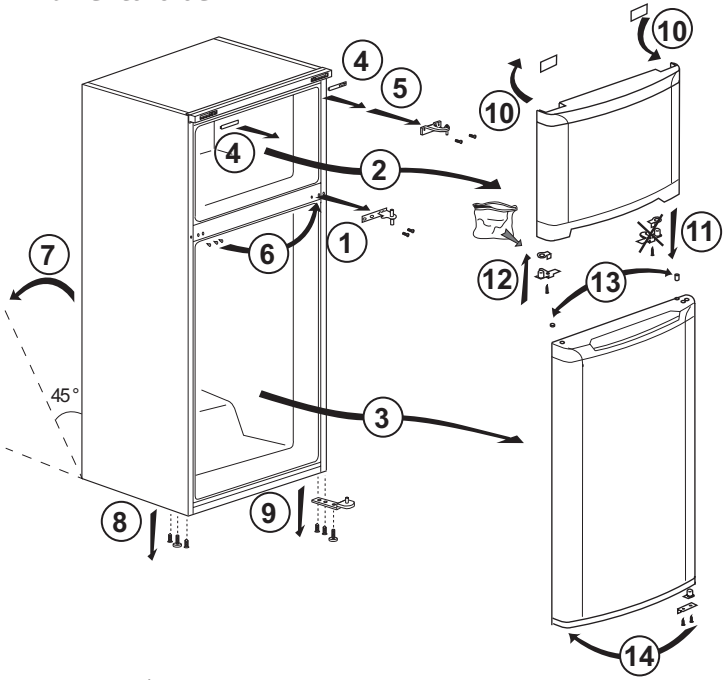

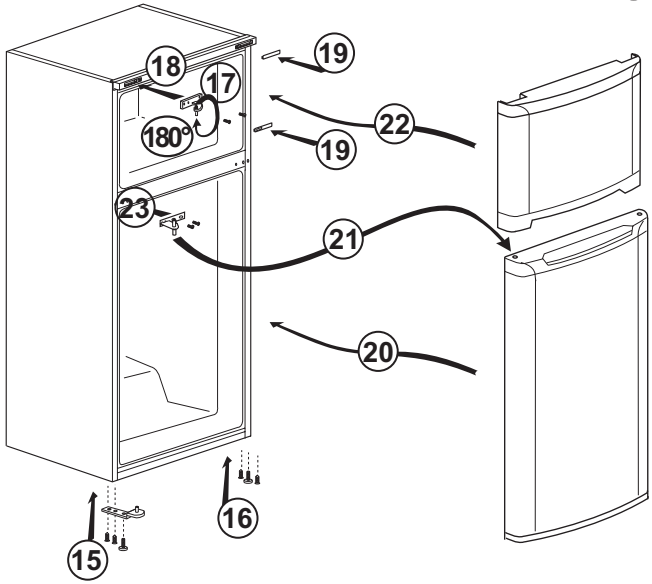

4 Preparation

4.1. Things to be done for energy saving

Connecting the product to electric energy saving systems is risky as it may cause damage on the product.

- Do not leave the doors of your refrigerator open for a long time.
- Do not put hot food or drinks in your refrigerator.
- Do not overload the refrigerator, cooling capacity will fall when the air circulation inside is hindered.
- In order to store maximum amount of food in the freezer compartment, the icematic, available in the freezer compartment and easily removable by hand, shall be taken out. Net volume and energy consumption values declared on the power data plate of your refrigerator are measured and tested by removing the icematic. Do not remove the shelves inside the freezer compartment and on the door of freezer compartment shall not be removed and they shall always be used they provide ease of use and efficiency in energy consumption.
- Airflow should not be blocked by placing foods on the sides of the freezer compartment fan. A minimum distance of 3 cm shall be provided on the sides of protective fan cover.
- The baskets/drawers that are provided with the chill compartment must always be in use for low energy consumption and for better storage conditions.
- Food contact with the temperature sensor in the freezer compartment may increase energy consumption of the appliance. Thus any contact with the sensor(s) must be avoided.
- Depending on the features of your product, thawing frozen food in fridge compartment will both provide energy saving and preserve the food quality.

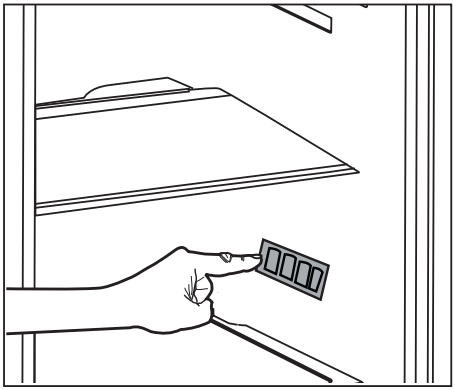

- Do not allow contact of the food with the fridge compartment temperature sensor shown in the figure below.

4.2. Initial use

Before starting to use your refrigerator, ensure that all preparations are made in accordance with the instructions in sections "Instructions for safety and environment" and "Installation".

- Run the product without putting any food for 6 hours and do not open its door unless certainly required.

You will hear a noise when the compressor starts up. The liquids and gases sealed within the refrigeration system may also give rise to noise, even if the compressor is not running and this is quite normal.

Front edges of the product may feel warm. This is normal. These areas are designed to be warm to avoid condensation.

In some models, the instrument panel automatically turns off 5 minutes after the door has closed. It will be reactivated when the door has opened or pressed on any key.

5 Operating the product

5.1. Temperature setting button

The interior temperature of your refrigerator changes for the following reasons;

- Seasonal temperatures,
- Frequent opening of the door and leaving the door open for long periods,
- Food put into the refrigerator without cooling down to the room temperature,
- The location of the refrigerator in the room (e.g. exposing to sunlight).
- You may adjust the varying interior temperature due to such reasons by using the setting button.

The numbers around the control knob indicate the temperature values in "°C".

If the ambient temperature is 25°C, we recommend you to use the temperature control knob of your refrigerator at 4°C. This value may be increased or decreased as required in other ambient temperatures.

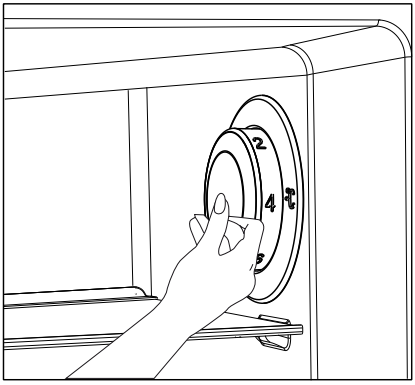

5.2. Fast freeze

If large amounts of fresh food are going to be frozen, adjust the temperature control knob to (❄) max. 24 hours before putting the fresh food in the fast freeze compartment.

It is strongly recommended to keep the knob at this position at least 24 hours to freeze maximum amount of fresh food declared as freezing capacity. Take special care not to mix frozen food and fresh food.

Remember to turn the temperature control knob back to its previous position once food has frozen.

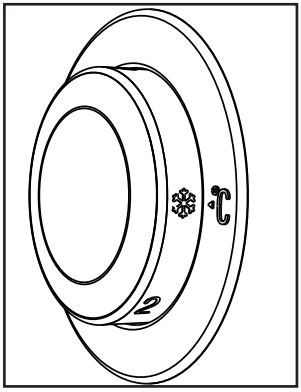

***optional:** Figures in this user manual are given as an example and may not match the product exactly. If the relevant parts are not available in the product you purchased, the figure applies to other models.

5.3. Vacation function

If the doors of the product are not opened for 12 hours after the temperature control knob is switched to the hottest position, then the vacation function will be activated automatically.

To cancel the function, change the knob setting.

It is not recommended to store food in cooler compartment when the vacation function is active.

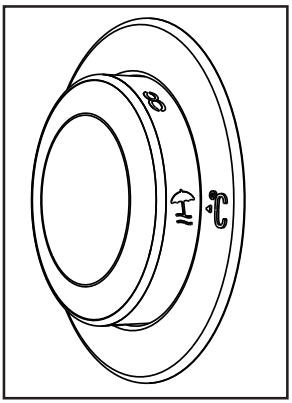

- When the setting operation is completed, you may press the temperature control knob and have it hidden.

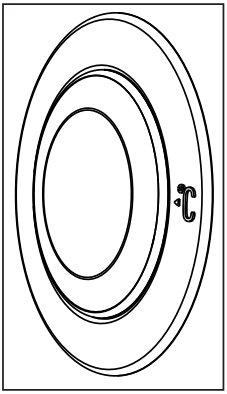

Operating the product

5.4. Indicator panel

Indicator panels may vary according to the product model.

Audio – visual functions on the indicator panel helps you in using your product.

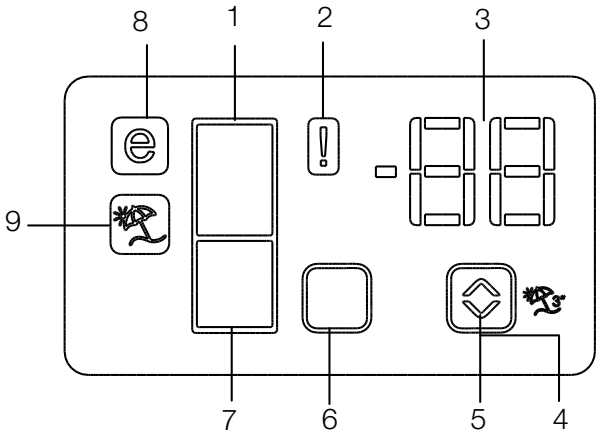

1. Fridge Compartment Indicator
2. Error status indicator
3. Temperature indicator
4. Vacation function button
5. Temperature setting button
6. Compartment selection button
7. Freezer compartment indicator
8. Economy mode indicator
9. Vacation function indicator

***optional**

***optional:**Figures in this user manual are given as an example and may not match the product exactly. If the relevant parts are not available in the product you purchased, the figure applies to other models.

Operating the product

1. Fridge compartment indicator

Fridge compartment light is illuminated while the fridge compartment temperature is set.

2. Error status indicator

If your refrigerator does not perform enough cooling or in case of a sensor fault, this indicator is activated. When this indicator is activated, "E" is displayed on the freezer compartment temperature indicator, and numbers such as "1,2,3..." are displayed on the fridge compartment temperature indicator. These numbers on the indicator inform service personnel about the error.

3. Temperature indicator

Indicates freezer, fridge compartment temperature.

4. Vacation function button

Press on Vacation Button for 3 seconds to activate this function. When the vacation function is activated, "- -" is displayed on the fridge compartment temperature indicator and no active cooling is performed on the fridge compartment. It is not suitable to keep the food in the fridge compartment when this function is activated. Other compartments shall be continued to be cooled as per their set temperature.

To cancel this function press **Vacation** button again.

5. Temperature setting button

Changes the temperature of the relevant compartment between -24°C... -18°C and 8°C...1°C.

6. Compartment selection button

Selection button: Press compartment selection button to switch between fridge and freezer compartments.

7. Freezer compartment indicator

Fridge compartment light is illuminated while the freezer compartment temperature is set.

8. Economy mode indicator

Indicates that the refrigerator operates in energy saving mode. This display shall be activated if the freezer compartment temperature is set to -18°C.

9. Vacation function indicator

Indicates that vacation is activated.

Operating the product

5.5.Indicator panel

Indicator panel allows you to set the temperature and control the other functions related to the product without opening the door of the product. Just press the inscriptions on relevant buttons for function settings.

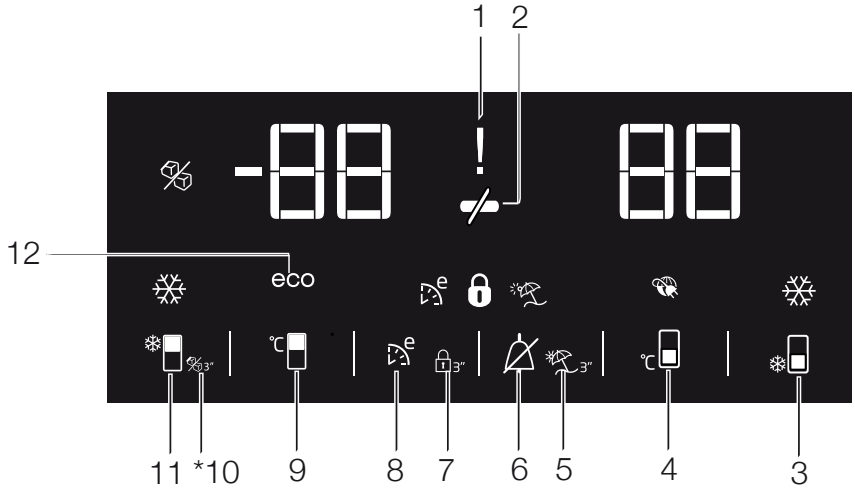

1. Power failure/High temperature / error warning indicator

This indicator ( ) illuminates during power failure, high temperature failures and error warnings. During sustained power failures, the highest temperature that the freezer compartment reaches will flash on the digital display. After checking the food located in the freezer compartment ( ) press the alarm off button to clear the warning.

Please refer to "remedies advised for troubleshooting" section on your manual if you observe that this indicator is illuminated.

2. Energy saving function (display off):

If the product doors are kept closed for a long time energy saving function is automatically activated and energy saving symbol is illuminated. ( )

When energy saving function is activated, all symbols on the display other than energy saving symbol will turn off. When the Energy Saving function is activated, if any button is pressed or the door is opened, energy saving function will be canceled and the symbols on display will return to normal.

***Optional:** Figures in this user manual are schematic and may not match the product exactly. If the subject parts are not included in the product you have purchased, then those parts are valid for other models.

Energy saving function is activated during delivery from factory and cannot be canceled.

3.Quick fridge function

The button has two functions. To activate or deactivate the quick cool function press it briefly. Quick Cool indicator will turn off and the product will return to its normal settings. ( )

	Use quick cooling function when you want to quickly cool the food placed in the fridge compartment. If you want to cool large amounts of fresh food, activate this function before putting the food into the product.
	If you do not cancel it, quick cooling will cancel itself automatically after 8 hours or when the fridge compartment reaches to the required temperature.

	If you press the quick cooling button repeatedly with short intervals, the electronic circuit protection will be activated and the compressor will not start up immediately.

	This function is not recalled when power restores after a power failure.

4. Fridge compartment temperature setting button

Press this button to set the temperature of the fridge compartment to 8, 7,6, 5,4,3, 2, 8... respectively. Press this button to set the fridge compartment temperature to the desired value. ( )

5.Vacation Function

In order to activate vacation function, press the this button ( ) for 3 seconds, and the vacation mode indicator ( ) will be activated. When the vacation function is activated, "- -" is displayed on the fridge compartment temperature indicator and no active cooling is performed on the fridge compartment. It is not suitable to keep the food in the fridge compartment when this function is activated. Other compartments shall be continued to be cooled as per their set temperature.

To cancel this function press **Vacation function** button again.

6. Alarm off warning:

In case of power failure/high temperature alarm, after checking the food located in the freezer compartment press the alarm off button ( ) to clear the warning.

7. Key lock

Press key lock button ( ) simultaneously for 3 seconds. Key lock symbol

( ) will light up and key lock mode will be activated. Buttons will not function if the Key lock mode is active. Press key lock button simultaneously for 3 seconds again. Key lock symbol will turn off and the key lock mode will be exited.

Press the **key lock** button if you want to prevent changing of the temperature setting of the refrigerator ( ).

Operating the product

8. Eco fuzzy

Press and hold eco fuzzy button for 1 seconds to activate eco fuzzy function. Refrigerator will start operating in the most economic mode at least 6 hours later and the economic usage indicator will turn on when the function is active ( ). Press and hold eco fuzzy function button for 3 seconds to deactivate eco fuzzy function.

This indicator is illuminated after 6 hours when eco fuzzy is activated.

9. Freezer compartment temperature setting button

Press this button to set the temperature of the freezer compartment to -18,-19,-20,-21, -22, -23,-24, -18... respectively. Press this button to set the freezer compartment temperature to the desired value.( )

10. Icematic off indicator

Indicates whether the icematic is on or off. ( )If On, then the icematic is not operating. To operate the icematic again press and hold the On-Off button for 3 seconds.

	Water flow from water tank will stop when this function is selected. However, ice made previously can be taken from the icematic.

11. Quick freeze function button/ icematic on-off button

Press this button to activate or deactivate the quick freezing function. When you activate the function, the freezer compartment will be cooled to a temperature lower than the set value. ( )

To turn on and off the icematic press and hold it for 3 seconds.

	Use the quick freeze function when you want to quickly freeze the food placed in fridge compartment. If you want to freeze large amounts of fresh food, activate this function before putting the food into the product.

	If you do not cancel it, Quick Freeze will cancel itself automatically after 4 hours or when the fridge compartment reaches to the required temperature.
	This function is not recalled when power restores after a power failure.

12. Economic usage indicator

Indicates that the product is running in energy-efficient mode. (eco)This indicator will be active if the Freezer Compartment temperature is set to -18 or the energy efficient cooling is being performed due to Eco-Extra function.

	Economic usage indicator is turned off when quick cooling or quick freeze functions are selected.

5.6. Twist Ice - matic

(This feature is optional)

- Remove the water tank by rotating it to the left.
- Open the water tank cover by turning it and add water to the water tank up to the lower part of the water tank cover.
- Place the water tank on its place as shown in the figure after adding water and have it seated by rotating it on the direction of the arrow. Water shall be poured down to the icebank.
- When ice has formed, rotate icebank knob in the direction of the arrow to allow that the ice is dropped down to the ice drawer.
- Take the ice cubes by pulling ice drawer out.
- Pull the front face towards you in order to wash the icebank, and put it on the slides on the interior area and push it to its place in order to replace it.
- Pull the twist icematic unit towards you in order to remove the unit, and put it on the slides on the ceiling and push it to its place in order to replace it.

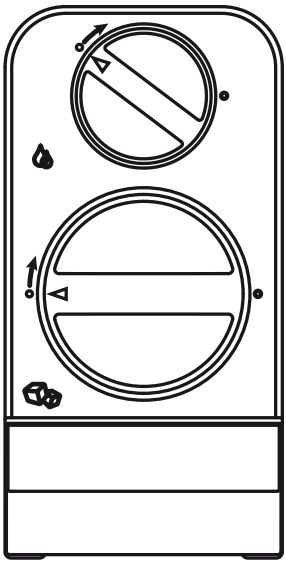

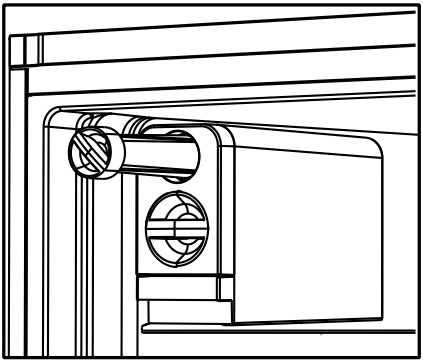

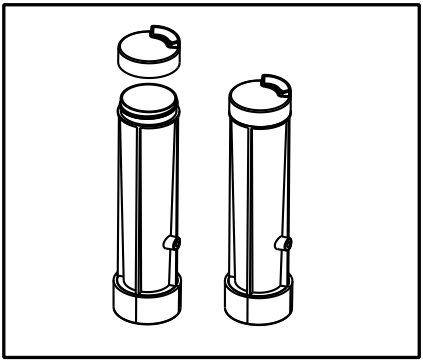

5.7.Ice container

- Remove the ice container from the freezer compartment.
- Fill the ice container with water.
- Place the ice container in the freezer compartment. About two hours later, the ice is ready.

- Remove the ice container from the freezer compartment and bend it over the service plate. Ice cubes will easily fall down to the service plate.

5.8. Egg holder

You can install the egg holder to the desired door or body shelf. If it will be placed on body shelves than the lower cooler shelves are recommended.



Never place the egg holder in the freezer compartment

5.9. Fan

Fan is designed to ensure homogeneous distribution and circulation of the cold air inside your refrigerator. Operation time of the fan may vary depending on the properties of your product.

While the fan works only with the compressor in some products, the control system determines its operation time in some products in accordance with the cooling requirement.

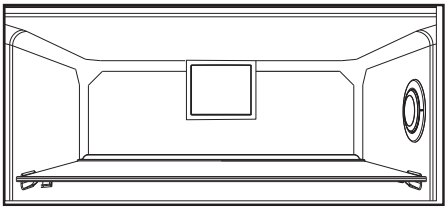

5.10. Crisper

Crisper of the product is designed specially to keep the vegetables fresh without loosing their humidity. For this purpose, cool air circulation is intensified around the crisper in general.

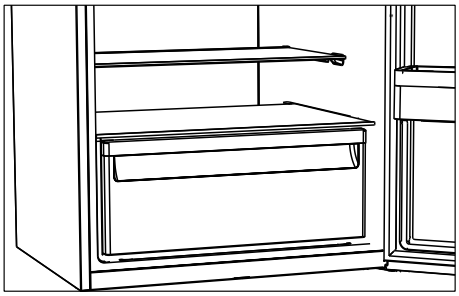

5.11. Chiller compartment

(This feature is optional)

Use this compartment to store delicatessen that shall be stored in a lower temperature or meat products that you will consume in a short time. Chiller compartment is the coolest place in your refrigerator where you can keep dairy products, meat, fish and poultry under ideal storage conditions. Fruits and vegetables should not be stored in this compartment.

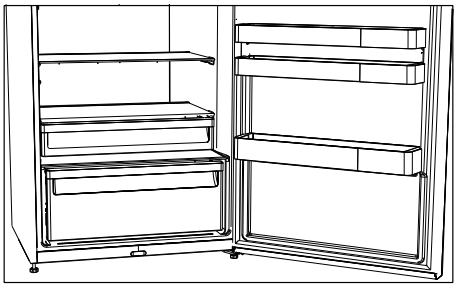

5.12. Moving door shelf

(This feature is optional)

Moving door shelf may be fixed in 3 different positions.

Press the buttons shown in the sides at the same amount in order to move the shelf. Shelf shall be movable.

Move the shelf up or down.

Release the buttons when you have the shelf in the desired position. Shelf shall be fixed on the position where you release the buttons.

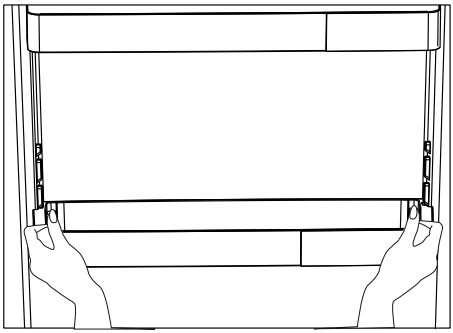

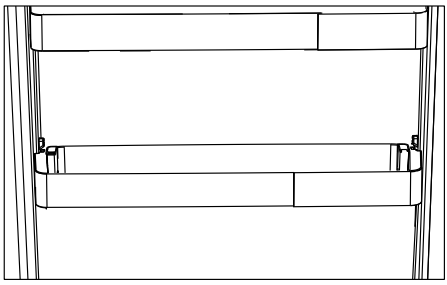

5.13. Sliding storage container

(This feature is optional)

This accessory is designed to increase the usable volume of the door shelves.

It allows you to easily place the tall bottles, jars and tins to the lower bottle shelf thanks to its ability to move right or left.

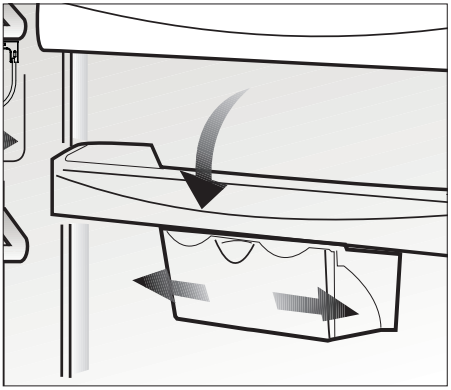

5.14. Blue light

(This feature is optional)

Beko Active Fresh Blue Light TM technology ensures that the process of photosynthesis continues in the refrigerator prolonging the storage life of fresh fruit and vegetables while maintaining their natural flavours and nutrition.

5.15. Humidity controlled crisper

(everfresh)

(This feature is optional)

Humidity rates of the vegetables and fruit are kept under control with the feature of humidity-controlled crisper and the food is ensured to stay fresh for longer.

We recommend you to place the leafy vegetables such as lettuce, spinach and the vegetables which are sensitive to humidity loss, in a horizontal manner as much as possible inside the crisper, not on their roots in a vertical position.

While the vegetables are being placed, specific gravity of the vegetables should be taken into consideration. Heavy and hard vegetables should be put at the bottom of the crisper and the lightweight and soft vegetables should be placed over.

Never leave the vegetables inside the crisper in their bags. If the vegetables are left inside their bags, this will cause them to decompose in a short period of time. In case contacting with other vegetables is not preferred for hygiene concerns, use a perforated paper and other similar packaging materials instead of a bag.

Do not place together the pear, apricot, peach, etc. and apple in particular which have a high level of generation of ethylene gas in the same crisper with the other vegetables and fruit. The ethylene gas which is emitted by these fruit may cause the other fruit to ripen faster and decompose in a shorter time.

5.16. Auto Icematic

(This feature is optional)

The Auto Icematic allows you to make ice in the fridge easily. Remove the water tank in the fridge compartment, fill it wilt water and install it back to obtain ice from the Icematic.

First ice cubes will be ready in approximately 2 hours in the Icematic drawer located in the freezer compartment.

If you fill the water tank completely, you will be able to obtain approximately 60-70 ice cubes.

Change the water in water tank if it has waited around 2-3 weeks.

For the products having automatic Icematic, sound may be heard during ice pouring. This sound is normal and does not signal any error.

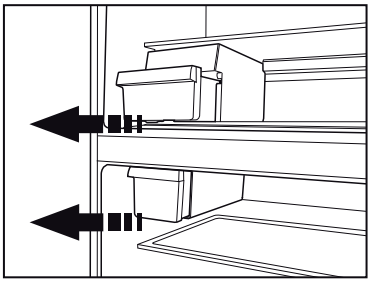

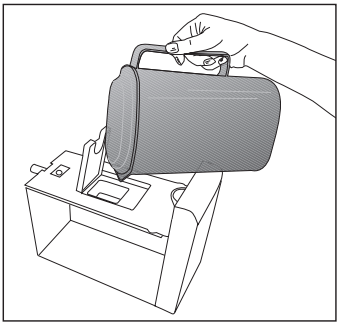

5.17. Description and cleaning of odour filter

(This feature is optional)

Odor filter prevents unpleasant odor build-up in your product.

1. Pull the cover into which the odor filter is installed downwards from the front section and remove as illustrated.
2. Leave the filter under sunlight for one day. Filter will be cleaned during this time.
3. Install the filter back to its place.

Odor filter must be cleaned once in a year.

5.18. Using the water dispenser

***optional**

	It is normal for the first few glasses of water taken from the dispenser to be warm.
	If the water dispenser is not used for a long period of time, dispose of first few glasses of water to obtain fresh water.

1. Push in the lever of the water dispenser with your glass. If you are using a soft plastic cup, pushing the lever with your hand will be easier.
2. After filling the cup up to the level you want, release the lever.

	Please note, how much water flows from the dispenser depends on how far you depress the lever. As the level of water in your cup / glass rises, gently reduce the amount of pressure on the lever to avoid overflow. If you slightly press the arm, the water will drip; this is quite normal and not a failure.

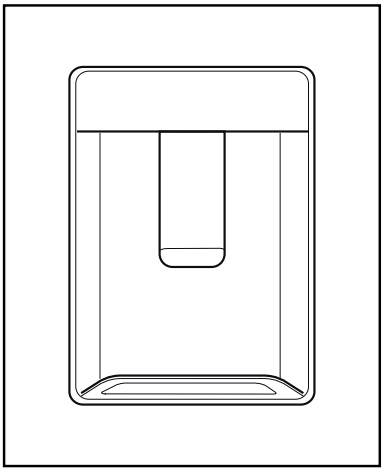

5.19. Filling the water dispenser's tank

Water tank filling reservoir is located inside the door rack.

1. Open the cover of the tank.
2. Fill the tank with fresh drinking water.
3. Close the cover.

	Do not fill the water tank with any other liquid except for water such as fruit juices, carbonated beverages or alcoholic drinks which are not suitable to use in the water dispenser. Water dispenser will be irreparably damaged if these kinds of liquids are used. Warranty does not cover such usages. Some chemical substances and additives contained in these kinds of drinks/liquids may damage the water tank.

Operating the product

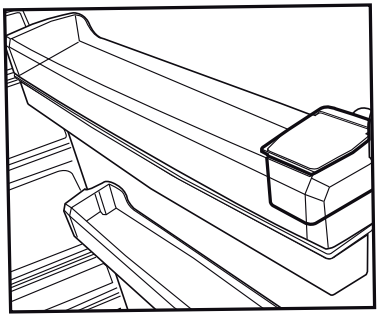

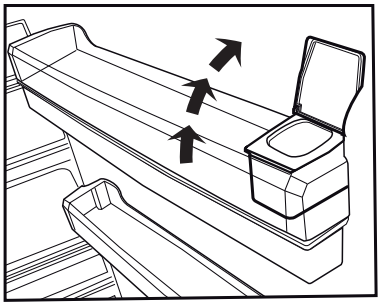

Use clean drinking water only.

Capacity of the water tank is 3 litres; do not overfill.

5.20. Cleaning the water tank

1. Remove the water filling reservoir inside the door rack.
2. Remove the door rack by holding from both sides.
3. Grab the water tank from both sides and remove it with an angle of 45°C.
4. Remove the cover of the water tank and clean the tank.

Components of the water tank and water dispenser should not be washed in dishwasher.

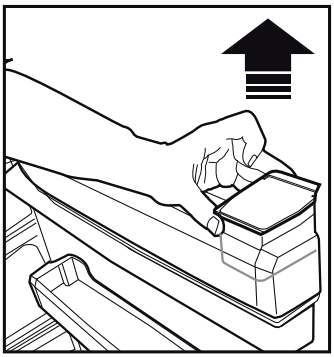

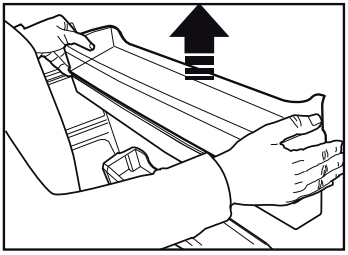

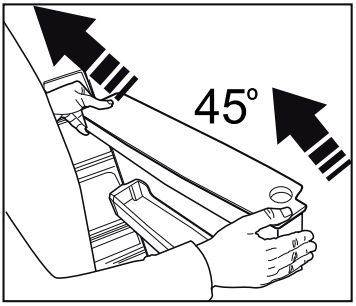

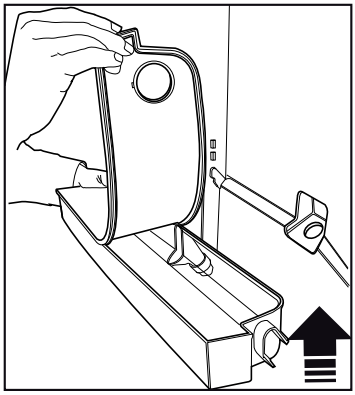

5.21. Drip tray

Water that dripped while using the water dispenser accumulates in the spillage tray.

Remove the plastic filter as shown in the figure.

With a clean and dry cloth, remove the water that has accumulated.

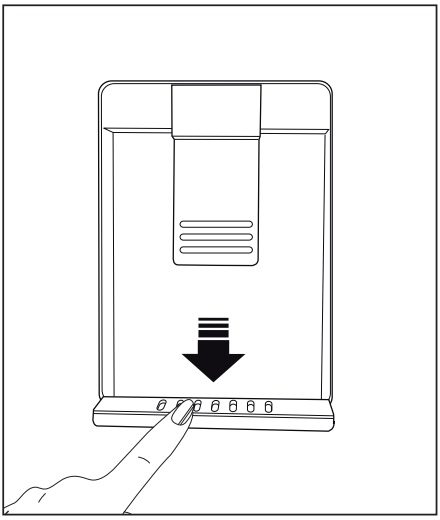

5.22. Freezing fresh food

- In order to preserve the quality of the food, it shall be frozen as quickly as possible when it is placed in the freezer compartment, use the fast freezing feature for this purpose.
- You may store the food longer in freezer compartment when you freeze them while they are fresh.
- Pack the food to be frozen and close the packing so that it would not allow entrance of air.
- Ensure that you pack your food before putting them in the freezer. Use freezer containers, foils and moisture-proof papers, plastic bags and other packing materials instead of traditional packing papers.
- Label each pack of food by adding the date before freezing. You may distinguish the freshness of each food pack in this way when you open your freezer each time. Store the food frozen before in the front side of compartment to ensure that they are used first.



The freezer compartment defrosts automatically.

- Frozen food must be used immediately after they are thawed and they should not be re-frozen.
- Do not freeze too large quantities of food at one time.

Freezer Compartment Setting	Fridge compartment Setting	Remarks
-18°C	4°C	This is the normal recommended setting.
-20,-22 or -24°C	4°C	These settings are recommended when the ambient temperature exceeds 30°C.
Quick Freeze	4°C	Use when you wish to freeze your food in a short time. Your product will return to its previous mode when the process is over.
-18°C or colder	2°C	Use these settings if you think that your fridge compartment is not cold enough because of the hot ambient conditions or frequent opening and closing of the door.

5.23. Recommendations for preserving the frozen food

Compartment shall be set to -18°C at least.

1. Put packages in the freezer as quickly as possible after purchase without allowing the to thaw.
2. Check whether the "Use By" and "Best Before" dates on the packaging are expired or not before freezing it.
3. Ensure that the package of the food is not damaged.

5.24. Deep-freeze information

According to IEC 62552 standards, the product shall freeze at least 4.5 kg of food at 32°C ambient temperature to -18°C or lower within 24 hours for every 100-litres of freezer volume.

It is possible to preserve the food for a long time only at -18°C or lower temperatures.

You can keep the freshness of food for many months (at -18°C or lower temperatures in the deep freeze).

Foods to be frozen should not be allowed to come in contact with the previously frozen items to prevent them from getting thawed partially.

Boil the vegetables and drain their water in order to store vegetables for a longer time as frozen. After draining their water, put them in air-proof packages and place them inside the freezer. Food such as bananas, tomatoes, lettuce, celery, boiled eggs, potatoes are not suitable for freezing. When these foods are frozen, only their nutritional value and taste shall be affected negatively. They shall not be spoiled so that they would create a risk for human health.

5.25. Placing the food

Freezer compartment shelves	Various frozen food such as meat, fish, ice cream, vegetables and etc.
Refrigerator compartment shelves	Food in pans, covered plates and closed containers, eggs (in closed container)
Door shelves of fridge compartment	Small and packaged food or beverage
Crisper	Vegetables and fruits

Fresh zone compartment	Delicatessen (breakfast food, meat products that shall be consumed in a short time)

5.26. Door open warning

(This feature is optional)

An audio warning signal will be given when the door of your product is left open for at least 1 minute. This warning will be muted when the door is closed or any of the display buttons (if any) are pressed.

Door open warning is given to user both visually and acoustically. If the warning continues for 10 minutes, interior lights will be turned off.

5.27. Changing the door opening direction

Door opening direction of your refrigerator can be changed according to the place you are using it.If this is necessary, please call your nearest Authorized Service.

Above description is a general expression.For information on changing the opening direction of the door, you must refer to the warning label located on the inner side of the door.

5.28. Illumination lamp

LED lamps are used as illumination lamps. Contact authorized service in case of any problem with this type of light.

The lamp(s) used in this appliance is not suitable for household room illumination. The intended purpose of this lamp is to assist the user to place foodstuffs in the refrigerator/freezer in a safe and comfortable way.

6 Maintenance and cleaning

Service life of the product is increase if it is regularly cleaned

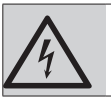

WARNING: First unplug the product before cleaning your refrigerator.

- Never use any sharp and abrasive tools, soap, household cleaners, detergent and wax polish for cleaning.
- Dissolve one teaspoon of carbonate in half liter of water. Soak a cloth with the solution and wrung it thoroughly. Wipe the interior of the appliance with this cloth and the dry thoroughly.
- Make sure that no water enters the lamp housing and other electrical items.
- Clean the door with a damp cloth. To remove door and body shelves, remove all of its contents. Remove door shelves by moving them upwards. After cleaning, slide them from top to bottom to install.
- Never use cleaning agents or water that contain chlorine to clean the outer surfaces and chromium coated parts of the product. Chlorine causes corrosion on such metal surfaces.
- Do not use sharp, abrasive tools, soap, household cleaning agents, detergents, kerosene, fuel oil, varnish etc. to prevent removal and deformation of the prints on the plastic part. Use lukewarm water and a soft cloth for cleaning and then wipe it dry.

6.1. Avoiding bad odors

Materials that may cause odor are not used in the production of our appliances. However, due to inappropriate food preserving conditions and not cleaning the inner surface of the appliance as required can bring forth the problem of odor.

Therefore, clean the refrigerator with carbonate dissolved in water every 15 days.

- Keep the food in closed containers. Microorganisms spreading out from uncovered containers can cause unpleasant odours.
- Never keep the food that have expired best before dates and spoiled in the refrigerator.

6.2. Protecting the plastic surfaces

Clean with arm water immediately as the oil may cause damage on the surface when it is poured on plastic surfaces.

6.3. Door Glasses

Remove the protective foil on the glasses.

There is a coating on the surface of the glasses.This coating minimizes the stain build-up and helps to remove the possible stains and dirt easily.Glasses that are not protected with such a coating may be subject to persistent binding of air or water based organic or inorganic dirt such as limescale, mineral salts, unburned hydrocarbons, metal oxides and silicones that can easily and quickly cause stains or material damage. Keeping the glass clean becomes too difficult despite the regular cleaning. Consequently, the appearance and the transparency of the glass deteriorates. Harsh and corrosive cleaning methods and compounds will intensify these defects and speed up the deterioration process.

Water-based cleaning products that are not alkaline and corrosive must be used for regular cleaning purposes.

Maintenance and cleaning

Non-alkaline and non-corrosive materials must be used for cleaning so that the service life of this coating lasts for a long time.

These glasses are tempered to increase their durability against impacts and breaking.

A safety film is also applied to their rear surfaces as an extra safety measure in order to prevent them from causing damage to their surrounding in case of a breakage.

*Alkali is a base that forms hydroxide ions (OH^-) when it is dissolved in water.

Li (Lithium), Na (Sodium), K (Potassium) Rb (Rubidium), Cs (Cesium) and artificial and radioactive Fr (Fan-sium) metals are called ALKALI METALS.

7 Troubleshooting

Check this list before contacting the service. Doing so will save you time and money. This list includes frequent complaints that are not related to faulty workmanship or materials. Certain features mentioned herein may not apply to your product.

The refrigerator is not working.

- The power plug is not fully seated. > > > Plug it in to seat completely into the socket.
- The fuse connected to the socket powering the product or the main fuse is blown. > > > Check the fuses.

Condensation on the side wall of the cooler compartment (MULTI ZONE, COOL, CONTROL and FLEXI ZONE).

- The environment is too cold. > > Do not install the product in environments with temperatures below -5°C.
- The door is opened too frequently > > > Take care not to open the product's door too frequently.
- The environment is too humid. > > > Do not install the product in humid environments.
- Foods containing liquids are kept in unsealed holders. > > > Keep the foods containing liquids in sealed holders.
- The product's door is left open. > > > Do not keep the product's door open for long periods.
- The thermostat is set to too low temperature. > > > Set the thermostat to appropriate temperature.

Compressor is not working.

- In case of sudden power failure or pulling the power plug off and putting back on, the gas pressure in the product's cooling system is not balanced, which triggers the compressor thermic safeguard. The product will restart after approximately 6 minutes. If the product does not restart after this period, contact the service.
- Defrosting is active. > > > This is normal for a fully-automatic defrosting product. The defrosting is carried out periodically.
- The product is not plugged in. > > > Make sure the power cord is plugged in.
- The temperature setting is incorrect. > > > Select the appropriate temperature setting.
- The power is out. > > > The product will continue to operate normally once the power is restored.

The refrigerator's operating noise is increasing while in use.

- The product's operating performance may vary depending on the ambient temperature variations. This is normal and not a malfunction.

The refrigerator runs too often or for too long.

Troubleshooting

- The new product may be larger than your previous one. Larger products will run for longer periods.
- The room temperature may be high. > > > The product will normally run for long periods in higher room temperature.
- The product may have been recently plugged in or a new food item is placed inside. > > > The product will take longer to reach the set temperature when recently plugged in or a new food item is placed inside. This is normal
- Large quantities of hot food may have been recently placed into the product. > > > Do not place hot food into the product.
- The doors were opened frequently or kept open for long periods. > > > The warm air moving inside will cause the product to run longer. Do not open the doors too frequently.
- The freezer or cooler door may be ajar. > > > Check that the doors are fully closed.
- The product may be set to temperature too low. > > > Set the temperature to a higher degree and wait for the product to reach the adjusted temperature.
- The cooler or freezer door washer may be dirty, worn out, broken or not properly settled. > > > Clean or replace the washer. Damaged / torn door washer will cause the product to run for longer periods to preserve the current temperature.

The freezer temperature is very low, but the cooler temperature is adequate.

- The freezer compartment temperature is set to a very low degree. > > > Set the freezer compartment temperature to a higher degree and check again.

The cooler temperature is very low, but the freezer temperature is adequate.

- The cooler compartment temperature is set to a very low degree. > > > Set the freezer compartment temperature to a higher degree and check again.

The food items kept in cooler compartment drawers are frozen.

- The cooler compartment temperature is set to a very low degree. > > > Set the freezer compartment temperature to a higher degree and check again.

The temperature in the cooler or the freezer is too high.

- The cooler compartment temperature is set to a very high degree. > > > Cooler compartment temperature setting has an effect on the freezer compartment temperature. Change the temperature of the cooler or freezer compartment and wait until the temperature of the related compartments come to the adequate level.
- The doors were opened frequently or kept open for long periods. > > > Do not open the doors too frequently.
- The door may be ajar. > > > Fully close the door.
- The product may have been recently plugged in or a new food item is placed inside. > > > This is normal. The product will take longer to reach the set temperature when recently plugged in or a new food item is placed inside.
- Large quantities of hot food may have been recently placed into the product. > > > Do not place hot food into the product.

Shaking or noise.

Troubleshooting

- The ground is not level or durable. > > > If the product is shaking when moved slowly, adjust the stands to balance the product. Also make sure the ground is sufficiently durable to bear the product.
- Any items placed on the product may cause noise. > > > Remove any items placed on the product.

The product is making noise of liquid flowing, spraying etc.

- The product's operating principles involve liquid and gas flows. > > > This is normal and not a malfunction.

There is sound of wind blowing coming from the product.

- The product uses a fan for the cooling process. This is normal and not a malfunction.

There is condensation on the product's internal walls.

- Hot or humid weather will increase icing and condensation. This is normal and not a malfunction.
- The doors were opened frequently or kept open for long periods. > > > Do not open the doors too frequently; if open, close the door.
- The door may be ajar. > > > Fully close the door.

There is condensation on the product's exterior or between the doors.

- The ambient weather may be humid, this is quite normal in humid weather. > > > The condensation will dissipate when the humidity is reduced.

The interior smells bad.

- The product is not cleaned regularly. > > > Clean the interior regularly using sponge, warm water and carbonated water.
- Certain holders and packaging materials may cause odour. > > > Use holders and packaging materials without free of odour.
- The foods were placed in unsealed holders. > > > Keep the foods in sealed holders. Microorganisms may spread out of unsealed food items and cause malodour.
- Remove any expired or spoilt foods from the product.

The door is not closing.

- Food packages may be blocking the door. > > > Relocate any items blocking the doors.
- The product is not standing in full upright position on the ground. > > > Adjust the stands to balance the product.
- The ground is not level or durable. > > > Make sure the ground is level and sufficiently durable to bear the product.

The vegetable bin is jammed.

- The food items may be in contact with the upper section of the drawer. > > > Reorganize the food items in the drawer.



WARNING: If the problem persists after following the instructions in this section, contact your vendor or an Authorised Service. Do not try to repair the product.



57 5210 0000/AN

www.beko.com.au