Use & Care Manual

Side by Side

Refrigerator

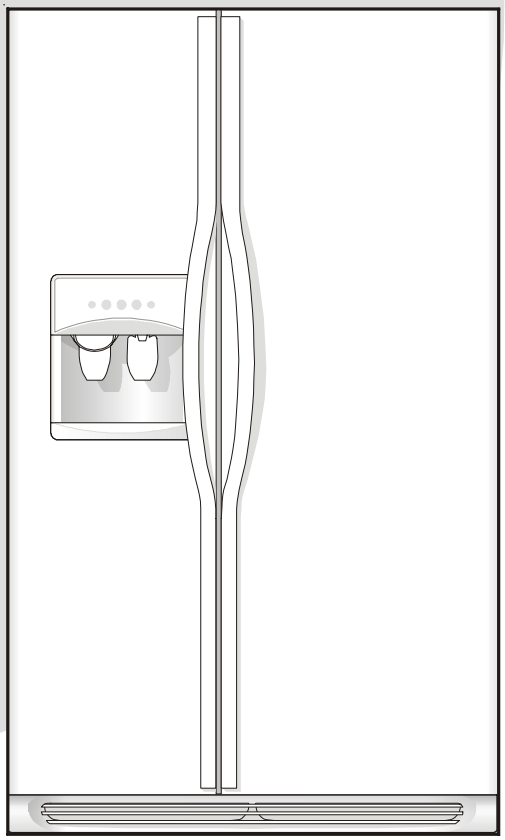

Got Questions?
Need Parts or Service?



Before Calling Your Local Repair Service - CALL:

Electrolux
Solutions Hotline

(United States)
1-800-944-9044
(Canada)
1-800-668-4606

- √ **Resolve many service issues over the phone at your convenience!**
- √ **If we can't resolve your service issue, we'll schedule a reputable local service technician for you!**
- √ **Order Genuine Electrolux Parts & Accessories**
- √ **Purchase Extended Warranty Protection**

Important Safety Instructions 2
Installation 3
Connecting Water Supply 4
Door Removal Instructions 5
Temperature Controls 6
Automatic Ice & Water Dispenser 8
Replacing Air Filter 13
Normal Operating Sounds & Sights ... 14
Care and Cleaning 15
Warranty 16
Before you Call 17
Features at a Glance 21

READ AND SAVE THESE INSTRUCTIONS

PN: 241857500 (April 2007)

IMPORTANT SAFETY INSTRUCTIONS

WARNING

Please Read All Instructions Before Using This Refrigerator.

FOR YOUR SAFETY

- Do not store or use gasoline, or other flammable liquids in the vicinity of this or any other appliance. Read product labels for warnings regarding flammability and other hazards.
- Do not operate the refrigerator in the presence of explosive fumes.
- Avoid contact with any moving parts of automatic ice maker.
- Remove all staples from the carton. Staples can cause severe cuts, and also destroy finishes if they come in contact with other appliances or furniture.

CHILD SAFETY

Destroy or recycle the carton, plastic bags, and any exterior wrapping material immediately after the refrigerator is unpacked. Children should **NEVER** use these items to play. Cartons covered with rugs, bedspreads, plastic sheets or stretch wrap may become airtight chambers, and can quickly cause suffocation.

PROPER DISPOSAL OF YOUR REFRIGERATOR OR FREEZER

Risk of child entrapment

Child entrapment and suffocation are not problems of the past. Junked or abandoned refrigerators or freezers are still dangerous – even if they will sit for "just a few days." If you are getting rid of your old refrigerator or freezer, please follow the instructions below to help prevent accidents.

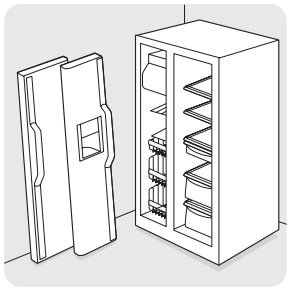

Before you throw away your old refrigerator/ freezer:

- Remove doors.
- Leave shelves in place so children may not easily climb inside.
- Have refrigerant removed by a qualified service technician.

WARNING

These Guidelines Must Be Followed To Ensure That Safety Mechanisms In This Refrigerator Will Operate Properly.

ELECTRICAL INFORMATION

- **The refrigerator must be plugged into its own dedicated 115 Volt, 60 Hz., 15 Amp, AC only electrical outlet.** The power cord of the appliance is equipped with a three-prong grounding plug for your protection against electrical shock hazards. It must be plugged directly into a properly grounded three prong receptacle. The receptacle must be installed in accordance with local codes and ordinances. Consult a qualified electrician. Avoid connecting refrigerator to a Ground Fault Interruptor (GFI) circuit. **Do not use an extension cord or adapter plug.**
- If the power cord is damaged, it should be replaced by an authorized service technician to prevent any risk.
- Never unplug the refrigerator by pulling on the power cord. Always grip the plug firmly, and pull straight out from the receptacle to prevent damaging the power cord.
- Unplug the refrigerator before cleaning and before replacing a light bulb to avoid electrical shock.
- Performance may be affected if the voltage varies by 10% or more. Operating the refrigerator with insufficient power can damage the compressor. Such damage is not covered under your warranty.
- Do not plug the unit into an electrical outlet controlled by a wall switch or pull cord to prevent the refrigerator from being turned off accidentally.

IMPORTANT

Pressing and holding the **On/Off** button for 3 seconds, located on the left side of the temperature control panel (Electronic controls), or turning the Freezer and Fresh Food controls to "0" (Mechanical controls) will disable your refrigerator's cooling system, but does not disconnect the power to the light bulb and other electrical components. To turn off power to your refrigerator you must unplug the power cord from the electrical outlet.

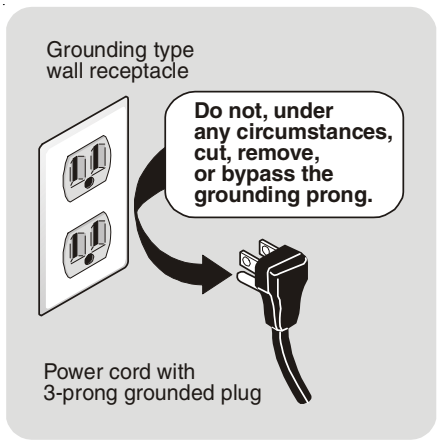

CAUTION

To avoid personal injury or property damage, handle tempered glass shelves carefully. Shelves may break suddenly if nicked, scratched, or exposed to sudden temperature change.

INSTALLATION

This Use & Care Manual provides general operating instructions for your model. Use the refrigerator only as instructed in this Use & Care Manual. **Before starting the refrigerator, follow these important first steps.**

LOCATION

- Choose a place that is near a grounded electrical outlet. **Do Not** use an extension cord or an adapter plug.
- If possible, place the refrigerator out of direct sunlight and away from the range, dishwasher or other heat sources.
- The refrigerator must be installed on a floor that is level and strong enough to support a fully loaded refrigerator.
- Consider water supply availability for models equipped with an automatic ice maker.

INSTALLATION

⚠ CAUTION

Do Not install the refrigerator where the temperature will drop below 55°F (13°C) or rise above 110°F (43°C). The compressor will not be able to maintain proper temperatures inside the refrigerator.

Do Not block the toe grille on the lower front of your refrigerator. Sufficient air circulation is essential for the proper operation of your refrigerator.

Installation Clearances

- Allow the following clearances for ease of installation, proper air circulation, and plumbing and electrical connections:

  Sides & Top ---------- 3/8”

  Back---------- 1”

DOOR OPENING

NOTE

If your refrigerator is placed with the door hinge side against a wall, you may have to allow additional space so the door can be opened wider.

Your refrigerator should be positioned to allow easy access to a counter when removing food. For best use of drawers and freezer baskets, the refrigerator should be in a position where both the refrigerator and freezer doors can be fully opened.

LEVELING

All four corners of your refrigerator must rest firmly on a solid floor. Your refrigerator is equipped with adjustable front rollers to help level your unit. To ensure proper door seal and assist door closing, the refrigerator should be tilted 1/4” (6 mm), front to back.

To Level Your Refrigerator:

1. Remove toe grille. (See *“To Remove Toe Grille”* .)
2. Use flat-blade screwdriver or 3/8” socket wrench to adjust front rollers.

NOTE

The refrigerator doors are designed to shut by themselves within a 20 degree opening.

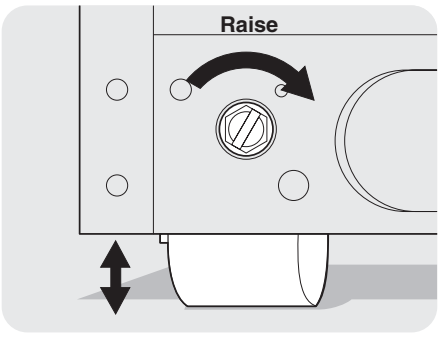

3. Check both doors to be sure seals touch cabinet on all four sides.

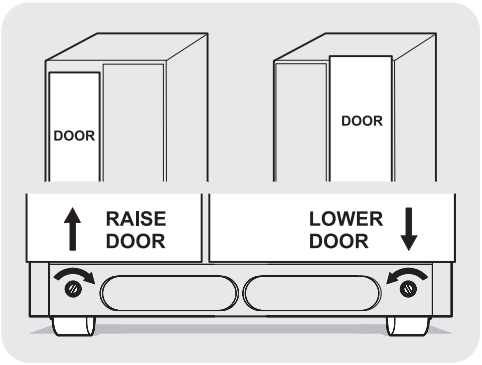

CONNECTING HOUSEHOLD WATER SUPPLY TO REFRIGERATOR

⚠ WARNING

To avoid electric shock, which can cause death or severe personal injury, disconnect the refrigerator from electrical power before connecting a water supply line to the refrigerator.

⚠ CAUTION

To Avoid Property Damage:

- **Copper tubing is recommended for the water supply line. Water supply tubing made of ¼" plastic is not recommended since it greatly increases the potential for water leaks. Manufacturer will not be responsible for any damage if plastic tubing is used for supply line.**
- **DO NOT install water supply tubing in areas where temperatures fall below freezing.**
- **Chemicals from a malfunctioning softener can damage the ice maker. If the ice maker is connected to soft water, ensure that the softener is maintained and working properly.**

IMPORTANT

Ensure that your water supply line connections comply with all local plumbing codes.

Before Installing The Water Supply Line, You Will Need:

- **Basic Tools:** adjustable wrench, flat-blade screwdriver, and Phillips™ screwdriver
- Access to a household cold water line with water pressure between 30 and 100 psi.
- A water supply line made of ¼ inch (6.4 mm) OD, copper tubing. To determine the length of copper tubing needed, you will need to measure the distance from the ice maker inlet valve at the back of the refrigerator to your cold water pipe. Then add approximately 7 feet (2.1 meters), so the refrigerator can be moved out for cleaning (as shown).
- A shutoff valve to connect the water supply line to your household water system. **DO NOT** use a self-piercing type shutoff valve.
- A compression nut and ferrule (sleeve) for connecting the water supply line to the ice maker inlet valve.

NOTE

Water line kit number 5303917950, available from your appliance dealer at additional cost, contains 25 feet (7.6 meters) of ¼ inch OD copper tubing, a saddle type shutoff valve (nonpiercing), (2) ¼ inch brass compression nuts, (2) ferrules/sleeves, and instructions for installing a water supply line.

To Connect Water Supply Line To Ice Maker Inlet Valve

1. Disconnect refrigerator from electric power source.
2. Place end of water supply line into sink or bucket. Turn ON water supply and flush supply line until water is clear. Turn OFF water supply at shutoff valve.
3. Unscrew plastic cap from water valve inlet and discard cap.
4. Slide brass compression nut, then ferrule (sleeve) onto water supply line, as shown.
5. Push water supply line into water valve inlet as far as it will go (¼ inch). Slide ferrule (sleeve) into valve inlet and finger tighten compression nut onto valve. Tighten another half turn with a wrench; **DO NOT** over tighten.
6. With steel clamp and screw, secure water supply line to rear panel of refrigerator as shown.
7. Coil excess water supply line (about 2½ turns) behind refrigerator as shown and arrange coils so they do not vibrate or wear against any other surface.
8. Turn ON water supply at shutoff valve and tighten any connections that leak.
9. Reconnect refrigerator to electrical power source.
10. To turn ice maker on, lower wire signal arm (side mounted) or set the ice maker's On/Off power switch to the "**I**" position (rear mounted).

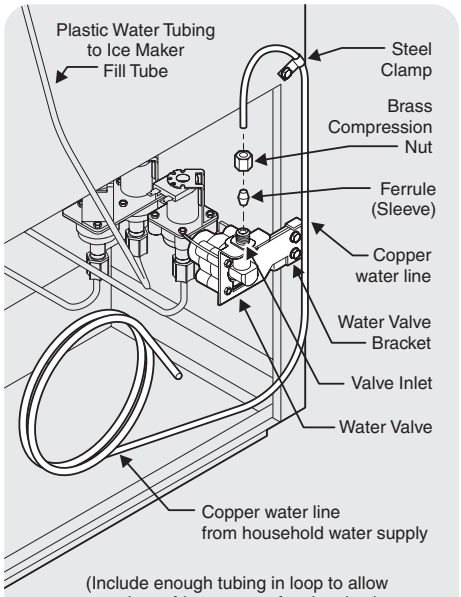

(Include enough tubing in loop to allow moving refrigerator out for cleaning.)

IMPORTANT

After connecting the water supply, refer to *"How to Prime the Water Supply System"* for important information about priming an empty water supply system.

Your refrigerator's water supply system includes several tubing lines, a water filter, a water valve and a water tank. To ensure that your water dispenser works properly, this system must be completely filled with water when your refrigerator is first connected to the household water supply line.

DOOR REMOVAL INSTRUCTIONS

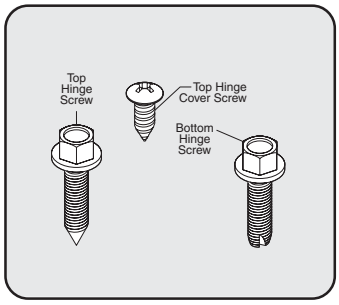

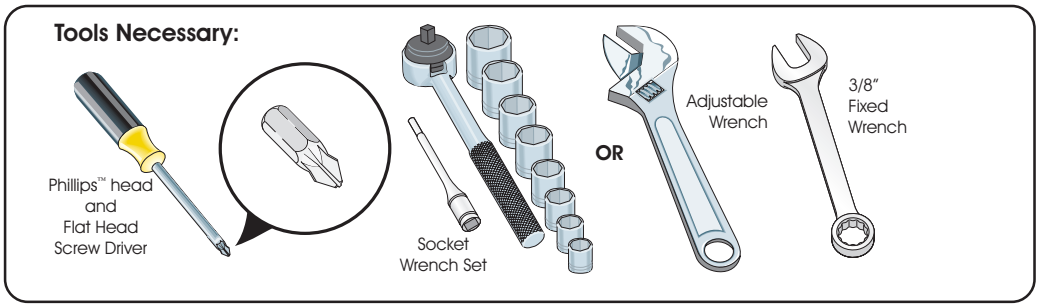

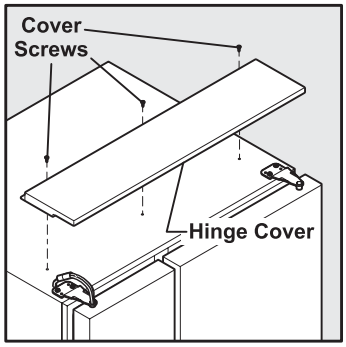

OR

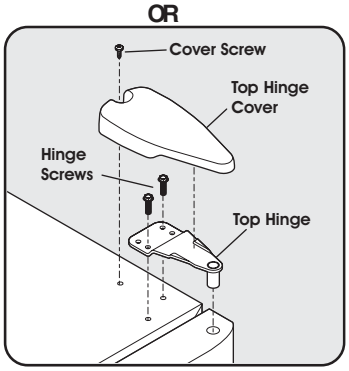

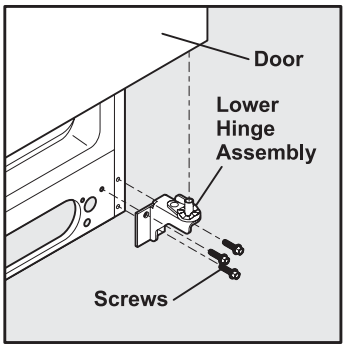

DOOR REMOVAL INSTRUCTIONS:

If it is necessary to move the refrigerator through narrow doorways, follow these steps to remove the doors.

Before you start:

1 Make sure the electrical power cord is unplugged from the wall outlet.

2 Remove any food from the door shelves.

3 Close the doors.

To remove the hinge cover: (some models)

1 Remove the three screws from the cover over the top door hinges.

2 Pull the cover forward about a half inch and lift it off.

To remove the refrigerator door:

1 Remove top hinge cover screw on refrigerator door and remove cover. (some models)

2 Trace lightly around the door's top hinge with a pencil. This makes reinstallation easier.

3 Remove the two screws from the top hinge. Lift the door off of the bottom hinge and set it aside.

4 Remove the three bottom hinge screws and hinge, if necessary.

To remove the freezer door:

1 Detach the multi-wire cable connector located above the top hinge. Grasp both sides of the connector firmly and pull apart.

2 Remove top hinge cover screw on freezer door and remove cover. (some models)

3 Trace lightly around the door's top hinge with a pencil. This makes reinstallation easier.

4 Detach the water tube from the connector located below the freezer door. The connector releases when you press its outer sleeve inward.

5 Remove the screws from the top hinge and pull the multi-wire cable through it.

6 Lift the door off of the bottom hinge. Lay the door on its side to avoid damage to the Remove the three bottom hinge screws and hinge, if necessary.

To reinstall the refrigerator and freezer doors, reverse the above steps.

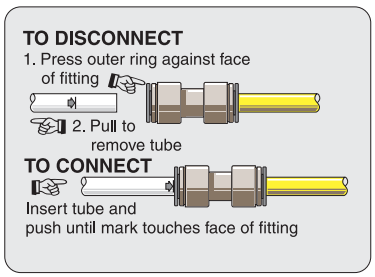

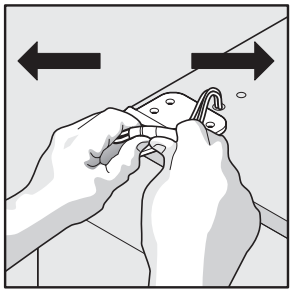

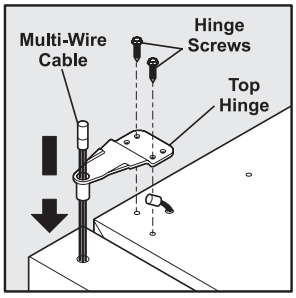

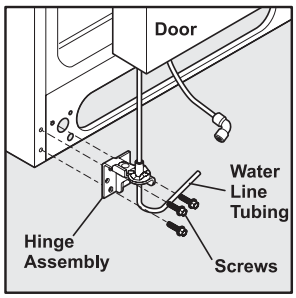

TEMPERATURE CONTROLS

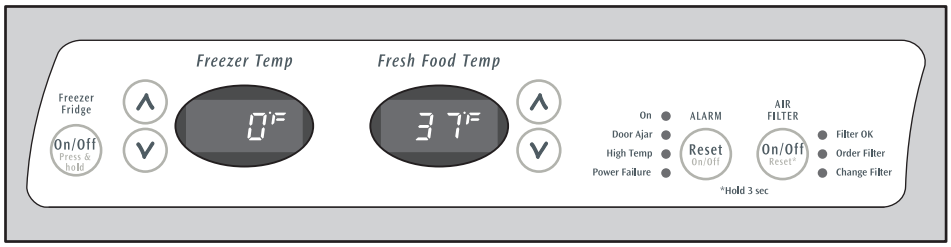

NOTE

The advanced electronic control system in your refrigerator includes additional display modes that service professionals can use to rapidly diagnose performance issues.

ALLOWING COOLING TIME BEFORE USE

To ensure safe food storage, allow your refrigerator to operate with the doors closed for at least 8 to 12 hours before placing food inside. During this cooling period, you do not need to adjust the controls, which are preset at the factory.

SETTING COOLING TEMPERATURES

Your refrigerator comes with a state-of-the-art electronic digital control system. The system's control panel is located at the top of the the fresh food compartment.

The two digital displays on the left half of the control panel indicate the current settings or temperatures of your freezer and fresh food compartments. The models with a 2-digit temperature display are for reference only, and do not display the current accurate compartment temperature. Should you desire to see what the current accurate temperature is, place a separate thermometer inside the freezer or fresh food compartment in the desired location.

TEMPERATURE ADJUSTMENT

After 24 hours, adjust the controls as needed. Make your adjustments small and gradual; allowing time for temperatures to change and stabilize. Refer to the adjacent guidelines for temperature settings.

To adjust the temperature to a higher or lower setting, press the **Up** or **Down** button closest to the display. The first time you press the button, the display shows the last setting you entered. Each press of the button after that increments the setting by one degree.

The display shows your new setting momentarily, then changes back to the current temperature.

Temperature Adjustment Guide

If Fresh Food compartment is too warm	Adjust Fresh Food control one degree colder by pressing **Down (Colder)** button.
If Fresh Food compartment is too cold	Adjust Fresh Food control one degree warmer by pressing the **Up (Cold)** button.
If Freezer compartment is too warm	Adjust Freezer control one degree colder by pressing **Down (Colder)** button.
If Freezer compartment is too cold	Adjust Freezer control one degree warmer by pressing the **Up (Cold)** button.

IF TEMPERATURE DISPLAYS FLASH...

If ever you see both temperature displays continously flashing, it may indicate that the control system has detected a performance problem. Call your service representative, who can interpret the flashing message.

To maintain temperatures, a fan circulates air in the refrigerator and freezer compartments. For good circulation, do not block cold air vents with food items.

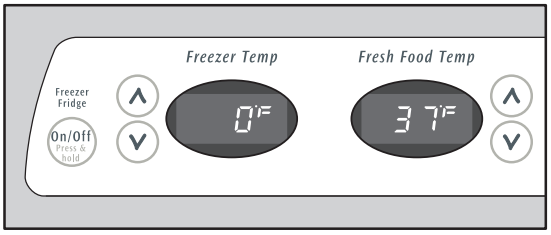

Temperature Display (2-Digit)

	Freezer		Fresh Food	
	F°	*C°*	*F°*	*C°*
Warmest	6°	-14°	47°	8°
Factory Setting	0°	-18°	37°	3°
Coldest	-6°	-21°	33°	1°

AIR FILTER INDICATOR & STATUS LIGHTS

Your refrigerator's air filter needs to be replaced from time to time. You can monitor the need for replacement by referring to the status light while the air filter is "ON". To turn on the air filter, press the "Air Filter" button. To turn off the air filter, press the "Air Filter" button. To RESET the air filter, press the "Air Filter" button and hold for 3 seconds.

CAUTION - SOME MODELS

The alarm system does not automatically reset if you disconnect and reconnect your refrigerator's power cord. It can only be reactivated by pressing the Alarm Reset button.

Air Filter Status Light (not available on all models)

Green	**Filter OK.**
Yellow	**Air filter is about 80 percent used. Please order new one.**
Red	**Air filter is 100 percent used. Please change now.**

TEMPERATURE CONTROLS

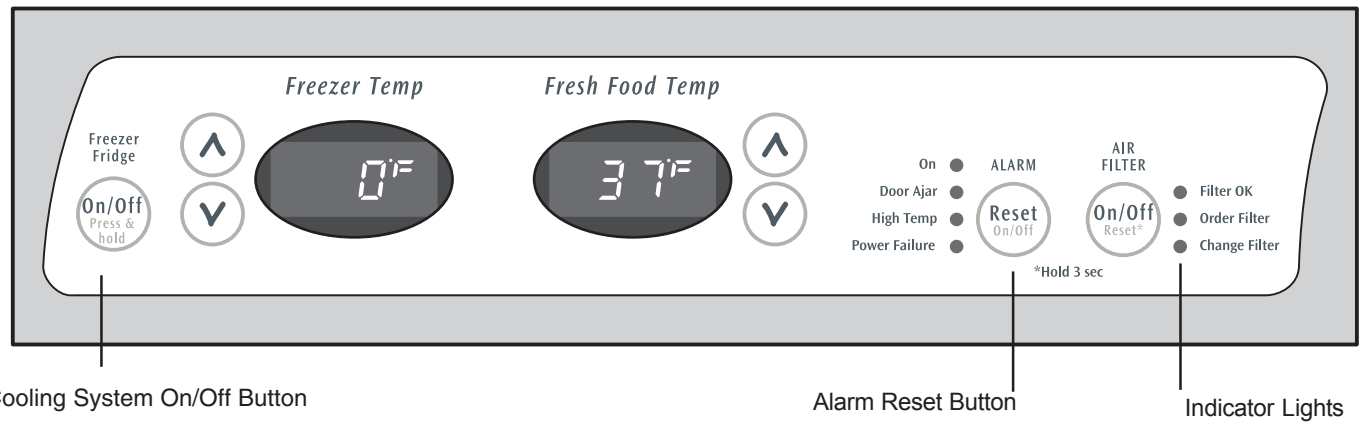

TURNING THE COOLING SYSTEM ON AND OFF

You can disable the cooling system in your refrigerator by pressing the **On/Off** button located on the left side of the temperature control panel. To ensure that you do not accidentally turn off the cooling system, the button does not work unless you press *and hold* it for three seconds. Once you disable the cooling system, all refrigeration to the freezer and fresh food compartments stops. To turn the cooling system back on, you must again press *and hold* the **On/Off** button for three more seconds.

NOTE

Pressing the **On/Off** button on the control panel disables your refrigerator's cooling system but does not disconnect power to lights and other electrical components. To turn off power to your refrigerator you must unplug the power cord from the wall outlet.

Each time you make settings on the control panel, a single audible tone acknowledges your input.

SYSTEM MONITORING ALARMS (Select Models)

The electronic control system continuously monitors your refrigerator/freezer for temperature consistency, doors left ajar, and power failures. Variances from normal operating conditions are communicated by audible tones and a set of four status indicator lights.

USING THE ALARM RESET BUTTON

You can disable or activate the alarm system by pressing *and holding* the **Reset** button for three seconds. Use it, for example, to turn off audible tones and/or flashing indicator lights.

Once you disable the alarm system, you must again press *and hold* the Alarm **Reset** button for three more seconds to reset (activate) the alarm system.

The **On** indicator light remains off while the freezer and refrigerator compartments cool toward the current cooling settings. When temperature settings are reached, the **On** light displays green to indicate an active alarm system.

RESPONDING TO ALARMS (Audible Tones & Indicator Lights)

Your refrigerator's control system can convey the following information through audible tones and the alarm indicator lights.

Alarm	Light	Tone	Condition	How To Respond
On	(light is off)		Alarm system is not active while freezer and refrigerator compartments are cooling toward the current temperature settings.	If freezer and refrigerator compartments do not match your temperature settings in three hours, expect the control system to signal other conditions. If cooling does not stabilize toward your current settings call for assistance, using the phone number on the back page of this *Use & Care Guide*.
	Steady Green		Alarm system is active.	No response required.
Door Ajar	Flashing Green	✓	Freezer or refrigerator door has been open for over five minutes.	Close door to disable and reset alarm.
High Temp	Flashing Amber	✓	Freezer or refrigerator compartment has been too warm (7.2° C or higher) for over an hour.	Press Alarm **Reset** button to turn off alarm. If temperatures do not improve, call for assistance, using the phone number on the back page of this *Use & Care Guide*.
Power Failure	Flashing Amber		A power outage was detected.	Press Alarm **Reset** button to turn off alarm and press again to reset. Check if the power failure lasted long enough to affect stored food temperatures.

AUTOMATIC ICE AND WATER DISPENSER

AUTOMATIC ICE & WATER DISPENSER OPERATING INSTRUCTIONS

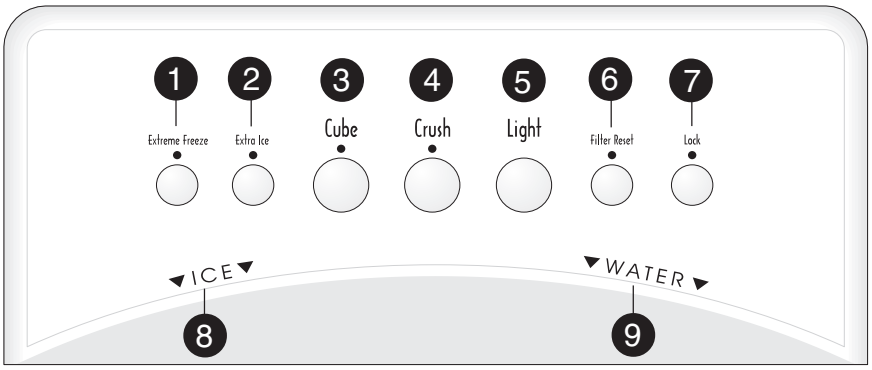

Features may vary according to model.



EXTREME FREEZE	To freeze food at a faster rate to preserve freshness, push the Touch Pad 1 for 3-5 seconds to activate this feature. A green light will appear above the Touch Pad. Push the Touch Pad 1 again for 3-5 seconds to deactivate.
EXTRA ICE	To increase ice production for special occasions, such as parties, push the Touch Pad 2 for 3-5 seconds to activate this feature. A green light will appear above the Touch Pad. Push the Touch Pad 2 again for 3-5 seconds to deactivate. Extra Ice should produce 25% to 50% more ice every 24 hours.
CUBE	Press the CUBE Touch Pad 3 to get cubed ice. A green light will appear above the Touch Pad. Press glass against ICE dispensing paddle 8 as far up as possible to catch all ice.
CRUSH	Press the CRUSH Touch Pad 4 to get crushed ice. A green light will appear above the Touch Pad. Press glass against ICE dispensing paddle 8 as far up as possible to catch all ice.
LIGHT	Press the LIGHT Touch Pad 5 to turn on dispenser light. Press 5 again to turn the light off. The light also turns on automatically when ice and/or water is dispensed. Replace light bulb with an appliance bulb of the same wattage.
FILTER STATUS	The FILTER STATUS indicator light above the Touch Pad 6 will light up each time the dispenser is used. The following filter light indications are: **Green** The filter is still operating within its specified life cycle. **Amber** The filter has reached approximately 80% of its useful life. This is the recommended time to purchase a replacement filter. **Red** The filter is 100% used up. Change the filter as soon as possible. After the filter cartridge has been changed, press and hold the FILTER RESET Touch Pad 6 for 10-15 seconds. **NOTE**: The Green, Red and Amber lights will flash when reset is completed.
LOCK	The Ice & Water Dispenser can be **locked out** to prevent unwanted use. **To Lock Out** Press the LOCK Touch Pad 7 for 3-5 seconds. A **Red** light will appear above the Touch Pad. **To Unlock** Press the LOCK Touch Pad 7 for 3-5 seconds until the **Red** light above the Touch Pad goes out.
WATER	**To operate the water dispenser,** press a glass against the WATER dispensing paddle 9. To stop dispensing water, pull the glass away from the dispensing paddle 9. **Dispensed water is not cold. For colder water, add crushed ice or cubes before dispensing water.** A drip tray located at the base of the dispenser catches small spills and allows them to evaporate. This drip tray is removable and dishwasher safe. **Do not pour water and excess ice in this area** because there is no drain.

AUTOMATIC ICE AND WATER DISPENSER

AUTOMATIC ICE & WATER DISPENSER OPERATING INSTRUCTIONS

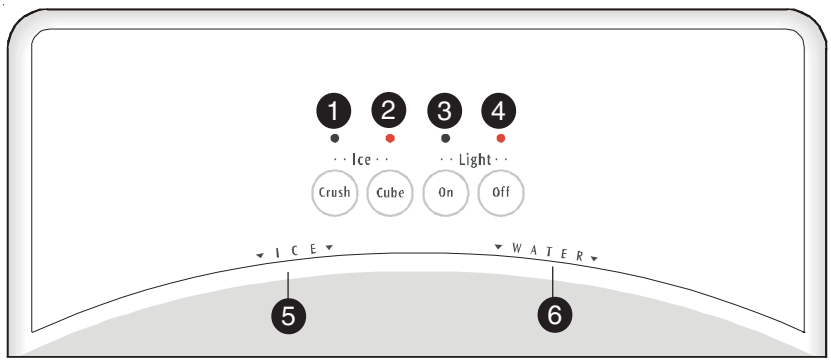

Features may vary according to model.



Crush	Press the **Crush** Touch Pad 1 to get crushed ice. A red indicator will appear above the Touch Pad. Press glass against ICE dispensing paddle 5 as far up as possible to catch all ice.
Cube	Press the **Cube** Touch Pad 2 to get cubed ice. A red indicator will appear above the Touch Pad. Press glass against ICE dispensing paddle 5 as far up as possible to catch all ice.
Light On	Press the **Light On** Touch Pad 3 to turn on dispenser light. A red indicator will appear above the Touch Pad.
Light Off	Press the **Light Off** Touch Pad 4 to turn off dispenser light. A red indicator will appear above the Touch Pad.
WATER	**To operate the water dispenser**, press a glass against the WATER dispensing paddle 6. To stop dispensing water, pull the glass away from the dispensing paddle 6. **Dispensed water is not cold. For colder water, add crushed ice or cubes before dispensing water.** A drip tray located at the base of the dispenser catches small spills and allows them to evaporate. This drip tray is removable and dishwasher safe**. Do not pour water and excess ice in this area** because there is no drain.

HOW TO PRIME THE WATER SUPPLY SYSTEM

Your refrigerator's water supply system includes several tubing lines, a water filter, a water valve and a water tank. **To ensure that your water dispenser works properly, this system must be completely filled with water when your refrigerator is first connected to the household water supply line and whenever you replace the water filter.**

CAUTION

For proper dispenser operation, recommended water supply pressure should fall between 30 psi and 100 psi. Excessive pressure may cause water filter to malfunction.

TO PRIME THE WATER SUPPLY SYSTEM:

- Begin filling the tank by pressing and holding a drinking glass against the water dispenser paddle.
- Keep the glass in this position until water comes out of the dispenser. There will be noticeable spurts and sputters as the system pushes air out through the system and dispenser nozzle. This is normal. **This may take about 1½ minutes.**
- Continue dispensing water for about 3 minutes to flush the system of any air and impurities. Empty glass as needed.

NOTE

The water dispenser has a built-in device that shuts off the water flow after 3 minutes of continuous use. To reset this shutoff device, simply release the dispenser paddle.

HOW THE ICE MAKER WORKS

CAUTION

Chemicals from a malfunctioning softener can damage the ice maker. If the ice maker is connected to soft water, ensure that the softener is maintained and working properly.

IMPORTANT

Your ice maker is shipped from the factory with the wire signal arm in the ON position (side mounted) or with the switch turned ON (rear mounted). To ensure proper function of your ice maker, hook up water supply immediately or turn ice maker OFF by lifting the wire signal arm until it clicks and locks in the UP position (side mounted) or turn the On/Off switch to the Off (0) position. **If the ice maker is not turned off and the water supply is not connected, the water valve will make a loud chattering noise.**

The ice maker and container are located in the top of the freezer compartment. After the refrigerator is installed properly and has cooled for several hours, the ice maker can begin making ice within 24 hours. Air in new plumbing lines may cause the ice maker to cycle two or three times before making a full tray of ice. With no usage, it will take approximately two days to fill the ice container.

Because of new plumbing connections, the first production of ice cubes may be discolored or have an odd flavor. Discard ice made during the first 24 hours.

TURNING YOUR *SIDE MOUNTED* ICE MAKER ON/OFF

To begin ice production, lower the wire signal arm to the DOWN or ON position. The ice maker turns off automatically when the ice container becomes full. To stop the ice maker, raise the wire signal arm until it clicks and locks in the UP or OFF position (see Figure 1).

TURNING YOUR *REAR MOUNTED* ICE MAKER ON/OFF

Ice production is controlled by the ice maker's ON/OFF power switch. To gain access to the ice maker, pull the ice cream shelf out. Press the switch to the "**O**" position to turn it Off and press it to the "**I**" position to turn it On (see Figure 2). The ice maker also has a built-in wire signal arm, which automatically stops ice production when the ice bin is full. DO NOT use this signal arm to manually stop the ice maker.

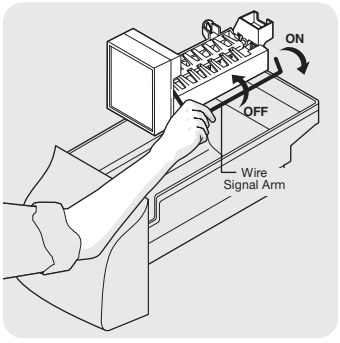

Figure 1

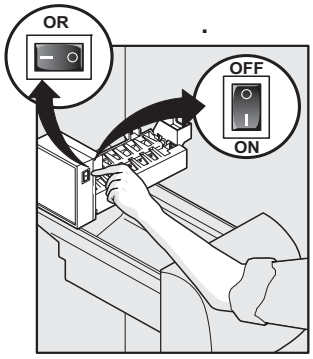

Figure 2

IMPORTANT

Small Ice cubes or ice chips jamming in the ice maker may be a sign that your water filter needs changing. If you have a side mounted ice maker you may also experience hollow cubes — partially frozen cubes with water inside. When these cubes are harvested they break open and spill water over the other ice cubes in the ice container, forming a solid mass of ice. As the water filter nears the end of its useful life and becomes clogged with particles, less water is delivered to the ice maker during each cycle. The ice maker can't fill every cube in the ice maker mold, leading to small cubes or chips that can get caught between the ice ejector blades and the stripper. **Remember, if your ice maker is jamming with small ice cubes or it's been six months or longer since you last changed your water filter – replace the water filter with a new one. Poor quality household water may require the filter to be changed more frequently.**

ICE PRODUCTION: WHAT TO EXPECT

How Much Ice Will a Side Mounted Ice Maker Produce in 24 Hours?

A side mounted ice maker will produce 4 to 4.5 pounds of ice every 24 hours, depending on usage conditions. Ice is produced at a rate of 8 cubes every 75 to 90 minutes.

How Much Ice Will a Rear Mounted Ice Maker Produce in 24 Hours?

A rear mounted ice maker will produce 3 to 4 pounds of ice every 24 hours, depending on usage conditions. Ice is produced at a rate of 8 cubes every 75 to 90 minutes.

CAUTION

If the dispensing paddle is pushed for more than four minutes, the dispenser motor may overload and stop. The overload protector will reset automatically after three or four minutes.

WARNING

Do not use the ice chute as a handle when removing or replacing the ice storage bin. Surfaces there may be sharp. Do not put fingers up ice chute. Surfaces there may be sharp.

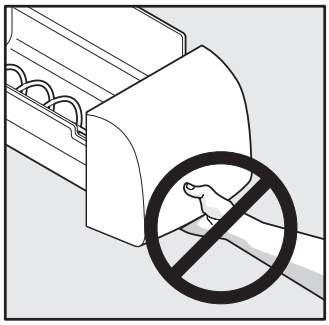

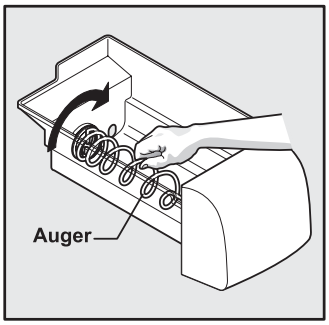

IMPORTANT

When removing or replacing the ice bin, DO NOT rotate the auger in the ice bin. If the auger is accidentally rotated, you must realign the auger by turning it in 90º turns until the ice bin fits into place with the drive mechanism. **If the auger is not** properly aligned when replacing the ice bin, the refrigerator will only dispense *Crushed Ice*. The freezer door may also not close properly causing warm air to leak into the freezer.

CAUTION

NEVER use an ice pick or similar sharp instrument to break up the ice. This could damage the ice storage bin and dispenser mechanism.

PURESOURCE ™ * ICE AND WATER FILTER (SOME MODELS)

Order new filter cartridges through the dealer where you bought the refrigerator, contact the *Electrolux Solutions Hotline* at 1-800-944-9044, or go to our web site at www.frigidaire.com. It might be good to order some filter cartridges when you first install your refrigerator. Be sure to ask for *the* RG-100 *PureSource™ replacement cartridge.**

System Startup:

Water supply does not need to be turned off, however, do not use ice and water dispenser while installing filter. The filter cartridge has already been installed in the filter housing at the factory. Refer to the *How to Prime the Water Supply System* section to properly fill the system with water.

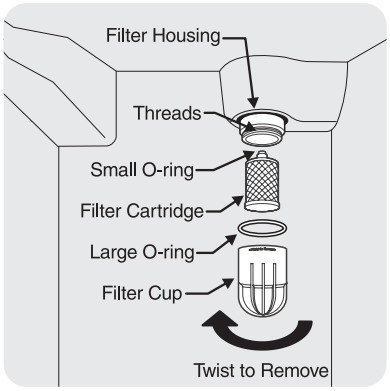

The *PureSource™ ** NGRG-2000 Ice and Water Filter System with the RG-100 cartridge is tested and certified by NSF International, the nationally recognized and respected, not for profit, certification organization for public health safety. The *PureSource™** system is tested and certified to ANSI/NSF Standard 42. See performance data sheet for specifications. This system should not be used on water that is microbiologically unsafe or with water of unknown quality unless the water has been adequately disinfected before or after traveling through the filtration system.

- Rated Capacity - 400 gallons
- Rated service flow - .5 GPM
- Maximum Rated Pressure - 100 PSI
- Maximum Operating Temp. - 100° F

Changing the Filter:

Water conditions vary throughout the world, but changing the water filter every 6 - 9 months normally will ensure the highest possible water quality. **Ice jams in the ice maker and/or hollow ice cubes (partially frozen cubes with water inside), may also be a sign that your water filter needs changing.** The Filter Status light will turn red after 400 gallons of water has flowed through the ice and water dispenser. Also, if the filter has been in a refrigerator that has not been in use for awhile (during moving for example), change the filter before reinstalling the refrigerator. The dispenser system will also operate without filtration (with filter cartridge removed).

To change filter:

It is not necessary to turn the water supply off to change the filter.

1. Open freezer door and leave open until filter change is complete.
2. Turn OFF side mounted ice maker by raising wire signal arm to the UP position. Turn OFF rear mounted ice maker by pressing ON/OFF power switch to the “O” position.
3. Hold filter cup firmly, and unscrew towards left (Some water could leak out as you remove cup. This is normal.). Filter cartridge should come down with cup. If cartridge remains in housing, pull down gently, while twisting filter back and forth.
4. Rinse out cup under running water.
5. The large o-ring that seals the filter system fits in the o-ring groove inside the cup. Should the o-ring fall out during filter cartridge replacement, simply place it back in the groove prior to screwing the cup back in place. If the o-ring becomes damaged, you will need to order one from the *Electrolux Solutions Hotline.*
6. Discard old filter cartridge.
7. Remove new filter cartridge from packaging. Place in cup. The end with the small o-ring should be up, out of the cup.
8. Screw cup, with filter, back onto housing. **Do Not Use Wrench To Reinstall Cup**. Filter cartridge will self-align as cup is tightened. Be sure cup is completely tightened with ***PureSource™*** logo facing outward. **Do Not Tighten Past Stop.**
9. Turn ON side mounted ice maker by lowering wire signal arm to the DOWN position. Turn ON rear mounted ice maker by pressing ON/OFF power switch to the “I” position.
10. Check for leaks. Open refrigerator door. Wipe any water droplets from the filter cup. Fill a glass with water. If there is a leak, unscrew filter cup, and reinsert the filter cartridge. Check placement of large O-ring. Reinstall filter cup, making certain it is tightened completely.
11. **To prime filter system and purge air from water line,** continue flushing the system for approximately 3 minutes to assure that the purest water possible is stored in the water tank. **There will be noticeable spurts and sputters as the system pushes air out through the system and out the dispenser nozzle. This is normal.**

IMPORTANT

Resetting The Filter Status Light (some models)

After replacing the filter cartridge, it will be necessary to press the *Filter Status* reset button located on the ice and water dispenser. This will reset the Filter Status light. Push the reset button until the green, red and amber lights flash (10-15 seconds). Please refer to the complete dispenser operating instructions attached to the inside of the freezer door.

On models without a *Filter Status* reset button, there is a set of Reminder Stickers included in the envelope that the Use & Care Manual came in. Choose a dated sticker that indicates 6 - 9 months (depending on your water quality and usage) from the date of installation. Place the sticker on the front of the filter cup to remind you when it is time to change the filter.

***** White Westinghouse uses the name CrystalClear instead of PureSource, but they are the same filter.

PURESOURCE2™ * ICE AND WATER FRONT FILTER (SOME MODELS)

Order new filter cartridges through the dealer where you bought the refrigerator, contact the *Electrolux Solutions Hotline* at 1-800-944-9044, or go to our web site at www.frigidaire.com. It might be good to order some filter cartridges when you first install your refrigerator. Be sure to ask for *the* FC-100 *PureSource™ replacement cartridge.**

System Startup:

Water supply does not need to be turned off, however, do not use ice and water dispenser while installing filter.

The filter cartridge has already been installed in the filter housing at the factory. Refer to the *How to Prime the Water Supply System* section to properly fill the system with water.

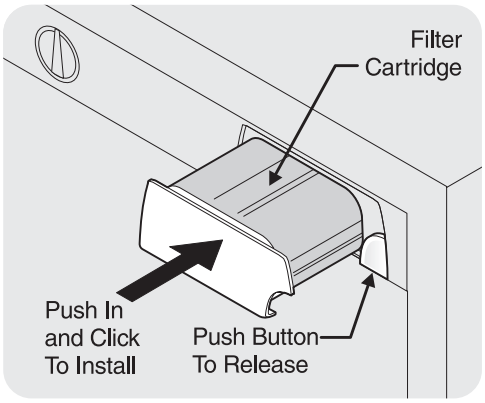

The *PureSource2™** Ice and Water Filter System NGFC 2000 with the *PureSource2™** cartridge FC 100 is tested and certified by NSF International, the nationally recognized and respected, not for profit, certification organization for public health safety. The *PureSource2™** Filter system is tested and certified to ANSI/NSF Standards 42 and 53. See performance data sheet for specifications. This system should not be used on water that is microbiologically unsafe or with water of unknown quality unless the water has been adequately disinfected before or after traveling through the filtration system.

- Rated Capacity - 400 gallons
- Rated service flow - .5 GPM
- Maximum Rated Pressure - 100 PSI
- Maximum Operating Temp. - 100° F

Changing the Filter:

Water conditions vary throughout the world, but changing the water filter every 6 - 9 months normally will ensure the highest possible water quality. **Ice jams in the ice maker and/or hollow ice cubes (partially frozen cubes with water inside), may also be a sign that your water filter needs changing.** The Filter Status light will turn red after approximately 400 gallons of water has flowed through the ice and water dispenser.

Also, if the filter has been in a refrigerator that has not been in use for awhile (during moving for example), change the filter before reinstalling the refrigerator. The dispenser system will also operate without filtration (with filter cartridge removed and bypass installed).

To change filter:

It is not necessary to turn the water supply off to change the filter.

1. Turn OFF side mounted ice maker by raising wire signal arm to the UP position. Turn OFF rear mounted ice maker by pressing ON/OFF power switch to the “O” position.
2. Push the *Filter Release Button*, located to the right of the filter cartridge, to release the filter from the housing. To minimize the possibility of the filter falling out of the housing during removal, it would be best to hold the filter as it moves out toward you.

NOTE

A small amount of water may be released during this operation. You should have a paper towel or dish cloth handy to wipe up any water that may drip out of the filter or housing. Two small holes near the back of the housing have been added for any excess water to escape. It would be best to clear away any food near this area on the top shelf in advance of removing the filter.

3. Pull the old filter cartridge straight out of the housing.
4. Discard the old filter.
5. Remove the new filter cartridge from the packaging and insert into the filter housing the same way the old one came out.
6. When the cartridge is almost in, you will feel it stop against the clip assembly in the back of the housing. The clip assembly holds the filter cartridge firmly in place. At this point, you will need to push firmly until the cartridge snaps fully in place. When completely in place, the front of the filter cartridge will be flush with the front of the housing.
7. Turn ON side mounted ice maker by lowering wire signal arm to the DOWN position. Turn ON rear mounted ice maker by pressing ON/OFF power switch to the “I” position.
8. Fill a glass with water. As you are doing this, check for leaks at the filter housing.
9. **To prime filter system and purge air from water line,** continue flushing the system for approximately 3 minutes to assure that the purest water possible is stored in the water tank. **There will be noticeable spurts and sputters as the system pushes air out through the system and out the dispenser nozzle. This is normal.**

IMPORTANT

Resetting The Filter Status Light (some models)

After replacing the filter cartridge, it will be necessary to press the *Filter Reset* button located on the ice and water dispenser. This will reset the Filter Status light. Push the reset button until the green, red and amber lights flash (10-15 seconds). Please refer to the complete dispenser operating instructions attached to the inside of the freezer door.

***** White Westinghouse uses the name CrystalClear instead of PureSource, but they are the same filter.

REPLACING THE AIR FILTER

Replacing The Air Filter

In general, you should change the air filter every six months to ensure optimal filtering of refrigerator odors. You may want to adjust this time period depending on the types and amounts of food you typically store in your refrigerator.

To replace your air filter:

1. Push the plastic bubble tab located on the side of the air filter housing. This releases the hinged bottom half to drop open.
2. Remove the old filter and discard it.
3. Unpackage the new filter and place it inside the hinged bottom half of the housing.
4. Push the hinged bottom half upward until the tab snaps into closed position.
5. Press and hold the **Filter Reset** button on the electronic control panel for 3 seconds. When the **Filter OK** light comes on, the status has been reset.
6. Press and hold the **Filter Reset** button for 3 seconds again to turn off the filter status system.

IMPORTANT

The electronic control panel, located at the top of the refrigerator compartment, includes controls to monitor the status of your air filter, including indicator lights that remind you when to order the change the filter.

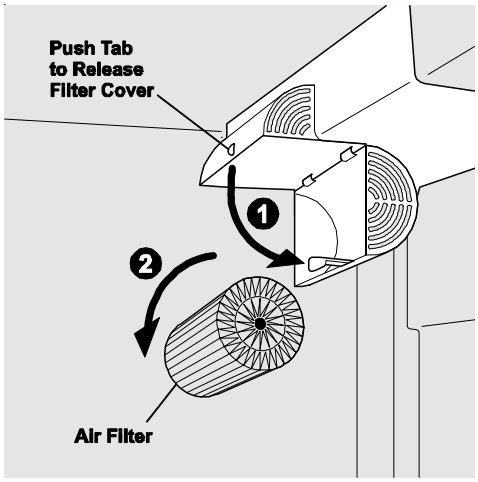

To order new air filter cartridges, contact the dealer where you bought your refrigerator, contact Electrolux Solutions Hotline at 1-800-944-9044, or go to our web site at www.frigidaire.com. It would be beneficial to order some cartridges when you first install your refrigerator. Be sure and ask for air filter replacement cartridge, part # 241504902.

NORMAL OPERATING SOUNDS & SIGHTS

UNDERSTANDING THE SOUNDS YOU MAY HEAR

Your new high-efficiency refrigerator may make unfamiliar sounds. These are all normal sounds and soon will become familiar to you. They also indicate your refrigerator is operating as designed. Hard surfaces, such as vinyl or wood floors, walls, and kitchen cabinets may make sounds more noticeable. Listed below are descriptions of some of the most common sounds you may hear, and what is causing them.

NOTE

Rigid foam insulation is very energy efficient, but is not a sound insulator.

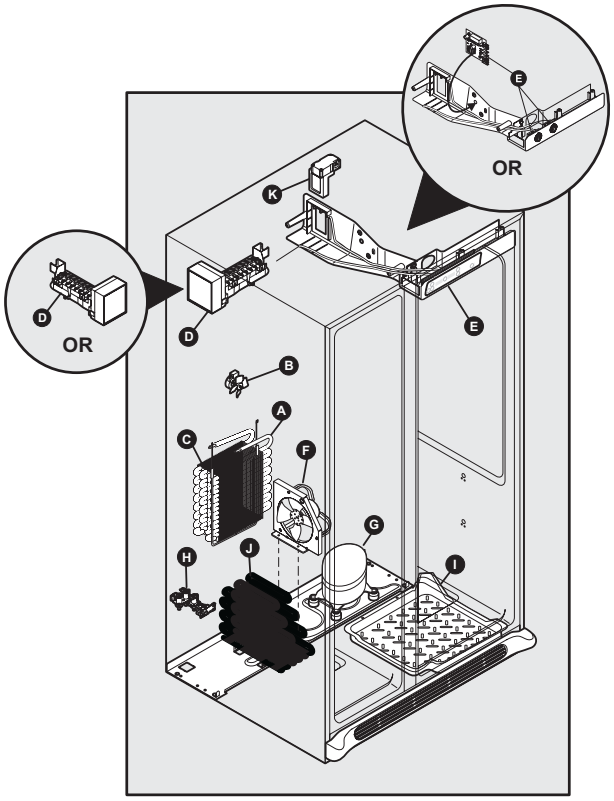

A. Evaporator

The flow of refrigerant through the evaporator may create a boiling or gurgling sound.

B. Evaporator Fan

You may hear air being forced through the refrigerator by the evaporator fan.

C. Defrost Heater

During defrost cycles, water dripping onto the defrost heater may cause a hissing or sizzling sound. After defrosting, a popping sound may occur.

IMPORTANT

During the automatic defrost cycle, you may notice a red glow in the vents on the back wall of your freezer compartment. This is normal during the defrost cycle.

D. Automatic Ice Maker

If your refrigerator is equipped with an automatic ice maker, you will hear ice cubes falling into the ice bin.

E. Cold Control & Automatic Defrost Control

These parts can produce a snapping or clicking sound when turning the refrigerator on and off.

F. Condenser Fan

You may hear air being forced through the condenser by the condenser fan.

G. Compressor

Modern, high-efficiency compressors operate much faster than older models. The compressor may have a high-pitched hum or pulsating sound.

H. Water Valve

If your refrigerator is equipped with an automatic ice maker, you will hear a buzzing sound as the water valve opens to fill the ice maker during each cycle.

IMPORTANT

Your ice maker is turned On at the factory so it can work as soon as you install your refrigerator. To ensure proper function of your ice maker, connect a water supply immediately or turn the Ice maker off by lifting the wire signal arm to the "up" or OFF position (side mounted) or the ice maker's On/Off power switch turned Off-set to the "**0**" position (rear mounted) .

I. Drain Pan (not removable)

You may hear water running into the drain pan during the defrost cycle.

J. Condenser

May create minimal sounds from forced air.

K. Motorized Damper

May produce a light humming during operation.

CHANGING THE LIGHT BULB

CAUTION

Wear gloves when replacing light bulbs to avoid getting cut.

REPLACING LIGHT BULBS

1. Unplug refrigerator.
2. Wear gloves as protection against possible broken glass.
3. Remove light cover, if necessary.
4. Unscrew and replace old bulb with an appliance bulb of the same wattage.
5. Replace light cover, if necessary.
6. Remember to plug the refrigerator back in.

CARE & CLEANING

Keep your refrigerator and freezer clean to prevent odor build-up. Wipe up any spills immediately and clean both sections at least twice a year. **Never** use metallic scouring pads, brushes, abrasive cleaners or strong alkaline solutions on any surface. **Do not** wash any removable parts in a dishwasher. ***Always unplug the power cord from the electrical outlet before cleaning.***

CAUTION

- **When moving the refrigerator, pull straight out. Do not shift the refrigerator from side to side as this may damage the floor. Be careful not to move the refrigerator beyond the plumbing connections.**
- **Damp objects stick to cold metal surfaces. Do not touch refrigerated surfaces with wet or damp hands.**
- **Never use CHLORIDE to clean stainless steel.**

NOTE

- The On/Off button on the Electronic Control only controls your refrigerator's cooling system. To turn off power to your refrigerator you must unplug the power cord from the electrical outlet.
- Do not use razor blades or other sharp instruments which can scratch the appliance surface when removing adhesive labels. Any glue left from tape or labels can be removed with a mixture of warm water and mild detergent, or, touch the glue residue with the sticky side of tape you have already removed. **Do not remove the serial plate.**

IMPORTANT

If the refrigerator is going to be stored or moved in freezing temperatures, the water in the ice and water system must be drained completely. Failure to do so could result in water leaks when the refrigerator is put back into service. Contact a service representative to perform this operation.

Care & Cleaning Chart

Part	What To Use	Tips and Precautions
Interior/Door Liner	• Soap and water • Baking soda and water	Use 2 tablespoons of baking soda in 1 quart of warm water**. Be sure to wring excess water out of sponge or cloth before cleaning around controls, light bulb or any electrical part.**
Door Gaskets	• Soap and water	Wipe gaskets with a clean soft cloth.
Drawers/Bins	• Soap and water	Do not wash any removable items (bins, drawers, etc.) in dishwasher.
Glass Shelves	• Soap and water • Glass cleaner • Mild liquid sprays	Allow glass to warm to room temperature before immersing in warm water.
Toe Grille	• Soap and water • Mild liquid sprays • Vacuum attachment	Vacuum dust from front of toe grille. Remove toe grille. Vacuum backside and wipe with sudsy cloth or sponge. Rinse and dry.
Exterior and Handles	• Soap and water • Non Abrasive Glass Cleaner	Do not use commercial household cleaners, ammonia, or alcohol to clean handles. Use a soft cloth to clean smooth handles. **Do Not use a dry cloth to clean smooth doors.**
Exterior and Handles **(Stainless Steel Models Only)**	• Soap and water • Ammonia • Stainless Steel Cleaners	**CAUTION**: **Never use CHLORIDE to clean stainless steel.** Clean stainless steel front and handles with soapy water and a dishcloth. Rinse with clean water and a soft cloth. Wipe stubborn spots with an ammonia-soaked paper towel, and rinse. Use a non-abrasive stainless steel cleaner. These cleaners can be purchased at most home improvement or major department stores. Always follow manufacturer's instructions. **NOTE: Always clean, wipe and dry with the grain to prevent cross-grain scratching.** Wash the rest of the cabinet with warm water and mild liquid detergent. Rinse well, and wipe dry with a clean soft cloth.
Exterior **(*Easy Care* Stainless Steel Models)**	• Soap and water • Mild liquid sprays	**CAUTION: DO NOT use abrasive or stainless steel cleaners on *Easy Care* Stainless Steel Models. It will remove the protective finish.** Use warm soapy water to clean Easy Care surfaces. Mild liquid sprays may be used on stubborn spots.

Major Appliance Warranty Information

Your appliance is covered by a one year limited warranty. For one year from your original date of purchase, Electrolux will pay all costs for repairing or replacing any parts of this appliance that prove to be defective in materials or workmanship when such appliance is installed, used and maintained in accordance with the provided instructions.

Exclusions

This warranty does not cover the following:

1. Products with original serial numbers that have been removed, altered or cannot be readily determined.
2. Product that has been transferred from its original owner to another party or removed outside the USA or Canada.
3. Rust on the interior or exterior of the unit.
4. Products purchased "as-is" are not covered by this warranty.
5. Food loss due to any refrigerator or freezer failures.
6. Products used in a commercial setting.
7. Service calls which do not involve malfunction or defects in materials or workmanship, or for appliances not in ordinary household use or used other than in accordance with the provided instructions.
8. Service calls to correct the installation of your appliance or to instruct you how to use your appliance.
9. Expenses for making the appliance accessible for servicing, such as removal of trim, cupboards, shelves, etc.,which are not a part of the appliance when it is shipped from the factory.
10. Service calls to repair or replace appliance light bulbs, air filters, water filters, other consumables, or knobs, handles, or other cosmetic parts.
11. Surcharges including, but not limited to, any after hour, weekend, or holiday service calls, tolls, ferry trip charges, or mileage expense for service calls to remote areas, including the state of Alaska.
12. Damages to the finish of appliance or home incurred during installation, including but not limited to floors, cabinets, walls, etc.
13. Damages caused by: services performed by unauthorized service companies; use of parts other than genuine Electrolux parts or parts obtained from persons other than authorized service companies; or external causes such as abuse, misuse, inadequate power supply, accidents, fires, or acts of God.

DISCLAIMER OF IMPLIED WARRANTIES; LIMITATION OF REMEDIES

CUSTOMER'S SOLE AND EXCLUSIVE REMEDY UNDER THIS LIMITED WARRANTY SHALL BE PRODUCT REPAIR OR REPLACEMENT AS PROVIDED HEREIN. CLAIMS BASED ON IMPLIED WARRANTIES, INCLUDING WARRANTIES OF MERCHANTABILITY OR FITNESS FOR A PARTICULAR PURPOSE, ARE LIMITED TO ONE YEAR OR THE SHORTEST PERIOD ALLOWED BY LAW, BUT NOT LESS THAN ONE YEAR. ELECTROLUX SHALL NOT BE LIABLE FOR CONSEQUENTIAL OR INCIDENTAL DAMAGES SUCH AS PROPERTY DAMAGE AND INCIDENTAL EXPENSES RESULTING FROM ANY BREACH OF THIS WRITTEN LIMITED WARRANTY OR ANY IMPLIED WARRANTY. SOME STATES AND PROVINCES DO NOT ALLOW THE EXCLUSION OR LIMITATION OF INCIDENTAL OR CONSEQUENTIAL DAMAGES, OR LIMITATIONS ON THE DURATION OF IMPLIED WARRANTIES, SO THESE LIMITATIONS OR EXCLUSIONS MAY NOT APPLY TO YOU. THIS WRITTEN WARRANTY GIVES YOU SPECIFIC LEGAL RIGHTS. YOU MAY ALSO HAVE OTHER RIGHTS THAT VARY FROM STATE TO STATE.

If You Need Service

Keep your receipt, delivery slip, or some other appropriate payment record to establish the warranty period should service be required. If service is performed, it is in your best interest to obtain and keep all receipts. Service under this warranty must be obtained by contacting Electrolux at the addresses or phone numbers below.

This warranty only applies in the USA and Canada. In the USA, your appliance is warranted by Electrolux Major Appliances North America, a division of Electrolux Home Products, Inc. In Canada, your appliance is warranted by Electrolux Canada Corp. Electrolux authorizes no person to change or add to any obligations under this warranty. Obligations for service and parts under this warranty must be performed by Electrolux or an authorized service company. Product features or specifications as described or illustrated are subject to change without notice.

USA
1.800.944.9044
Electrolux Major Appliances
North America
P.O. Box 212378
Augusta, GA 30907

Electrolux

Canada
1.800.668.4606
Electrolux Canada Corp.
5855 Terry Fox Way
Mississauga, Ontario, Canada
L5V 3E4

BEFORE YOU CALL

1-800-944-9044 (United States)
1-800-668-4606 (Canada)

Visit our web site at **www.frigidaire.com.**

PROBLEM	CAUSE	CORRECTION
RUNNING OF REFRIGERATOR		
Compressor does not run.	• Freezer control is set to "OF" or “0”. • Refrigerator is in defrost cycle. • Plug at electrical outlet is disconnected. • House fuse blown or tripped circuit breaker. • Power outage.	• Set freezer control. See **Temperature Controls** section. • This is normal for a fully automatic defrost refrigerator. The defrost cycle occurs periodically, lasting about 30 minutes. • Ensure plug is tightly pushed into outlet. • Check/replace fuse with a 15 amp time-delay fuse. Reset circuit breaker. • Check house lights. Call local Electric Company.
Refrigerator runs too much or too long.	• Room or outside weather is hot. • Refrigerator has recently been disconnected for a period of time. • Automatic ice maker is operating. • Doors are opened too frequently or too long. • Fresh Food/freezer door may be slightly open. • Freezer control is set too cold (control found in Fresh Food section). • Fresh Food/freezer gasket is dirty, worn, cracked, or poorly fitted. • Condenser is dirty.	• It’s normal for the refrigerator to work longer under these conditions. • It takes 8-12 hours for the refrigerator to cool down completely. • Ice maker operation causes refrigerator to run slightly more. • Warm air entering the refrigerator causes it to run more. Open doors less often. • Ensure refrigerator is level. Keep food and containers from blocking door. See **PROBLEM** section **OPENING/CLOSING OF DOORS/DRAWERS**. • Set Fresh Food control to warmer setting until refrigerator temperature is satisfactory. Allow 24 hours for temperature to stabilize. • Clean or change gasket. Leaks in door seal will cause refrigerator to run longer in order to maintain desired temperatures. • Clean condenser. See *Care & Cleaning Chart* in **Care and Cleaning** section.
Compressor goes off and on frequently.	• Thermostat keeps the refrigerator at a constant temperature.	• This is normal. Refrigerator goes on and off to keep temperature constant.
TEMPERATURES ARE TOO COLD		
Freezer temperature too cold. Fresh Food temperature is satisfactory.	• Freezer control is set too cold.	• Set freezer control to a warmer setting. Allow 24 hours for temperature to stabilize.
Fresh Food temperature too cold. Freezer temperature is satisfactory.	• Fresh Food control is set too cold.	• Set fresh food control to a warmer setting. Allow 24 hours for temperature to stabilize.
Food stored in drawers freezes.	• Fresh Food control is set too cold.	• See solution above.
Food stored in Meat Keeper freezes (some models).	• Meat Keeper Temperature Control set too cold.	• Adjust Meat Keeper Temperature Control to a lower setting. (Meat should be stored at a temperature just below the freezing point for maximum fresh storage time. It is normal for ice crystals to form due to the moisture content of meat.)
Digital temperature displays are flashing.	• Electronic control system has detected a performance problem.	• Call your Electrolux service representative, who can interpret any messages or number codes flashing on the digital displays.

PROBLEM	CAUSE	CORRECTION
TEMPERATURES ARE TOO WARM		
Freezer/Fresh Food temperature is too warm.	• Doors are opened too frequently or too long. • Door is slightly open. • Condenser is dirty.	• Warm air enters the refrigerator whenever the door is opened. Open the door less often. • See **PROBLEM** section **OPENING/CLOSING OF DOORS/DRAWERS**. • Clean condenser. See *Care & Cleaning Chart* in **Care and Cleaning** section.
Freezer temperature is too warm. Fresh Food temperature is satisfactory.	• Freezer control is set too warm.	• Set freezer control to a colder setting. Allow 24 hours for temperature to stabilize.
Fresh Food temperature is too warm. Freezer temperature is satisfactory.	• Fresh Food control is set too warm.	• Set fresh food control to a colder setting. Allow 24 hours for temperature to stabilize.
Temperature in the Meat Keeper is too warm (some models).	• Meat Keeper Temperature Control is set too warm.	• Adjust Meat Keeper Temperature Control to a colder setting.
WATER/MOISTURE/FROST INSIDE REFRIGERATOR		
Moisture collects on inside of refrigerator walls.	• Weather is hot and humid. • Door is slightly open. • Door is opened too often or too long. • Open containers.	• The rate of frost buildup and internal sweating increases. • See **PROBLEM** section **OPENING/CLOSING OF DOORS/DRAWERS**. • Open door less often. • Keep containers covered.
Water collects on bottom side of drawer cover.	• Vegetables contain and give off moisture.	• It is not unusual to have moisture on the bottom side of the cover. • Move humidity control (some models) to lower setting.
Water collects in bottom of drawer.	• Washed vegetables and fruit drain while in the drawer.	• Dry items before putting them in the drawer. Water collecting in bottom of drawer is normal.
WATER/MOISTURE/FROST OUTSIDE REFRIGERATOR		
Moisture collects on outside of refrigerator or between doors.	• Weather is humid. • Door is slightly open, causing cold air from inside refrigerator to meet warm air from outside.	• This is normal in humid weather. When humidity is lower, the moisture should disappear. • See **PROBLEM** section **OPENING/CLOSING OF DOORS/DRAWERS**.
AUTOMATIC ICE MAKER		
Ice maker is not making any ice.	• Ice maker wire signal arm is in the “up” or **OFF** position. • Ice maker power switch is Off. • Household water line valve is not open. • Ice maker has small cube caught in mechanism. • Freezer is not cold enough. • Saddle valve on cold water pipe is clogged or restricted by foreign material.	• Move wire signal arm to the “down” or **ON** position. (side mounted) • Turn power switch to On (“**I**”) position. (rear mounted) • Turn on household water line valve. • Remove small cube from ice maker. The ice & water filter cartridge may be clogged. Replace filter cartridge. • See **PROBLEM** section **TEMPERATURES ARE TOO WARM**. • Turn off household water line valve. Remove valve. Ensure that valve is not a self-piercing saddle valve. Clean valve. Replace valve if necessary.

PROBLEM	CAUSE	CORRECTION
AUTOMATIC ICE MAKER (CONTINUED)		
Ice maker is not making enough ice.	• Ice maker is producing less ice than you expect. • Freezer is not cold enough. • Household water line valve is not completely open. • Check to see if water dispenser is dispensing slower than normal.	• Side mounted ice maker should produce 4 to 4.5 pounds (approximately 4 quarts) of ice every 24 hours. A rear mounted ice maker should produce 3 to 4 pounds (approximately 3½ quarts) of ice every 24 hours. ***Extra Ice*** option should produce 25% to 50% more ice every 24 hours. • See **PROBLEM** section **TEMPERATURES ARE TOO WARM.** • Turn on household water line valve. • If it is, replace the ice & water filter cartridge.
Ice maker will not stop making ice.	• Ice maker wire signal arm is being held down by some item in the freezer.	• Move item and release wire signal arm. Remove any ice cubes that are frozen together over the wire signal arm.
Ice cubes are freezing together.	• Ice cubes are not being used frequently enough. • Ice cubes are hollow (partially frozen cubes with water inside). • Freezer control is set too warm. • Very little food in freezer.	• Remove ice container and discard ice from container. Ice maker will produce fresh supply. • The ice & water filter cartridge may be clogged. Replace filter cartridge. • Set freezer control to colder setting. Allow 24 hours for temperature to stabilize. • Add more food to freezer.
Ice has bad odor and taste.	• Ice has picked up odor or flavor from strong food stored in refrigerator or freezer. • Water running to ice maker has poor taste or odor. • Ice not used frequently enough.	• Cover foods tightly. Discard stale ice. Ice maker will produce fresh supply. • Add filter to water supply line. Consult a water purifying company. • Discard stale ice.
ICE DISPENSER		
Dispenser will not dispense ice.	• Ice storage container is empty. • Freezer temperature is set too warm. • Household water line valve is not open. • Freezer door is not closed. • Ice dispensing arm has been held in for more than 4-5 minutes.	• When the first supply of ice is dropped into the container, the dispenser should operate. • Turn freezer control to a higher setting so that ice cubes will be made. When first supply of ice is made, dispenser should operate. • Open household water line valve. Allow sufficient time for the ice to be made. When ice is made, the dispenser should operate. • Ensure freezer door is closed. • Motor is overloaded. Motor overload protector will reset in approximately 3 minutes. Ice can then be dispensed.
Ice dispenser is jammed.	• Ice has melted and frozen around auger due to infrequent use, temperature fluctuations, and/or power outages. • Ice cubes are jammed between ice maker and back of ice container. • Ice cubes are frozen together. • Ice cubes are hollow (partially frozen cubes with water inside).	• Remove ice container, thaw, and empty the contents. Clean container, wipe dry, and replace in proper position. When new ice is made, dispenser should operate. • Remove ice cubes that are jamming the dispenser. • Use the dispenser often so that cubes do not freeze together. • The ice & water filter cartridge could be clogged. Replace the filter cartridge. Dispensing system operates best at 30 – 100 psi water pressure. Well water pressures should fall within this range.

PROBLEM	CAUSE	CORRECTION
WATER DISPENSER		
Dispenser will not dispense water.	• Household water line valve is not open. • Freezer door is not closed. • Ice & water filter cartridge is clogged. • Front filter not fully installed, if equipped	• Open household water line valve. See **PROBLEM** section **ICE MAKER IS NOT MAKING ANY ICE**. • Ensure that freezer door is closed. • Replace filter cartridge. • Push filter in until you hear a “click”. Filter should be flush with cabinet.
Water has an odd taste and/or odor.	• Water has been in the tank for a period of time. • Unit not properly connected to cold water line. • Tubing used in the household water supply and installation may affect water taste and odor. • Water has a high mineral content.	• Draw and discard 10 – 12 glasses of water to freshen the supply and completely rinse out the tank. • Connect unit to cold water line that supplies water to the kitchen faucet. • For best results, use copper tubing for water connections. • Contact water treatment plant for help.
Water pressure is extremely low.	• Cut-off and cut-on pressures are too low (well systems only). • Reverse osmosis system is in regenerative phase.	• Have someone turn up the cut-off and cut-on pressure on the water pump system (well systems only). • It is normal for a reverse osmosis system to be below 20 psi during the regenerative phase.
ODORS IN REFRIGERATOR		
Interior is dirty.	• Interior needs to be cleaned. • Food with strong odors is in refrigerator.	• See *Care & Cleaning Chart* in **Care and Cleaning** section. • Cover food tightly.
OPENING/CLOSING OF DOORS/DRAWERS		
Door(s) will not close.	• Door was closed too hard, causing other door to open slightly. • Refrigerator is not level. It rocks on the floor when moved slightly. • Refrigerator is touching a wall or cabinet.	• Close both doors gently. • Ensure floor is level and solid, and can adequately support the refrigerator. Contact a carpenter to correct a sagging or sloping floor. • Ensure floor is level and solid, and can adequately support the refrigerator. Contact a carpenter to correct a sagging or sloping floor.
Drawers are difficult to move.	• Food is touching shelf on top of drawer. • Track that drawers slide on is dirty.	• Keep less food in drawer. • Clean drawer, rollers, and track. See *Care & Cleaning Chart* in **Care and Cleaning** section.
LIGHT BULB IS NOT ON		
Light bulb is not on.	• Light bulb is burned out. • Light switch is stuck. • No electric current is reaching refrigerator.	• See *Replacing Light Bulbs* in **Care and Cleaning** section. • Light switch is located on side of refrigerator and freezer liners. • See **PROBLEM** section **RUNNING OF REFRIGERATOR.**
IF YOU HEAR (electronic models only)		
5 beeps	• A door has been left open for 5 minutes or more.	• These beeps will repeat once every minute until the door has been closed. This is normal for the “Door Ajar” alarm.
3 beeps	• The refrigerator has experienced a loss of power or a low voltage condition.	• This is normal when “Power-On-Reset” is activated.

Features may vary according to model

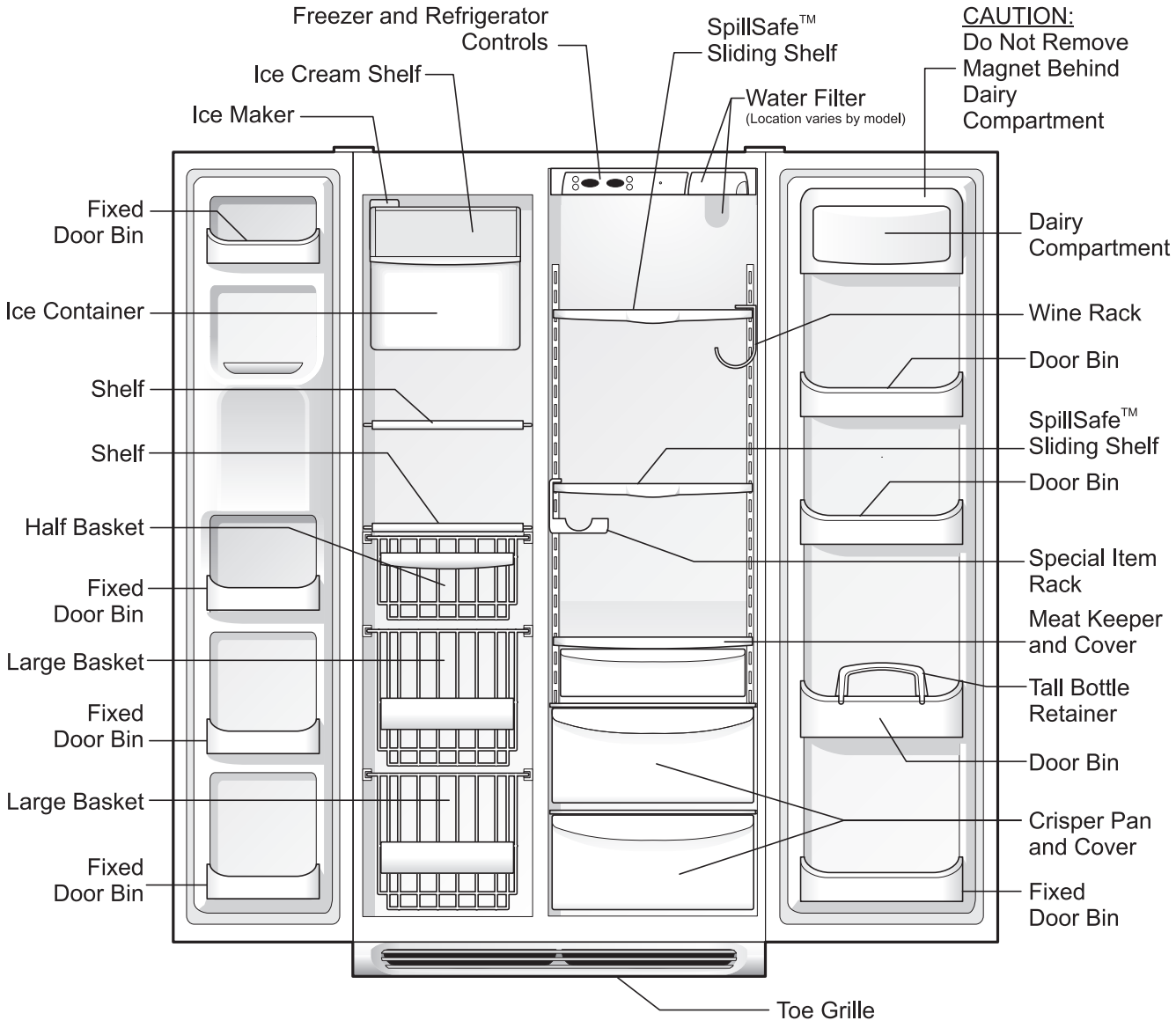

Mechanical Controls