La Premiere

Mode d'emploi
User Manual
Gebrauchsanweisung
Modo de empleo
Gebruiksaanwijzing
Istruzioni per l'uso
用户手册
用戶手冊



EUROCAVE

NOTES

WELCOME

GB

You have just purchased a EuroCave product – thank you for your custom.
We take particular care in manufacturing our products in terms of their design, ergonomics and ease of use.
We hope that you will be completely satisfied with this product.

WARNINGS

The information contained in this document may be changed without warning.
EuroCave offers no guarantee for this appliance when it is used for purposes other than those for which it was designed. EuroCave shall not be held responsible for any errors contained in this manual or for any damage linked to or resulting from the supply, performance or use of this appliance.
This document contains original information, which is protected by copyright. All rights are reserved. Photocopying, reproducing or translating this document, whether partially or completely, is strictly forbidden, without EuroCave's prior written consent.
It is not designed to be used by people (including children) with reduced mental, sensorial or physical abilities, or by people who have no experience or knowledge, unless they have first received instructions on how to use the machine or are supervised by a person responsible for their safety.
Children must be supervised to ensure that they do not play with the appliance.
If the power lead is damaged, it must be replaced by a special cable or unit available from the manufacturer or its customer service department.
WARNING:
– Ensure that the air vents in the appliance's cavity and the flush-fitting structure are unobstructed.
– Necessity to have the plug accessible after installation
– Do not use mechanical devices or other means to speed up the defrosting process other than those recommended by the manufacturer.
– Do not damage the refrigeration circuit.
– Do not use electrical appliances inside the wine storage compartment, unless they have been recommended by the manufacturer.
– This appliance is only designed for storing wine.
– This appliance is not designed to be used as a built-in appliance.
– Do not store in this appliance explosive substances such as aerosols containing flammable propellant gas.
This appliance is intended for domestic and similar applications such as:
– kitchenettes reserved for staff of shops, offices and other professional environments;
– gites and use by guests of hotels, motels and other environments which are residential in nature
– hotel rooms;
– the food service industry and other similar applications except for retail sale.
There is a name plate inside the cabinet. The name plate provides various technical information and safety notice with a yellow flame triangle label, name and chemical symbol of the refrigerant.
The refrigerator contains flammable refrigerant (R600a: iso-butane). Requirements to ensure gas safety and safe use of refrigerators: The refrigerator system behind and inside the refrigerator contains refrigerant. Do not allow any sharp objects must come into contact with the refrigeration system.
Children should be supervised to ensure that the refrigerator should be used properly.
Do not use the mechanical devices or other means to accelerate the defrosting process, unless they are of the type recommended by the manufacturer.
Do not block the openings on the circumstances of the refrigerator.
– In case of having damaged the refrigerant circuit, do not use electic items or fire equipments nearby, and open all the windows to provide good ventilation. Please also contact your local maintenance agent to follow up
– Do not remove the bottom grill of the cabinet unless it is recommended by the manufacturer. Do not place directly the wine bottles without the grill.
– The use of an extension cord is not recommended.
– DANGER: Risk of child entrapment. Before you throw away your old wine cabinet:
  – Take off the doors
  – Leave the shelves in place so that children may not easily climb inside.

The warning labels mentioned above should be kept throughout the life of the refrigerator. The user manual should be handed over to any person who would use or handle the refrigerator whenever the refrigerator would be transferred to another location and delivered to a recycling plant.

WELCOME TO THE WORLD OF EUROCAVE

Our priority is helping you to find the best solutions for your wine storage needs…To do so, EuroCave has drawn on its considerable expertise to combine the 6 essential criteria for serving wine:

Temperature
The two enemies of wine are extreme temperatures and sudden fluctuations in temperature. A constant temperature allows wine to reach its full potential.

Humidity
It is an important factor, allowing the corks to retain their sealing qualities. The level of humidity must be above 50% (ideally between 60 and 75%).

Protection from light
Light, particularly its ultraviolet component, causes wine to deteriorate very quickly by irreversible oxidation of tannins. It is therefore strongly recommended that you store your wine in a place protected from U.V. light.

Lack of vibration
Vibration disturbs wine's long development process and is often fatal for your finest wines. The "Main Du Sommelier" supports adapt to the shape of the bottle and protect it from vibration (anti-vibration technology).

Circulation of air
A constant supply of fresh air prevents mould from developing in your cabinet. EuroCave cabinets benefit from a ventilation system by breather effect, which makes it very similar to the ventilation system found in a natural cellar.

Storage
Moving bottles around too often is harmful to your wine. Having suitable shelving which limits handling is essential.

Thank you for placing your trust in EuroCave.

Standard temperatures for serving wine

French wines	
Alsace	10 °C
Beaujolais	13 °C
Sweet White Bordeaux	6 °C
Dry White Bordeaux	8 °C
Bordeaux Reds	17 °C
Burgundy Whites	11 °C
Burgundy Reds	18 °C
Champagne	6 °C
Jura	10 °C
Languedoc-Roussillon	13 °C
Provence Rosé	12 °C
Savoie	9 °C
Dry White Loire Wines	10 °C
Sweet White Loire Wines	7 °C
Loire Reds	14 °C
Rhône wines	15 °C
Sweet Wines from the South-West	7 °C
Reds from the South-West	15 °C

Australian wines	
Cabernet franc	16 °C
Cabernet sauvignon	17 °C
Chardonnay	10 °C
Merlot	17 °C
Muscat à petit grain	6 °C
Pinot noir	15 °C
Sauvignon blanc	8 °C
Semillon	8 °C
Shiraz	18 °C
Verdhelo	7 °C

Other wines	
California	16 °C
Chile	15 °C
Spain	17 °C
Italy	16 °C

CONTENTS

1 - Description of your wine cabinet **22**

2 - Power supply **23**

3 - Protecting the environment / Eco-design **23**

4 - Installing your wine cabinet **23-24**

5 - Layout – Storage **25-26**

6 - Commissioning your wine cabinet **27**
I Connection and powring up 27
II-A Description (1 temperature models V-LAPREMIERE-S, V-LAPREMIERE-M, V-LAPREMIERE-L) 27
II-B Temperature setting 27
III-A Description (multi temperatures model S-LAPREMIERE-L) 28
III-B Temperature setting 28
IV- Relative humidity level display 29
V- Setting the lighting mode 29
VI- Charcoal filter meter display 29

7 - Everyday maintenance **30**

8 - Operating faults **31**

9 - Energy and technical features **31-32**

10 - Storage simulation **130-131**

11- Wiring diagram **132**

1/ DESCRIPTION OF YOUR WINE CABINET

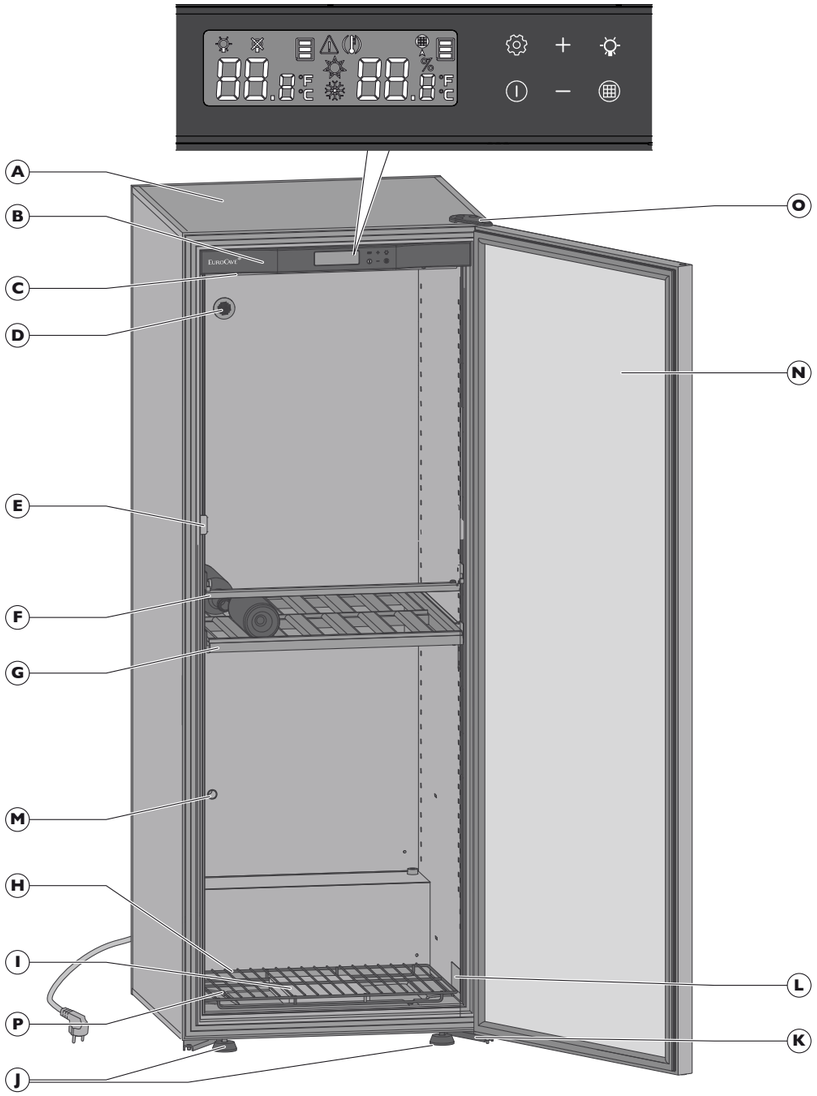

A Cabinet body
B Setting and control panel
C Lighting (2 LEDs)
D Breather hole + Active charcoal filter
E Door catch
F Cabinet body stiffener, large model only - do not remove
G Multi purpose shelf
H Grill
I Humidity cartridge - 1-temperature model only
J 2 adjustable feet for levelling
K Lower hinge (x2)
L Product identification label
M Fresh air vent
N Door (fitted with a dual-action lock)
O Upper hinge
P Condensate collection tray with outlet hole

2/ POWER SUPPLY

For your personal safety, the wine cabinet must be correctly earthed. Ensure that the socket is correctly earthed and that your installation is protected by a circuit breaker (30mA*)
* Not applicable to some countries.

The wine cabinet's power lead has a plug, to be plugged into a standard earthed outlet to prevent any risk of electric shock.

Have the power supply socket checked by a qualified electrician who will check that it is correctly earthed and will carry out, if necessary, work to ensure that the socket complies with current standards.

Contact your usual EuroCave retailer to change the power lead if it is damaged. It must be replaced by a EuroCave original manufacturer's part.

If you are moving to a foreign country, check that the supply characteristics of the cabinet correspond to the country (voltage, frequency).

3/ PROTECTING THE ENVIRONMENT / ECO-DESIGN

Spare parts for our appliances are available for 11 years. For further information, contact your EuroCave stockist. For France, contact our customer service department. Contact details at www.eurocave.com

Disposal of packaging

All packaging used by EuroCave is made from recyclable materials.
After unpacking your cabinet, take the packaging to a refuse collection point. For the most part, it will be recycled.

Recycling: a caring gesture

Electrical and electronic equipment can have a harmful effect on the environment and human health owing to the presence of hazardous substances.
You should never therefore trash electronic and electrical equipment with unsorted municipal waste.
When purchasing a new EuroCave product, you can entrust recycling of your old appliance to your EuroCave retailer.
Speak to your EuroCave retailer. He will explain the removal and collection arrangements set up in the EuroCave network.
In compliance with legislation relating to protecting and caring for the environment, your wine cabinet does not contain C.F.C.s or H.C.F.Cs.

To save energy

- Install your wine cabinet in a suitable location (see following page) and observe the recommended temperature ranges.
- Keep the door open for as short a time as possible.
- Ensure that the door seal is in good working order and that it is not damaged. If it is, contact your EuroCave retailer
- We recommend that you fill your wine cabinet to at least 75% of its total capacity.

Disable any unusable appliances by unplugging them and cutting off the power lead.

4/ INSTALLING YOUR WINE CABINET

- When your cabinet is delivered, check the outside for signs of damage (impact, warping…).
- Open the door and check that the various elements inside are intact (walls, Main du Sommelier supports, hinges, bottle support…).
- Remove the protective elements found inside and outside your cabinet including the lower hinge protector (see diagram (1))
- Fit the cap (see diagram 2), found in the accessories bag, used for sealing the hole in the lower hinge.

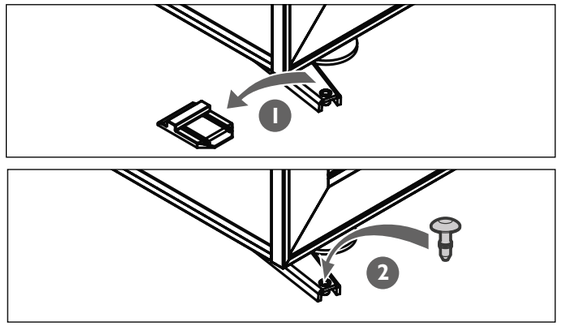

- Protective wedges for transportation have been attached to each shelf. 2 wedges per shelf (Picture 1). Remove all of them using a rotating movement (Picture 2). You can retain these wedges and reuse them if you have to transport your wine cabinet over a long distance.

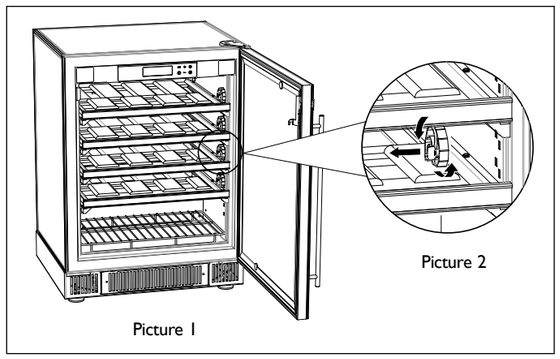
Picture 2

Picture 1

Precautions

- Do not place your cabinet in an area liable to flood.
- Do not place your cabinet close to a source of heat or expose it to direct sunlight
- Prevent water from splashing on any parts of the rear of the machine.
- Arrange the power lead so that it is accessible and does not come into contact with any of the appliance's components.
- Tilt the cabinet slightly backwards in order to adjust the front feet (by screwing or unscrewing them) so that you can level your cabinet (spirit level recommended).

Precautions (Continued)

- For single-temperature models only:

- If you notice low humidity levels (<55%) a few days after setting your wine cabinet into operation, we recommend that you use the humidity cartridge, supplied in a bag with the appliance. Place it at the bottom of the cabinet, under the rack in the drip tray provided (see diagram below). When using for the first time, completely immerse your cartridge in tap water for a few minutes to saturate it then allow it to dry. Depending on external conditions, it may be necessary to add a 10cl glass of water after several months.

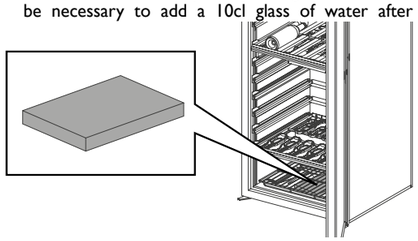

- If the appliance is not able to reduce humidity levels to the desire value, remove the black discharge pipe located at the base of the cabinet.

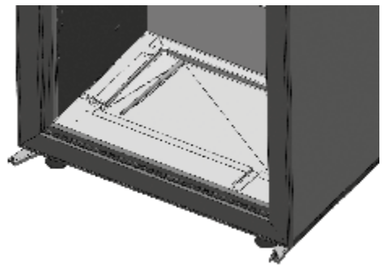

If you leave your wine cabinet closed for long periods (>3 months) in an environment where the temperature is close to your cabinet's temperature setting (a difference of about <5°C) this could create an environment in which mould develops or cause your bottles's labels to peel off. Lack of dehumidification and air renewal can create significant humidity inside the cabinet. We strongly recommend that you regularly monitor your cabinet and clean it once a year.

- Install the stop (which is located in the accessories bag) at the back of the cabinet (see diagram).
- This allows a space of 7cm to be maintained between the wall and the rear of the cabinet. This space allows your cabinet's power consumption to be optimised.
- Place the 2 caps in the 2 holes at the top of the cabinet.
- Do not push the caps all the way in, in order to allow the rear stop to be installed.
- Slide the rear stop between the caps and the wall of the cabinet, then push the 2 caps all the way in.

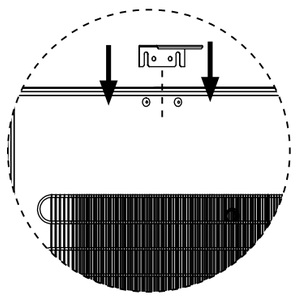

Installation

Place your cabinet in the desired location.

It must:

- be open to the outside and well ventilated (not in an enclosed cupboard, for example),
- not be too damp. Max 85% ambient humidity (linen cupboard, laundry room, bathroom...),
- have a flat, stable floor,
- be supplied with power (standard outlet, 16A, earthed with 30mA* circuit breaker). (* not applicable to some countries).

When moving your cabinet, never tilt it more than 45°, and always on its side (on the opposite side of the flexible lead).

- Place your cabinet in the desired location.
- Fit the charcoal filter (located in the "accessories" bag) by inserting it into the breather hole located on the top left-hand side of the inside of your cabinet.

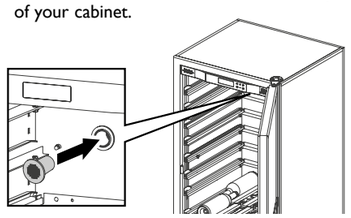

- Wait 48hrs before plugging in your cabinet
- When using your cabinet for the first time, the charcoal filter alarm will display. Reset the filter meter to 365 (see chapter 6, § VII).

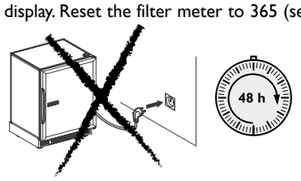

Installation of two cabinets side by side

Caution: In the case of two side by side cabinets installed in extreme conditions (Temperature >30°C - Relative Humidity > 70%), in order to prevent condensation of stagnant air between the walls, please leave either a minimum space of 5 cm between the two cabinets, or fill the space with a foam sheet to remove the void.

Door security

In order to make your cabinet secure, all doors have a lock. You will find the key for this type of lock (figure 2) in your accessories bag.

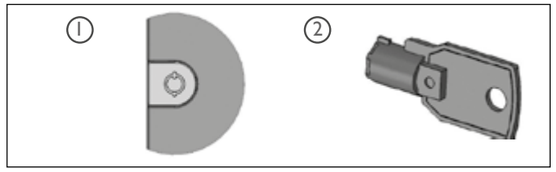

Bottles must be arranged so that they do not come into contact with the back wall. If this happens, the condensation created on the wall may trickle onto the shelves and damage the bottle labels. In addition, contact with the cold wall may create a frost point, which is harmful to your wine.

I. Door reversibility

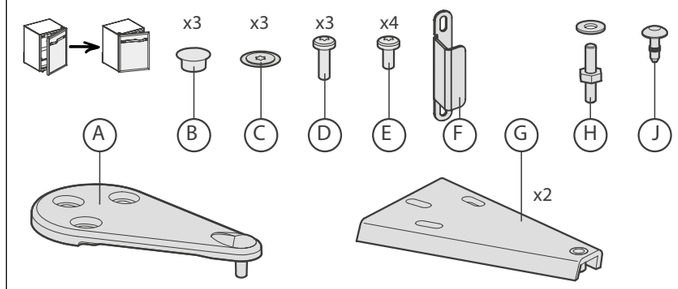

A Upper hinge
B Caps
C Caps
D Torx screw
E Hex screw
F Door catch
G Lower hinge
H Door pin
J Door pin cap

This allows you to change the direction in which the door opens. Follow the instructions below (example for changing a right-hand door into a left-hand door):

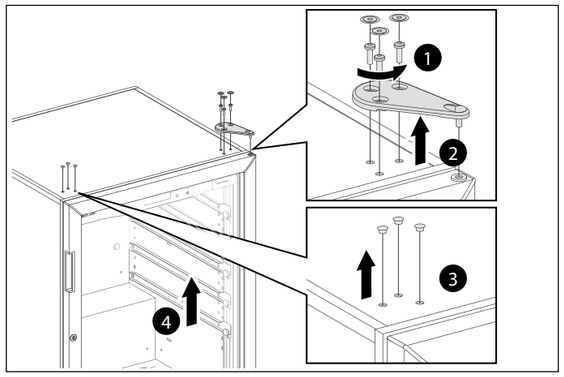

1 Carefully remove the caps using a thin blade.
2 Unscrew the three screws using a "T25" Torx wrench.
3 Remove the upper hinge.
4 Remove the cabinet door by opening it slightly, then lifting it upwards.

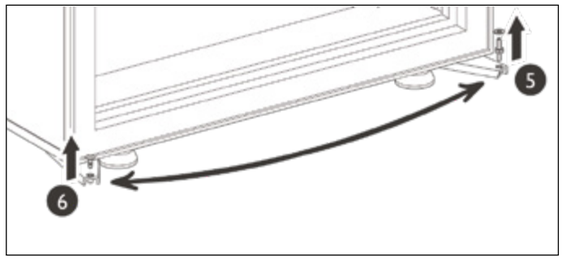

5 Unscrew the door pin.
6 Carefully remove the cap using a thin blade and assemble the pin in its place. Reposition the cap on the opposite side

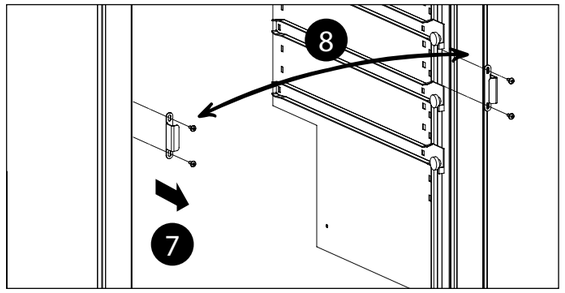

7 Unscrew the two screws and the door catch.
Unscrew the two screws on the opposite side and remove the two washers.
8 Mount the door catch on the desired opening side, using screws.
Replace the washers, then the screws, on the side opposite the door catch.

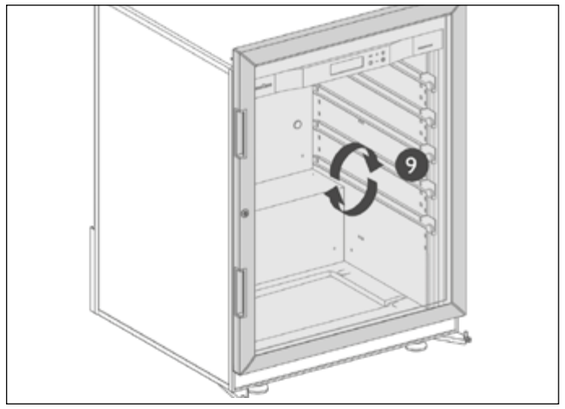

9 Turn the door through 180°.

Warning: the door is very heavy. Take any necessary precautions to ensure that you do not injure yourself or drop it.

Warning: the glass door with a handle and the plain door with a handle are not reversible. The handle's off-centre position does not allow it.

4/ INSTALLING YOUR WINE CABINET

10 Put the door back on its pin.

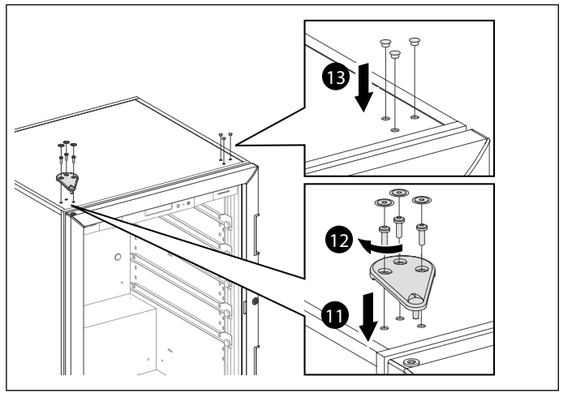

11 Put in place the upper hinge.

12 Screw the hinge so that the door is completely parallel to the cabinet. Check that the door seal adheres well to the cabinet (by closing the door), to ensure that it is completely air-tight.

13 Put in place the caps.

5/ LAYOUT – STORAGE

Your EuroCave cabinet was designed to be adaptable. Its storage equipment adapts to your requirements and can be added to over time.

Different types of storage

Shelf as standard



Universal storage shelf Ref. AEPHU1

Capacity : 72 bouteilles
Max weight : 100 kg

Shelf as option



Articulated presentation kit for ACMS shelves Ref.: AOPRESAR

Capacity: 32 bottles



Universal sliding shelf fitted with "Main du sommelier" supports Ref.: ACMS

Capacity: 12 bottles

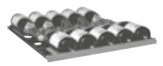

Champagne sliding shelf Ref. : ACHH

Capacity: 10 bottles



Serving sliding shelf Ref.: ACVH

Capacity: 20 bottles



Display shelf Ref.: ACPH

Capacity: 22 bottles

We strongly recommend that you do not leave your wine bottles:
- Wrapped in tissue paper inside your EuroCave wine cabinet. Tissue paper does not tolerate ambient humidity in the long-term. The saturated paper will stick to your bottle labels and damage them.
- Stored in cardboard packaging or a wooden case in your EuroCave wine cabinet, in order to encourage maximum air flow around the bottles and prevent the packaging from deteriorating, which could eventually contaminate your wine bottles.

5/ LAYOUT – STORAGE

Loading and layout advice

The multi-purpose shelf (Ref. AEPHU1) can be used as a storage shelf, sliding shelf or display shelf. The shelves in your cabinet have 12 recesses, allowing your bottles to be stored safely.

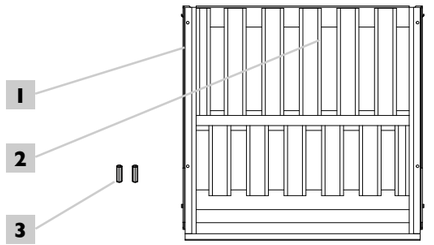

30 dowel pins supplied in the accessories bag.

1 Runners (x2)
2 Shelf - 12 recesses
3 Dowels (x2)

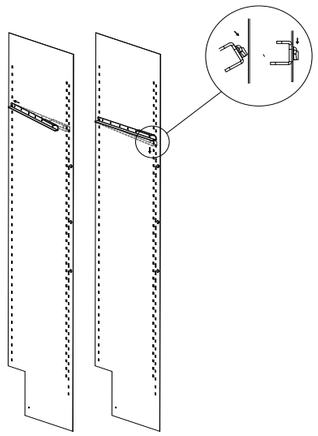

Diagram 1

Installing a shelf in storage version

To install bottles on a storage shelf, proceed as follows:

1. Insert 2 runners in the shelf support strips. For each shelf, position one runner on the right and one runner on the left (see diagram 1). Ensure that the runners are correctly fixed in their housing (see diagram 2)
2. Place the shelf in the 2 runners. (see diagram 3)
3. Place a locking dowel in each of the 2 holes located at the front of the shelf, in the upper section. These pins then fix the shelf with respect to the runner and prevent any unwanted movement.
4. Start by placing bottles in each recess of the back row with the base of the bottle towards the back.
5. Continue by placing the bottles in the opposite direction on the front row.
6. Continue stacking the bottles, ensuring that no bottles touch the back wall.
7. A storage shelf can support a maximum of 6 rows of 12 bottles, i.e.72 traditional Bordeaux bottles (97 kg).

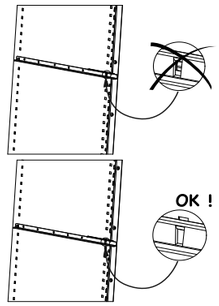

Diagram 2

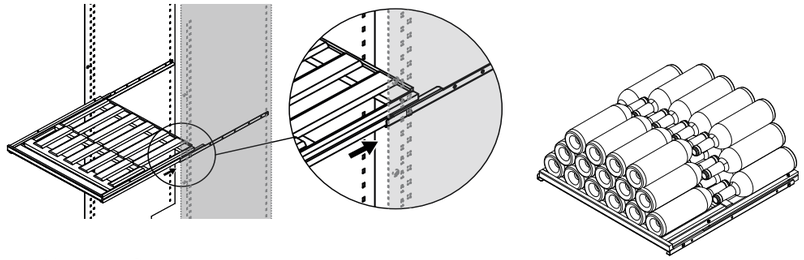

Diagram 3

5/ LAYOUT – STORAGE

Installing a shelf in display version

To install bottles on a display shelf, proceed as follows:

1. Insert 2 runners in the shelf support strips. For each shelf, position one runner on the right and one runner on the left (see diagram 1 and 2).
2. Place the shelf in the 2 runners (see diagram 3).
3. Place a locking dowel in each of the 2 holes located at the front of the shelf, in the upper section. These pins then fix the shelf with respect to the runner and prevent any unwanted movement.
4. Start by placing bottles in each recess of the back row with the base of the bottle towards the back (6 traditional Bordeaux bottles).
5. Continue stacking the bottles on the back row (6+6+6+6 = 24 traditional Bordeaux bottles), ensuring that no bottles touch the back wall.
6. To display your bottles, place them vertically at the front of the shelf (maximum capacity : 6 traditional Bordeaux bottles).
7. In display version, the shelf has a maximum capacity of 30 traditional Bordeaux bottles.

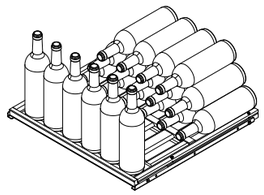

Installing a shelf in sliding version

To install bottles on a sliding shelf, proceed as follows:

1. Insert 2 runners in the shelf support strips. For each shelf, position one runner on the right and one runner on the left (see diagram 1 and 2).
2. Place the shelf in the 2 runners (see diagram 3).
3. Place a locking dowel in each of the two holes located at the back of the shelf, in the upper section. These pins prevent the shelf from sliding all the way out of the cabinet.
4. Start by placing bottles in each recess of the back row with the base of the bottle towards the back.
5. Continue by placing the bottles in the opposite direction on the front row.
6. A sliding shelf can only hold a single row of bottles (maximum of 12 traditional Bordeaux bottles).
7. In the case of a mixed layout, for optimal accessibility, we recommend that you place the sliding shelves in the central and upper section of the appliance.

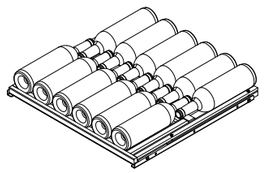

NEVER PULL OUT MORE THAN ONE LOADED SLIDING SHELF AT A TIME.

Layout advice

Your EuroCave wine cabinet has been designed to safely hold a maximum number of bottles. We recommend that you observe the following advice to optimize loading.

- **Distribute your bottles as uniformly as possible over the various cabinet shelves, in order to spread the weight. Also ensure that none of the bottles is touching the rear wall of the cabinet.**
- **Spread the load over the entire cabinet rather than placing bottles all at the top or all at the bottom.**
- **Observe the loading instructions for the specific storage layout of your cabinet and never stack bottles on a sliding shelf.**
- **If you have sliding shelves, it is preferable to position them in the central and upper section of your cabinet to facilitate daily access.**
- **In the same way, place one or two bottles of each of your different wines on the sliding shelves and keep spare bottles on the storage shelves. You then simply replace bottles when they are consumed.**

NB: Never modify the position of the stiffener in your cabinet (see description page 6) without first consulting your retailer and never handle this part when the cabinet is loaded.

To ensure that your cabinet functions optimally, we recommend that you fill it to at least 75 % of its capacity.

6/ USING YOUR WINE CABINET FOR THE FIRST TIME

1. Connection and starting up

Wait 48 hours before plugging in your wine cabinet.

To switch it on, press and hold down button ⏻ for 3 seconds.

Have your plug checked (presence of fuses, amps and 30 mA circuit breaker). Do not plug several cabinet into a multi-socket.

II-A. Description (1-temperature V-LAPREMIERE-S, V-LAPREMIERE-M, V-LAPREMIERE-L models)

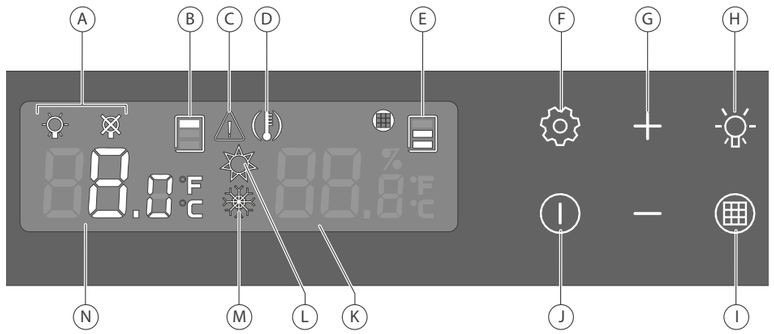

The tactile keys are very sensitive.
There is no need to apply force, only a light touch is required to register the command.
Remember to remove your finger from the panel between each press.

A Lighting mode
B Temperature zone
C Sensor fault alarm
D Temperature alarm
E Charcoal filter alarm
F Confirmation and setting access key
G Setting and selection keys
H Lighting mode confirmation and access key
I Charcoal filter meter access key
J ON / OFF key
K Humidity alarm
L Heater in-use light
M Compressor in-use light
N Temperature display

II-B. Temperature setting

Press and hold down the ⏻ key for 3 seconds to start up.



1 Press and hold down the ⚙ key for approximately 2 seconds.
The display will start to flash.

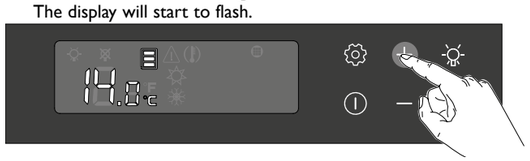

2 Press the ⊕ or ⊖ keys to set the desired temperature.



3 Press the ⚙ button to confirm.

The value shown on the display is the actual temperature inside the cabinet. It is therefore necessary to wait before your new setting takes effect.

- The default setting is 12 °C/54 °F (ideal maturing temperature). However, you can set the temperature from 6 to 18 °C/43 to 64,4 °F.
- Recommended temperature setting range for maturing wine: 10 -14 °C/50 - 57 °F.

N.B.: to function correctly, your cabinet must be placed in a room with a temperature of 0 - 35 °C/32 - 95 °F (solid door) or 0 - 30 °C/32 - 86 °F (glass door).

Transforming your wine maturing cabinet into a wine serving cabinet: you can use your 1-temperature cabinet as a wine serving cabinet to bring your white or red wines to the correct serving temperature (temperature setting possible from 6 - 18 °C / 43 - 64,4 °F):

- **for white wine: recommended setting range: 6 -10 °C / 43 - 50 °F**
- **for red wine: recommended setting range: 15 -18 °C/ 59- 64 °F**

This cabinet can therefore be used as a red or white wine serving cabinet.

III-A. Description (multi-temperatures S-LAPREMIERE-L)

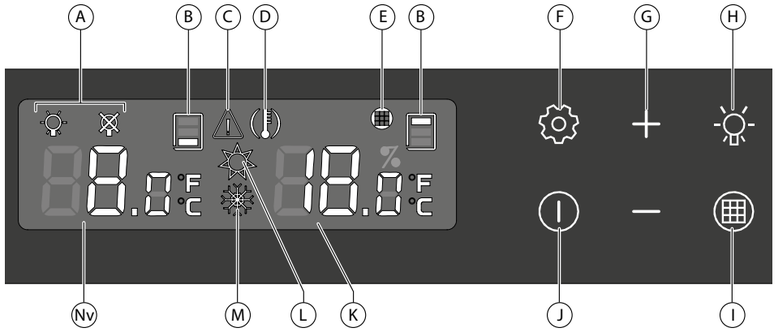

The tactile keys are very sensitive. There is no need to apply force, a light touch is sufficient to register the command. Remember to remove your finger from the panel between presses.

A Lighting mode
B Temperature zones concerned
C Sensor fault alarm
D Temperature alarm
E Charcoal filter alarm
F Confirmation and setting access key
G Setting and selection keys
H Lighting mode access and confirmation key
I Charcoal filter meter access key
J ON /OFF key
K High temperature in cabinet display
L Hot circuit indicator
M Cold circuit indicator
N Low temperature in cabinet display

III-B. Temperature setting

Recommended temperature setting range for the low temperature: 7 - 9°C / 45 - 48°F.
Recommended temperature setting range for the high temperature: 17 - 19°C / 63- 66°F.

Press and hold down the ⏻ key for 3 secs to power up.



1 Press and hold down the ⚙ key for approximately 2 secs.
The display will start to flash.



2 Press the ⊕ or ⊖ keys to set the desired temperature.

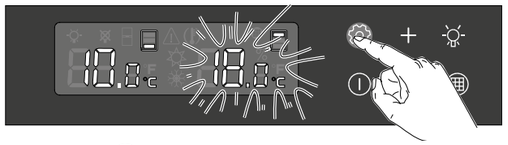

3 Press the ⚙ button to confirm. The right-hand display will flash.

The value shown on the display is the actual temperature inside the cabinet. It is therefore necessary to wait before your new setting takes effect.



4 Press the ⊕ or ⊖ keys to set the desired temperature.
5 Press the ⚙ button to confirm.

- For the low temperature, the default setting is 8°C / 46°F. However you can set the temperature between 5 - 10°C / 41 - 50°F.
- For the high temperature, the default setting is 18°C / 64°F.
- However you can set the temperature between 15 - 20°C / 59 - 68°F.

N.B: in order to operate correctly, your cabinet must be placed in a room with a temperature of 12-30°C / 54-86°F.

IV. Relative humidity level display (1-temperature model only)

Your wine cabinet has a function for measuring humidity levels, allowing you to see the level of relative humidity inside the appliance, when the setting is 9 - 15°C.
The ideal level of humidity is above 50% and ideally between 60 and 75%.

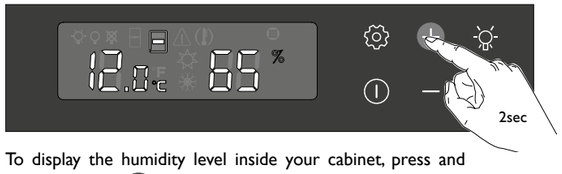

To display the humidity level inside your cabinet, press and hold down the ⊕ button for 2 seconds.

If you want to increase the level of relative humidity in your cabinet, pour the equivalent of one glass of water on the humidity cartridge located on the bottom of the cabinet. You need to remove your bottles before.

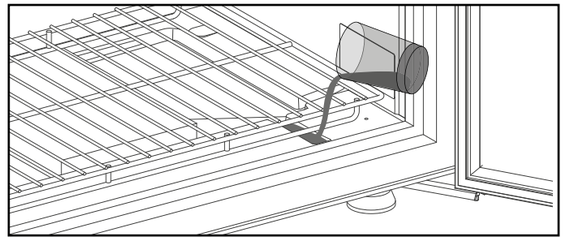

In a particularly dry environment and/or in not very good weather conditions (e.g. winter), you can use the "Hygro++" humidity kit which allows you to increase the level of relative humidity inside your wine cabinet.

V. Setting the lighting mode

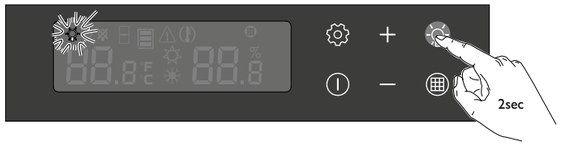

1 Press 2 seconsd the ⚙ key. The indicator of the active mode will flash

There are 2 setting options for lighting:

Permanent lighting (mood lighting for a cabinet fitted with a glass door, for example).

Lighting disabled

VI. Charcoal filter meter display

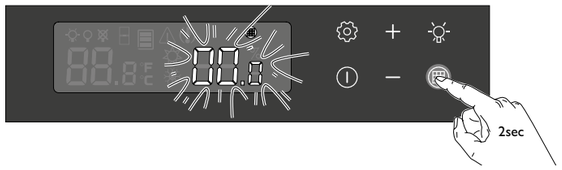

When using the filter for the first time or replacing it, set the meter to 365.

1 Press 2 seconds the ▦ key.
The display will flash.



2 Press the ⊕ key to set to 365.

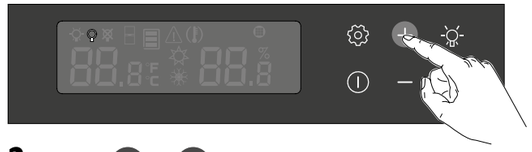

2 Press the ⊕ or ⊖ keys to select the desired mode.
3 Press the ⚙ key to confirm.

Precaution: bright light, never look directly at the LED beam.

Replacement of the LEDs on the control panel must only be carried out by a qualified electrician.



3 Press the ▦ to confirm
The alarm display will switch off

You can consult the meter by pressing the ▦ key.

The charcoal filter must be replaced every year.

7/ EVERYDAY MAINTENANCE

Your EuroCave cabinet is a tried and tested appliance.

Maintenance operations to be carried out approximately once a year

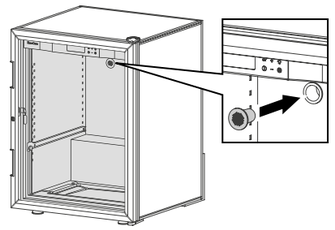

- **Unplug and unload the appliance.**
- **Clean the water drain at the bottom of the wine cabinet. Pay attention that nothing is blocking this drain.**
- **Regularly vacuum the condenser at the back of the appliance.**
- **Clean the inside of the compartments with water and a gentle cleaning product.**
- **Rinse thoroughly.**
- **Dry it with a soft rag.**
- **Replace the active charcoal filter in the breather hole at the top of your cabinet.**
- **Remove the charcoal filter manually. It is available from your usual retailer It must be replaced by an original manufacturer's part.**
- **Check that the seals are in good condition. It is often necessary to clean the door seal. Using unsuitable cleaning products can cause premature ageing of the seals. Certain rules must therefore be followed: whenever you clean the seal, always rinse off any cleaning product with clear water. All traces of cleaning product must be removed from the seal. EuroCave only recommends using a mild soapy solution. If this proves insufficient, it is possible to occasionally use an ethanol-based solution, provided that the concentration used is less than 10% and that the seal is then rinsed thoroughly with clear water.**

Caring for glass elements:

- **To clean the glass elements of your cabinet, use a non-abrasive soft cloth which has had a suitable glass cleaning product applied to it.**

Regular monitoring of your cabinet and reporting any faults to your retailer will ensure that your appliance provides you with many years of faithful service.

8/ OPERATING FAULTS

Possible incidents	Causes	Corrective actions
The pictogram is displaying	The inner temperature is above 4°C compare to the setting temperature.	Check that the door is correctly closed. Check the condition of the door seal. If you placed a large amount of bottles in your cabinet in the last few hours, wait a while then check again. If the alarm is still displaying, contact your EuroCave retailer.
The pictogram is still displaying even though I have taken the corrective actions above	Operating fault	Unplug the cabinet and contact your EuroCave retailer.
The pictogram is flashing	The level of relative humidity has been <50% for over 72 hrs	• Pour a glass of water into the duct of the tray (see chapter 7, § IV). • In order to know how often to add water, count the number of days separating the 1st day you added water and the day when the pictogram was displayed After a few hours, the pictogram will disappear.
The appliance cannot lower the level of humidity to the desired value		• Empty the cabinet, remove the humidity cartridge and clean the tray. • Remove the black drainage tube placed at the bottom of the cabinet. The humidity will be directly discharged out of the appliance. Call the EuroCave retailer if the problem persists despite having carried out these different operations.
The pictogram is displaying	Charcoal filter alarm	Replace the charcoal filter (see chapter 4).
The pictogram is displaying	Temperature sensor fault alarm	Contact your EuroCave retailer.

Minimum duration of guarantee offered by the manufacturer: 3 years parts.

If your appliance does not seem to be working correctly, contact your EuroCave retailer.

9/ TECHNICAL FEATURES AND ENERGY DATA

LA PREMIERE	Height[1] mm	Width mm	Depth[2] mm	Weight when empty		Recommended temperature range Min T°(°C / °F) - Max T° (°C / °F)	
				Glass door (Kg)	Solid door (Kg)	Glass	Solid door
1 temperature							
V-LAPREMIERE-L	1825	680	690	92	78	0-30 / 32-86	0-35 / 32-95
V-LAPREMIERE-M	1480	680	690	79	68	0-30 / 32-86	0-35 / 32-95
V-LAPREMIERE-S	960	680	690	56	49	0-30 / 32-86	0-35 / 32-95
Multi-temperatures							
S-LAPREMIERE-L	1825	680	715	92	78	12-30 / 54-86	12-30 / 54-86

Control accuracy: +/- 1°C (2°F), display accuracy: +/- 1°C (2°F).

[1] Height including the top hinges and the feet, adjusted to mid-height.

[2] Depth including the separator at the back of the cabinet for air ventilation. Handle not included.
According to delegated regulation (EU) 2019/2016 of the European Commission, access energy data about our appliances on the EPREL database by scanning the QR code visible on your appliance's energy label.

The use of glass doors can alter your wine cabinet's performance in some extreme temperature conditions.

9/ TECHNICAL FEATURES AND ENERGY DATA

Data relating to American energy consumption regulations

Reference	Model	Type of door	United States[1] *115V 60Hz - R600a gas*
			Annual energy consumption *kWh/yr*
V-LAPREMIERE-L	Single temperature	Solid Door	172
V-LAPREMIERE-L	Single temperature	Glass Door	212
V-LAPREMIERE-M	Single temperature	Solid Door	143
V-LAPREMIERE-M	Single temperature	Glass Door	172
V-LAPREMIERE-S	Single temperature	Solid Door	114
V-LAPREMIERE-S	Single temperature	Glass Door	143
S-LAPREMIERE-L	Multi-temperatures	Solid Door	172
S-LAPREMIERE-L	Multi-temperatures	Glass Door	212

[1]Comply with DEPARTMENT OF ENERGY - 10 CFR Part 430 - Energy Conservation Program: Energy Conservation Standards for Miscellaneous Refrigeration Products.

Standards
Your product complies with the following standards:

1 – ELECTRICAL SAFETY DIRECTIVE (2014/35/EU) 2014/35/EU
IEC 60335-1: 2010 + A1 : 2013 + A2: 2016
IEC 60335-2-24: 2010 + A1: 2019 + A2: 2019

2 – EMC DIRECTIVE 2014/30/EU
Standards
EN 55014-1: 2017
EN IEC 55014-2: 2021
EN IEC 61000-3-2: 2019
EN 61000-3-3: 2013
EN 62233: 2008

3 – ENVIRONMENT
Delegated regulation
2019/2016/EU
Regulations
2017/1369/EU
2019/2019/EU

Directive 2011/65/EU



R600a

Depending on the country, EuroCave wine cabinets may contain flammable refrigerant gas (R600a: ISO BUTANE).

NOTES

NOTES

NOTES

EUROCAVE

Leader dans le domaine de la conservation, la présentation et le service des vins depuis plus de 40 ans, EuroCave vous propose des solutions adaptées à chacun de vos besoins. Cave à vin, rangements, climatiseurs de cave, système de Vin au verre…n'hésitez pas à contacter votre revendeur EuroCave pour toute information complémentaire !

Leader in the wine preservation, presentation and service sector for over 40 years, Eu roCave offers you solutions adapted to every one of your requirements. Wine cabinets, storage layouts, cellar conditioners, wine by-the-glass system… don't hesitate to contact your EuroCave (or Around Wine) dealer for further information!

Seit mehr als 40 Jahren führend im Bereich der Lagerung, der Präsentation und dem Ausschank von Weinen schlägt Ihnen EuroCave Lösungen vor, die jedem Ihrer Bedürfnisse angepasst sind: Wein-, Zigarrenklimaschränke, Weinkeller-Kompaktklimaanlagen, Geräte für den glasweisen Offenausschank,Weinkeller-Regalsysteme. Zögern Sie nicht länger, setzen Sie sich mit Ihren EuroCave-Händler in Verbindung,wenn Sie noch irgendwelche Fragen haben!

Líder en el campo de la conservación, presentación y el servicio de vinos desde hace 40 años, EuroCave le propone soluciones adaptadas a cada una de sus necesidades. Bodegas, estanterías, climatizadores de bodegas, sistemas de vinos a la copa… ¡Para toda información complementaria, no dude en contactar a su distribuidor EuroCave!

EuroCave, al meer dan 40 jaar toonaangevend op het gebied van het behoud, de presentatie en het serveren van wijn, levert oplossingen aangepast aan elke behoefte. Wijnkasten, opbergsystemen, klimaatregelaars, Vin au verre-systeem….neem gerust contact op met uw EuroCave-dealer voor aanvullende informatie!

Leader nel settore della conservazione, della presentazione e del servizio dei vini da più di 40 anni,
EuroCave vi propone delle soluzioni adatte a ciascuno dei vostri bisogni. Cantinette per vini, sistemi di stoccaggio, climatizzatori da cantina, sistemi di Vino al bicchiere …. non esitate a contattare il vostro rivenditore EuroCave per qualsiasi informazione complementare!

作为红酒储藏、陈列和服务的佼佼者，在过去的40年，EuroCave一直致力于为您量身定制适合您的方案。EuroCave（环球葡萄酒）的经销商竭诚为您提供任何关于酒柜、储藏布局、酒窖调节、杯装系统红酒问题的资料。

身為紅酒儲藏、陳列和服務的佼佼者，在過去的40年，EuroCave一直致力於為您量身定制適合您的方案。EuroCave（環球葡萄酒）的經銷商竭誠為您提供任何關於酒櫃、儲藏布局、酒窖調節、杯裝系統紅酒問題的資料。



Groupe Eurocave - Villeurbanne, France - RCS Lyon
B320316995
Photos are not contractually binding.
07/2022 - 10006731

www.eurocave.com