STM3900, STM4200, SBM3800, SBM4300,
WTM2800, WTM3000, WTM3300, WTM3900,
WTM4200, WTM4400, WTM5200, WTE4200,
WTE5200, WTB2300, WTB2500, WTB2800,
WTB3400, WTB3700, WBM3700, WBM3800,
WBM4000, WBM4300, WBM5100, WBE4300,
WBE5100, WRM3700, WRM4300, WFM3000,
WFM3600, KTM2800, KTM3000, KTM3300,
KTM3600, KTM3900, KTM4200, KTM4400,
KTM5200, KBM3800, KBM4300, KBM5100,
WTB3100, WTB3400, WBB3100,WBB3400.

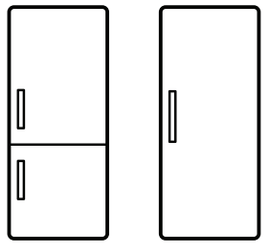

EN Refrigeration

IK010 Integration kit
Installation manual

Electrolux

CONGRATULATIONS

Congratulations and thank you for choosing our integration kit. Before you install the integration kit, we recommend that you read through the entire installation manual.

To avoid the risks that are always present when you install an electrical appliance, it is important that the integration kit and appliance is installed correctly. Please read the safety instructions in this installation manual as well as the appliance's user manual to carefully to avoid misuse and hazards.

We recommend that you keep this instruction booklet for future reference and pass it on to any future owners.

After unpacking the integration kit, please check it is not damaged. If in doubt, do not use the integration kit but contact your local Electrolux Customer Care Centre.

BEFORE YOU CALL

Please ensure you read the instruction manual fully before you call for service, or a full service fee could be applicable.

INFORMATION ON DISPOSAL FOR USERS

ENVIRONMENT!

- Most of the packaging materials are recyclable. Please dispose of these materials through your local recycling depot or by placing them in appropriate collection containers.
- If you wish to discard this product, please contact your local authorities and ask for the correct method of disposal.

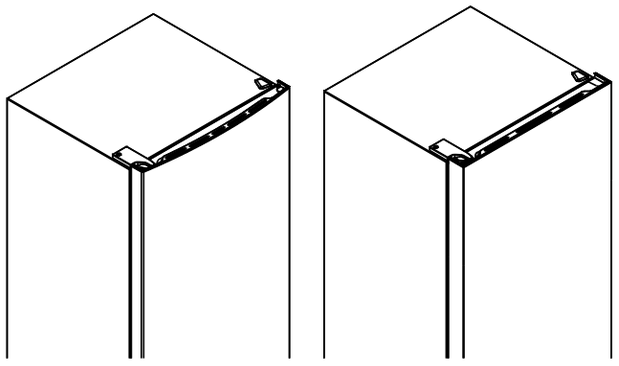

CURVE DOOR FLAT DOOR

CONTENTS

3 **General warnings**
4 **Refrigerator integration kit items**
5 **Cupboard dimensions**
8 **Installation of 120° hinge**
9 **Preparation**
9 **Attaching top hinge bracket**
10 **Attaching slide-housing to refrigerator doors**
12 **Placing refrigerator in cupboard**
12 **Refrigerator alignment**
13 **Securing refrigerator in cupboard**
14 **Attaching slide-bar to cupboard door**

GENERAL WARNINGS

Please read the user manual carefully and store in a handy place for later reference. Pass the user manual on to possible new owners of the appliance.

NOTE: We strongly recommend that a professional builder/cabinetmaker builds this unit into required cabinetry prior to finished installation in customer's kitchen. Electrolux cannot take responsibility for any installation issues when customer retrofits this product into cabinetry. Cabinet door height built in excess of refrigerator door height will be unsupported and risk bowing.

NOTE: Please refer to your Appliance User Manual for warnings relating to the appliance.

SYMBOLS

IMPORTANT!

This symbol indicates tips and information about use of the appliance.

ENVIRONMENT!

This symbol indicates tips and information about economical and ecological use of the appliance.

REFRIGERATOR INTEGRATION KIT ITEMS

Because this kit is common to a variety of models, you need to select the items required to suit your model. The items required for the models covered in this instruction booklet are shown below.

Those items not required on your particular model should be discarded.

Item	Quantity in kit	Quantity required		Description
		Two door model	Single door model	
Top hinge bracket PNº 1433129	1	1	1	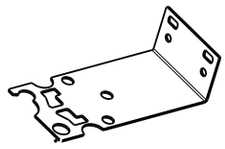
Slide-housing (Curve door) PNº 1445132	2	2	1	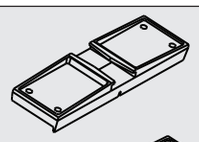
Slide-housing (Flat door) PN" A04098602	2	2	1	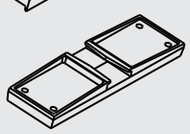
Slide-bar PNº 1421620	2	2	1	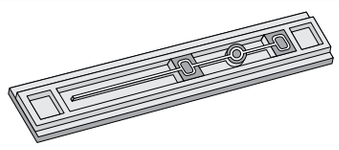
Location bracket front footing PNº 1444993 Note: this part is to be used on all models other than WTB2300, WTB2500, WTB2800 WTB3100, WTB3400 WBB3100 & WBB3400.	1	1	1	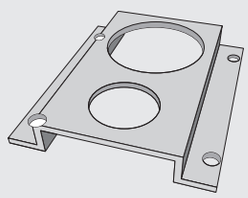
Refrigerator screws PNº 741249	8	8	4	
Cupboard screws PNº 1449422	12	12	8	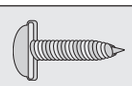
120º hinge PN" 1457832	5	5 (3+2)	3	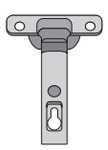
Mounting plate for hinge PNº 1458211	5	5 (3+2)	3	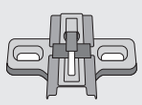
Self tapping wood screws PNº 1458212	20	20	12	
Z bracket IK foot location PNº 808958001 (Used in models WTB2300, WTB2500, WTB2800, WTB3100, WTB3400, WBB3100 & WBB3400)	1	1	0	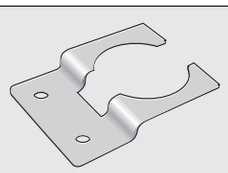

CUPBOARD DIMENSIONS

IMPORTANT!

Pages 5, 6, 7 and 8 should be given to the person responsible for cupboard design and construction.

The cupboard dimensions required for each model are shown on page 6, 7 & 8.

1. All sizes are **internal and measured in millimetres**.
2. It is important to ensure that the correct cupboard sizes are used to ensure adequate air flow around the refrigerator.
3. Cupboard hinges should be a 120° opening type. (Use hinges supplied).
4. Three hinges should be used on each cupboard door higher than 1000mm.
5. Ensure the refrigerator is not connected to a power supply whilst installation takes place.
6. Each operation should be carried out in the sequence specified in this instruction sheet.

*NOTE: All sizes are **internal and in millimetres**.*

Model	Dim 'A' (mm) minimum	Dim 'B' (mm)	Dim 'C' (mm)	Dim 'D'* (mm)	Dim 'E' (mm)	Dim 'G' (mm)	Dim 'H' (mm)	Dim 'I'* (mm)
2 door top freezer models								
WTB2300	1485	680	645	910	450	270	250	
WTB2500	1550	680	645	975	450	270	250	
WTB2800	1650	680	645	1075	450	270	250	
WTM2800, KTM2800	1640	680	700	1047	500	219	300	
WTM3000, KTM3000	1710	680	700	1117	500	219	300	
WTM3300, KTM3300	1810	680	700	1217	500	219	300	
WTB3100	1690	715	700	1110	500	298	300	
KTM3600	1730	680	795	1137	600	241	395	
WTB3400	1800	715	700	1220	500	298	300	**Please use the calculation below to measure Dimension 'I' for your specific model.**
WTM3900, KTM3900, STM3900	1810	680	795	1217	600	241	395	
WTM4200, WTE4200, KTM4200, STM4200	1730	740	795	1137	600	241	395	
WTM4400, KTM4400	1810	740	795	1217	600	241	395	
WTM5200, WTE5200, KTM5200	1810	740	895	1217	600	278	495	
2 door bottom freezer models								
WBB3100	1690	715	700	1110	500	298	395	
WBB3400	1800	715	700	1220	500	298	395	
WBM3700	1660	740	745	702	600	241	395	
WBM3800, KBM3800, SBM3800	1810	680	795	702	600	241	395	
WBM4000	1760	740	745	702	600	241	395	
WBM4300, WBE4300, KBM4300, SBM4300	1810	740	795	702	600	278	395	
WBM5100, WBE5100, KBM5100	1810	740	895	702	600		495	
single door models								
WFM3000	1810	680	700	–	500	219	300	
WFM3600	1810	680	795	–	600	241	395	
WRM3700	1810	680	700	–	500	219	300	
WRM4300	1810	680	795	–	600	241	395	

Step 1

Measure and confirm Dimension 'A'.

Step 2

To calculate Dimension 'I' use the equation below.

Dim 'I' = Dim 'A' - (Dim 'D' + 5mm) mm

Step 3

*Add cabinetry thickness to Dimension 'D' and Dimension 'I' for final measurement before construction.

CUPBOARD DIMENSIONS

*NOTE: All sizes are **internal and measured in millimetres**.*
For 'lettered' dimensions refer to the table on page 5.

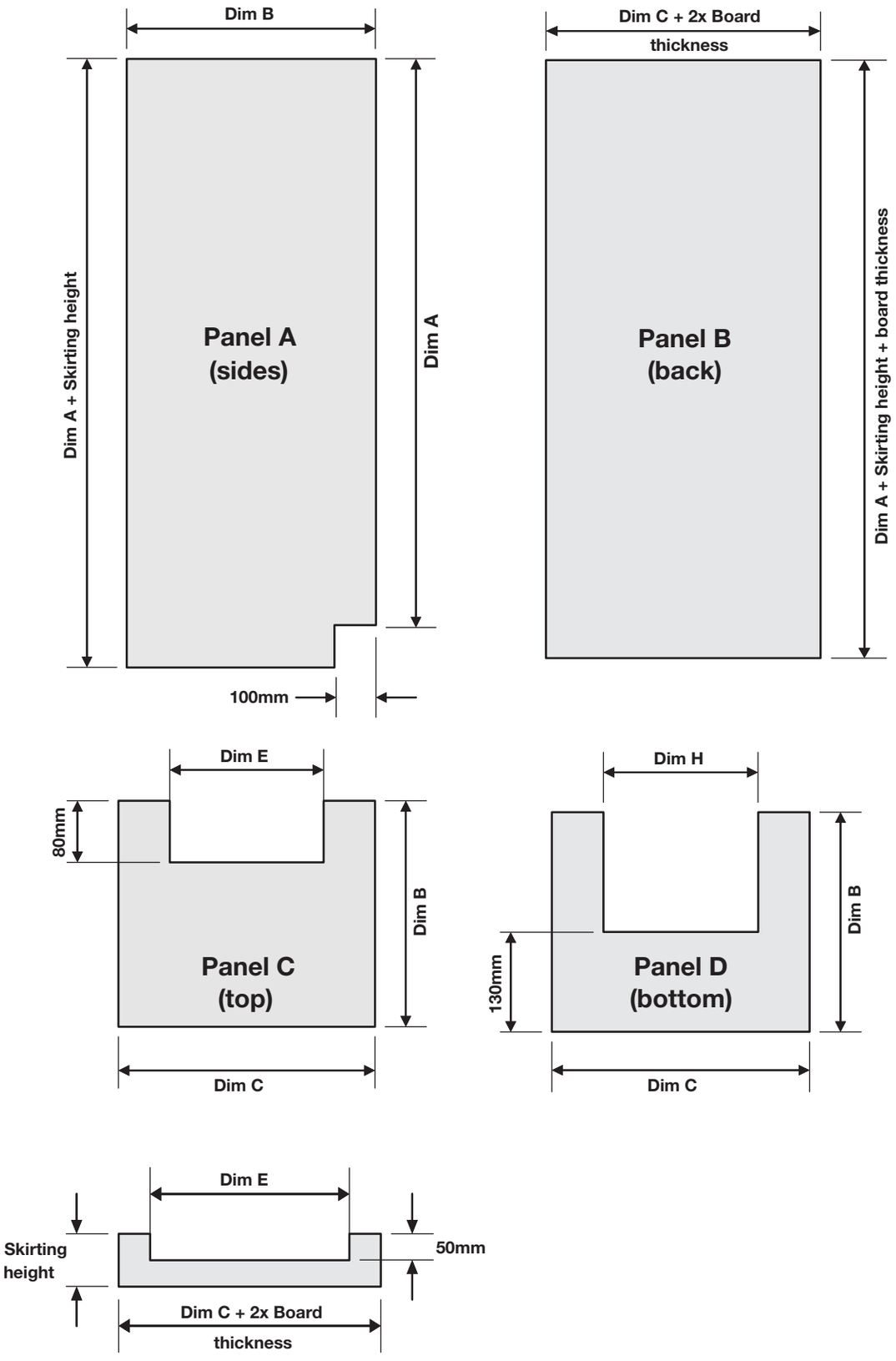

CUPBOARD DIMENSIONS

Clearances

When installed the refrigerator needs to have adequate air ventilation. It is important to ensure there is good airflow from the front to underneath and up the rear to the top of the cabinet (see diagrams).

Front airflow cut-out

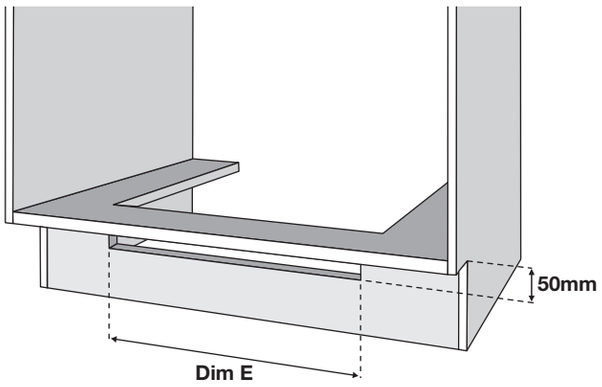

NOTE: A decorative grill can be fitted so long as it does not obstruct airflow and is removable for cleaning.

Bottom rear airflow cut-out

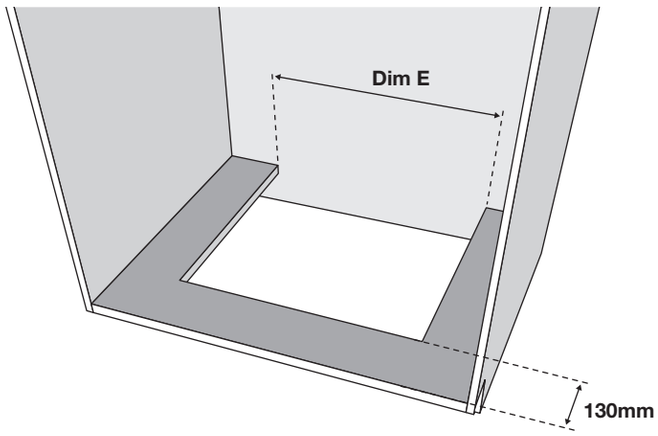

Top rear airflow cut-out

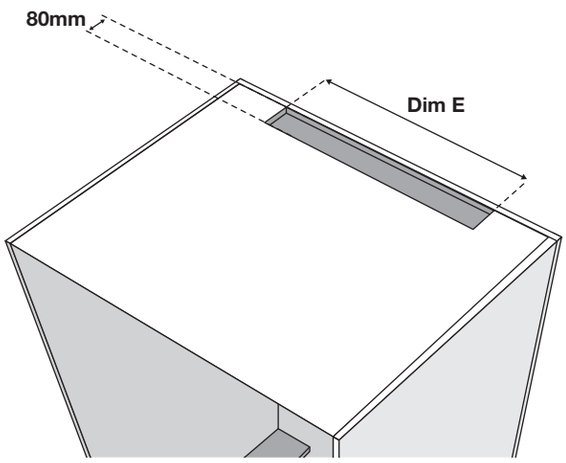

Airflow

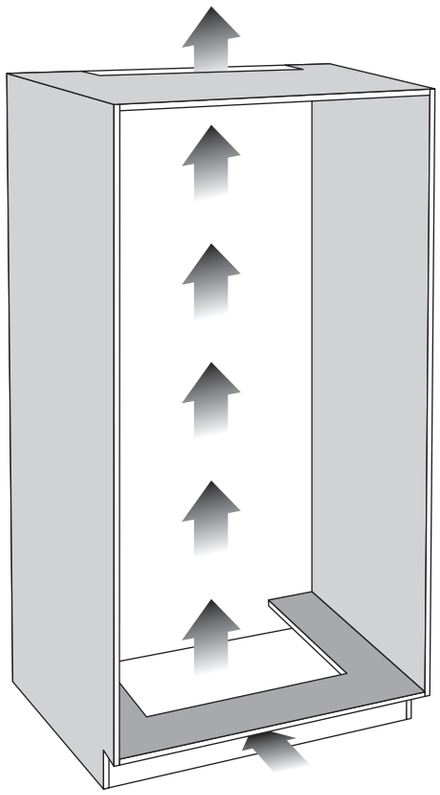

CUPBOARD DIMENSIONS

When positioned in a corner the clearance of Dim G on the hinge side of the cabinet will allow the doors to be opened enough to enable the removal of the crisper bins.

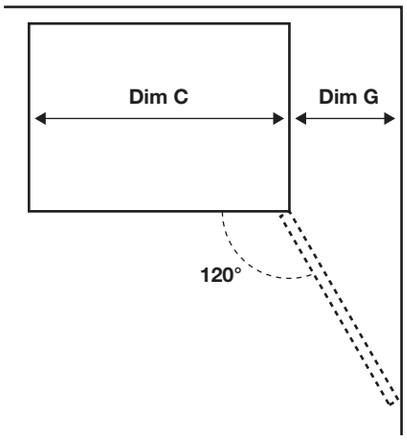

NOTE: Use the 120° hinges supplied with the kit to attach the cupboard door to the cupboard.

Attach the hinge to the door to ensure that door can have maximum opening, i.e. the door edge should not hit the cabinet when the door is fully open.

Cabinet construction
(top mount cupbord shown below)

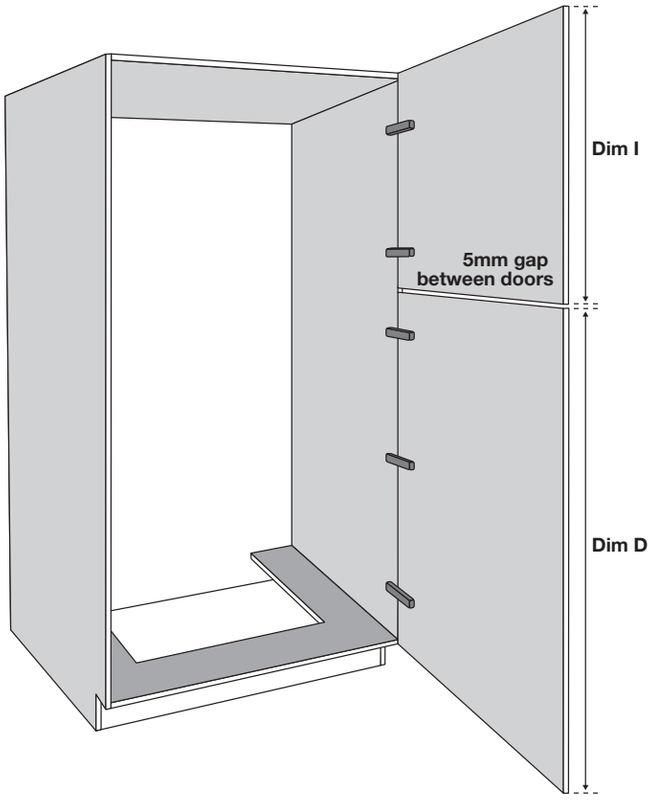

NOTE: If Dim D is bigger than 1000mm in height, 3 hinges are required to attach the cupboard door to the cupboard. If Dim D is smaller than 1000mm in height, 2 hinges are required/sufficient.

INSTALLATION OF 120˚ HINGE

Please follow the instructions below to install the 120º hinge.

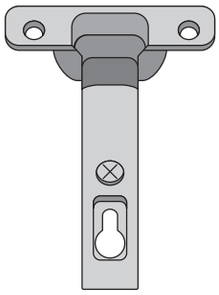

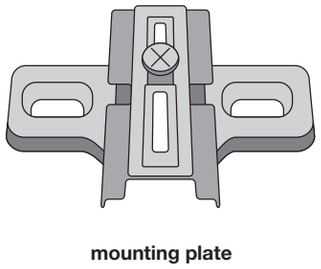

Attach mounting plate with 120º hinge and tighten the screw.

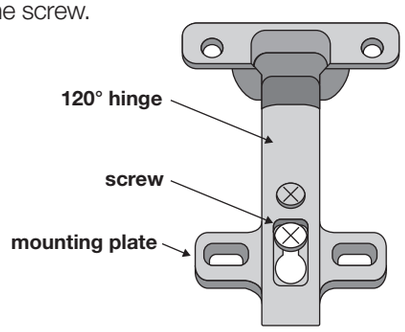

Use screws provided with the hinge to attach the cupboard door to the cupboard.

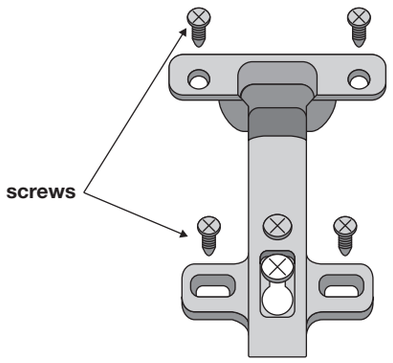

Use 120º hinge to attach the cupboard door to the cabinet.

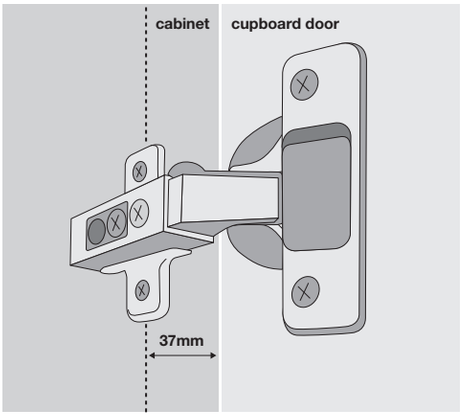

This dimension is typically 37mm (from centre line of mounting plate to the cupboard cabinet edge)

PREPARATION

1. Unpack refrigerator, removing foam packing.
2. Lay the refrigerator down on its back on a piece of soft packing material. Use caution and two people while laying the appliance down.
3. Remove top door stopper if fitted (Figure 1).
4. Place adjustable rollers in the fully retracted position by screwing height adjusting screw fully anti-clockwise (Figure 2). Do not remove the adjusting nut completely.
5. Stand upright.

Figure 1

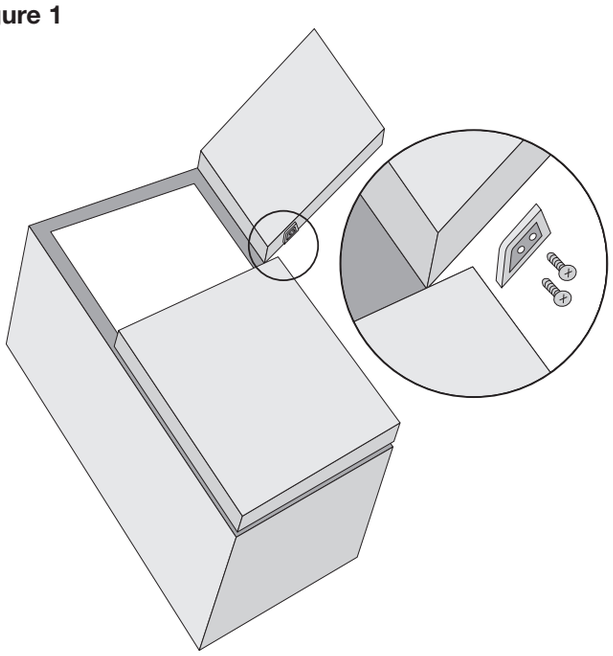

Figure 2

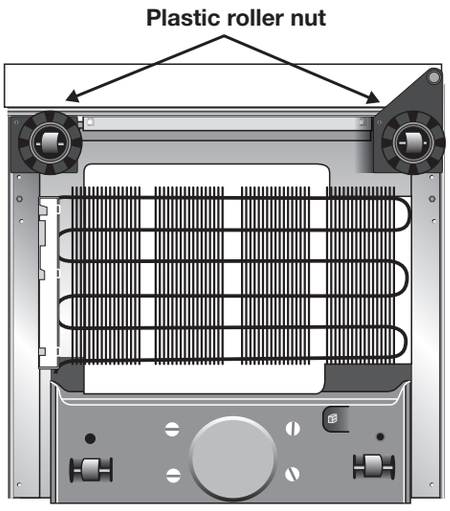

ATTACHING THE TOP HINGE BRACKET

1. Remove top hinge cover (Figure 3), cover clips off.
2. Remove the three (3) top hinge screws.
3. Elevate hinge.
4. Slide the top hinge bracket into position below the hinge.
5. Re-attach hinge and screws ensuring that refrigerator door is still correctly positioned.

IMPORTANT!

You must ensure that the refrigerator door is:

- Parallel with sides and top of cabinet.
- The gap between the door and cabinet is typically 12mm allowing the door gasket to act correctly (Figure 4).

Note: Ensure the gasket acts correctly, i.e. doesn't make a noise or leave gaps when the door is closed.

6. Recap hinge cover into position.

Figure 3

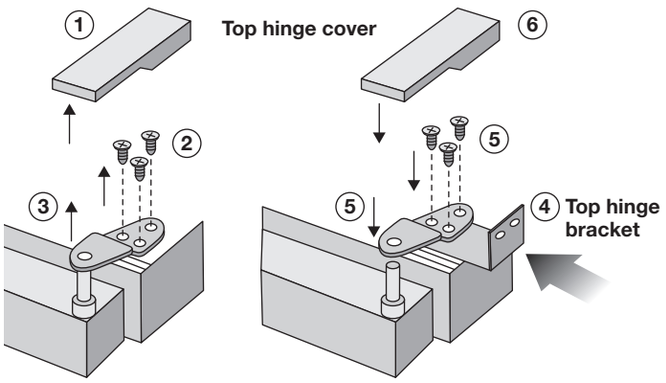

Top hinge bracket fitted

In case left side hinge

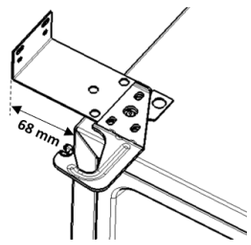

In case right side hinge

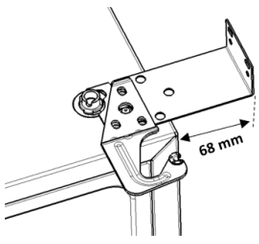

Figure 4

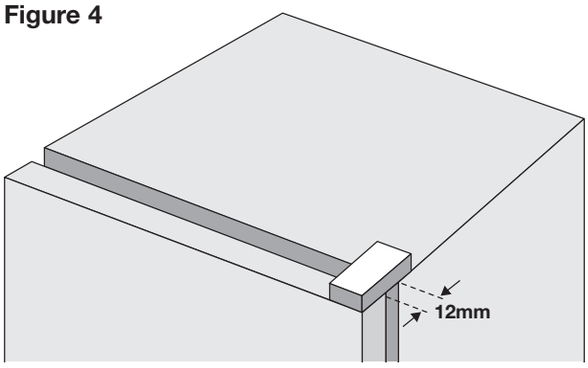

ATTACHING SLIDE-HOUSING TO REFRIGERATOR DOORS

1. Ensure slide-housing is positioned squarely as shown.
2. Ensure that the slide-housing is positioned on the door as shown in the diagrams.

Slide housing (Curve door version)

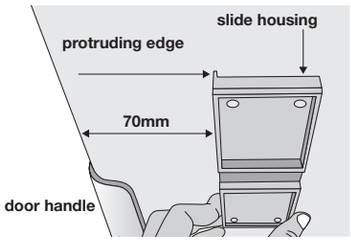

Slide housing (Flat door version)

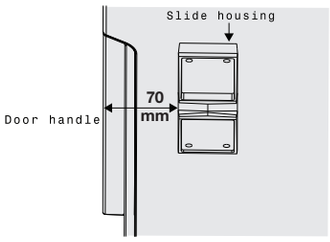

Note: The slide-housing 'protruding edge' side must always be closest to the door handle side (diagram right).

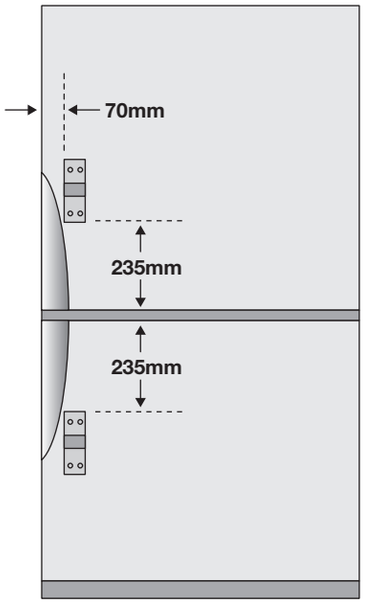

2 door bottom freezer

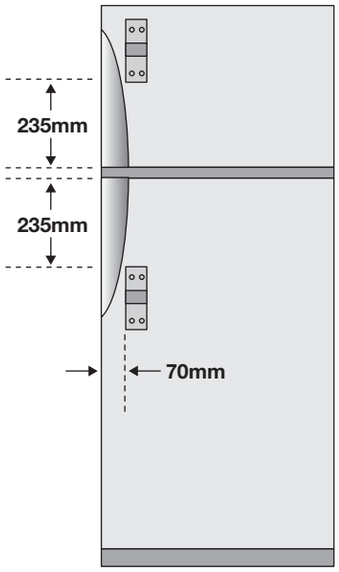

2 door top freezer

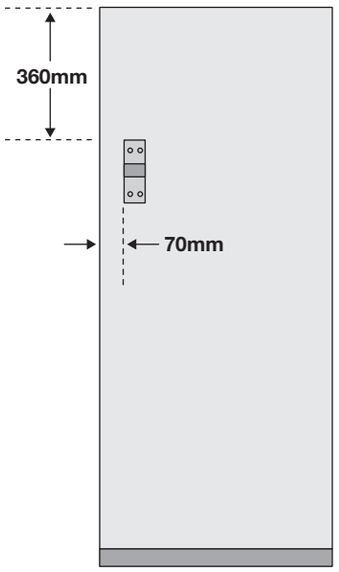

single door

...and secure with tape.

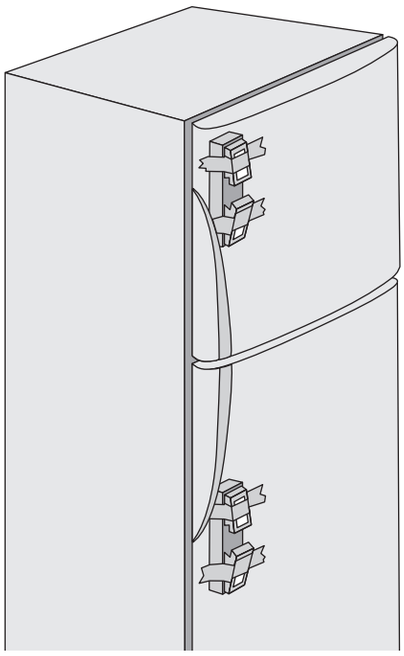

two door

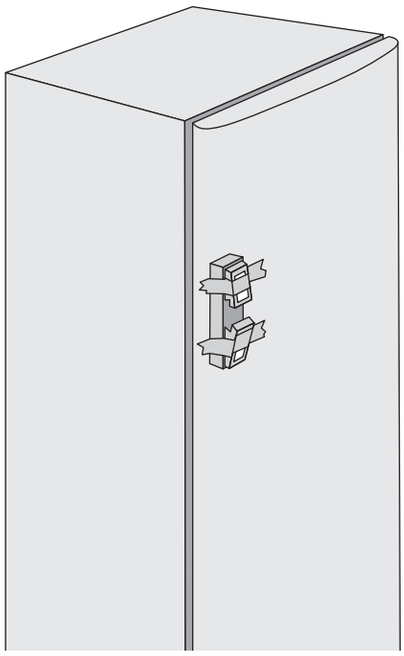

single door

NOTE: For single door models, the door handle must be completely removed to provide clearance to the cupboard door and the resulting handle mounting holes hidden with a cover. Installer must use a tape or plastic cover that suits the installation appearance (not supplied).

3. While the slide-housing is taped in position, punch a small hole in the refrigerator door skin corresponding to the four (4) holes in the housing (Figure 5).
4. The holes should be punched, not drilled, to ensure the maximum thread can be formed in the metal.
5. Screw four (4) refrigerator screws into the holes securing the housing in place. The refrigerator screws are supplied in kit (Figure 6).

If you have a two door refrigerator, repeat this process for the other door.

Figure 5

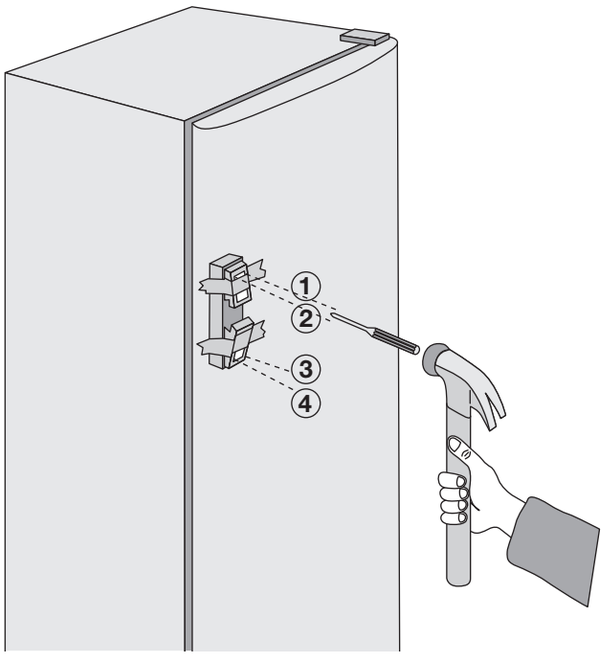

Figure 6

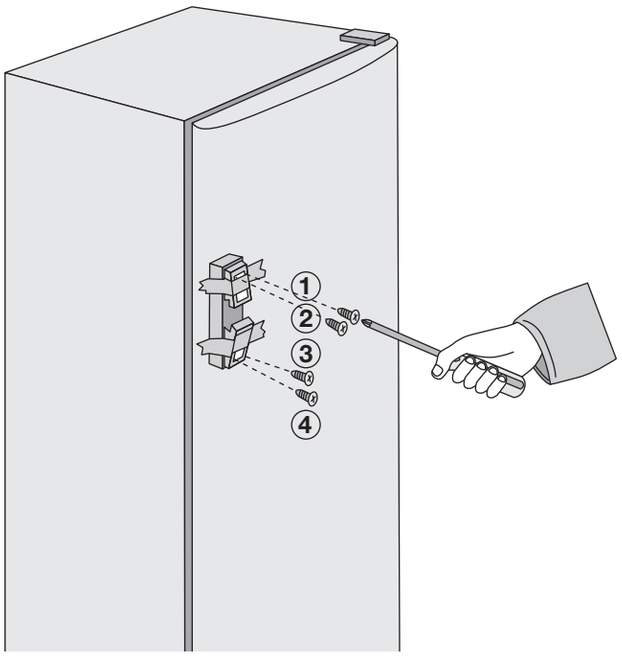

PLACING REFRIGERATOR IN CUPBOARD

1. Ensure cupboard is level and square.
2. Put refrigerator into cupboard. Use caution and two people if necessary.
3. Insert slide bars into slide-housings (Figure 7).

NOTE: Ensure the refrigerator is level in the cupboard. Raise the front of the refrigerator by using the height adjusting screws.

Figure 7

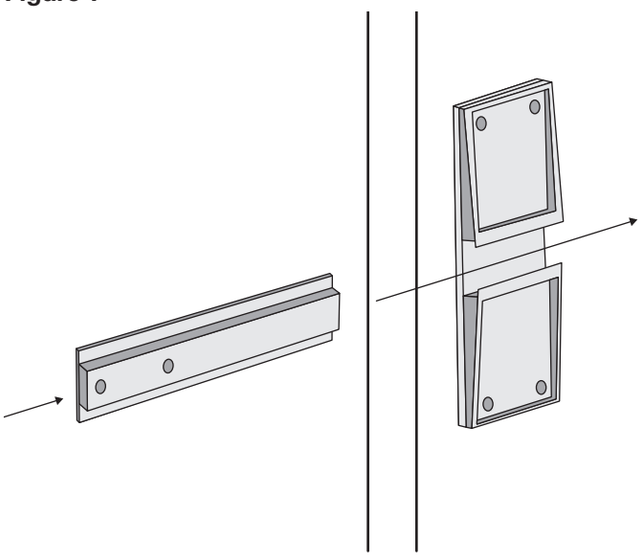

REFRIGERATOR ALIGNMENT

Position the refrigerator in the cupboard so that:

1. Top hinge bracket is against cupboard wall (Figure 8).
2. Front of refrigerator cabinet (with doors open) is parallel to and approximately 87mm from the front of the cupboard (Figure 9. Figure 9a for selected models only).
3. Position bottom location bracket as shown (opposite hinge side Figure 10). Fit adjustable foot in appropriate hole as shown and level refrigerator. (Figure 10a & 10b for selected models only.)

NOTE: Do not screw in place yet.

NOTE: The front adjustable rollers may need raising (rotate anti-clockwise when viewed from above) to achieve this.

Figure 8

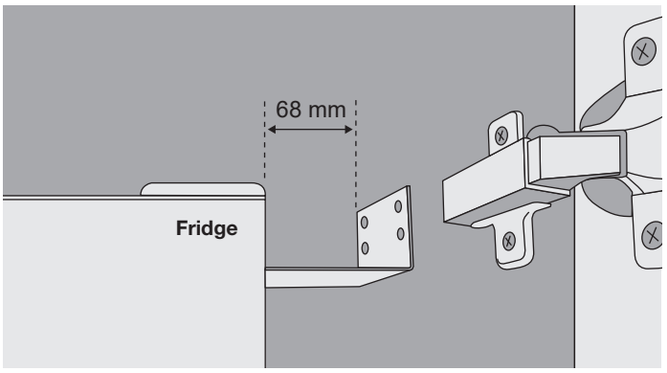

Top Hinge Bracket fitted – note the space between the cupboard and the side of the refrigerator is to be approximately 68mm.

Figure 9

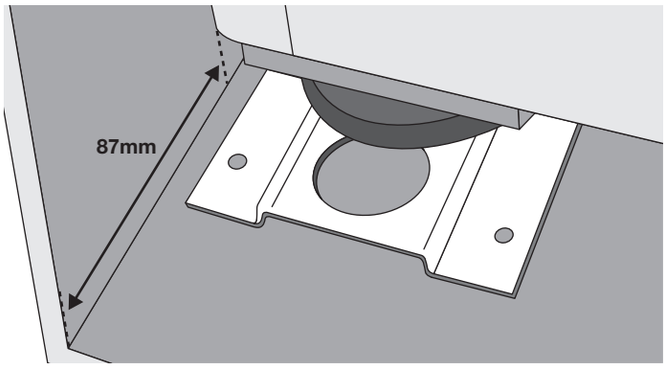

Figure 9a

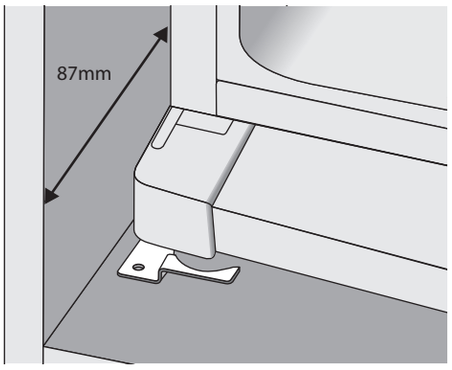

For WTB2300 & WTB2500

Figure 10

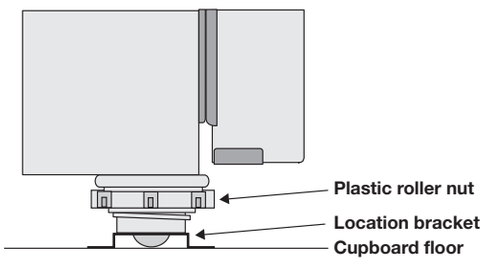

Figure 10a

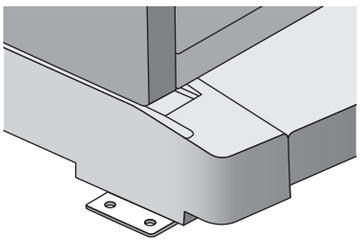

For WTB2300 & WTB2500

Figure 10b

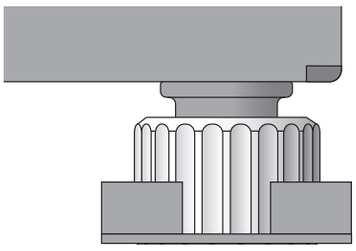

For WTB2800, WTB3400 & WTB3700

4. Slowly close the cupboard door (pushing the refrigerator back) until it is slightly ajar, i.e. with a gap of about 4mm (Figure 11).

You may have to reposition the refrigerator back or forward until the 4mm gap is obtained. Ensure that the refrigerator remains parallel as you do this. Once you have the correct gap, proceed to the next step.

Figure 11

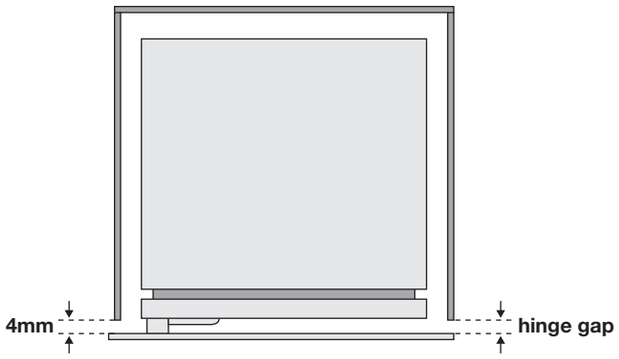

NOTE: The gap is left to ensure the refrigerator door will be allowed to close fully for a good gasket seal.

SECURING THE REFRIGERATOR IN THE CUPBOARD

NOTE: When attaching **all screws** *to cupboard, first drill a 2mm pilot hole in the correct position. This will allow easy hand insertion of self tapping screw.*

Now that the refrigerator is correctly positioned:

1. Screw in top hinge bracket to the cupboard wall using 4 cupboard screws provided. This will secure the top of the refrigerator (Figure 12).
2. Screw down foot bracket to cupboard floor with 2 cupboard screws. This will secure the bottom of the refrigerator (Figure 13. Figure 13a for selected models only).

Figure 12

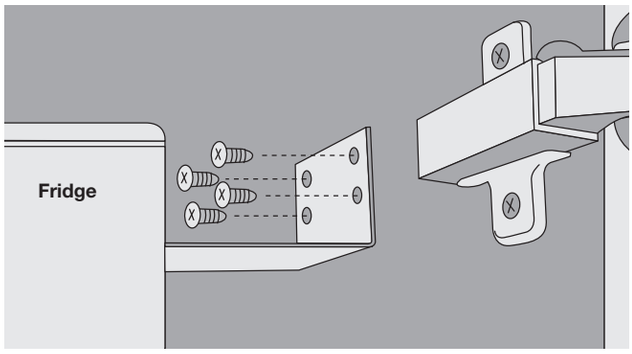

Figure 13

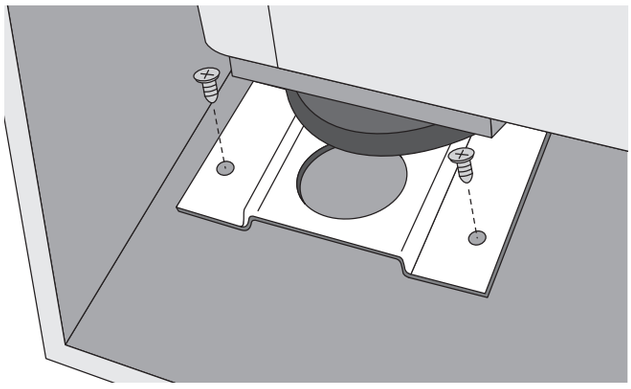

Figure 13a

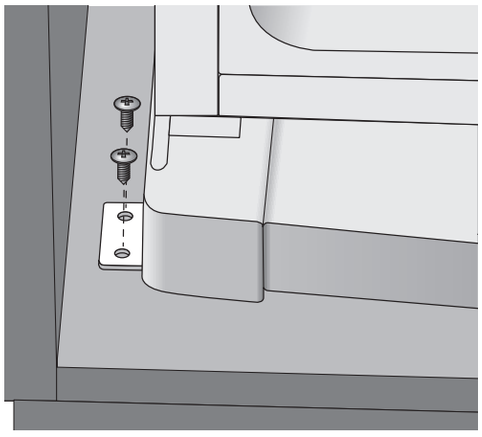

For WTB2300 & WTB2500

ATTACHING SLIDE-BAR TO THE CUPBOARD DOOR

1. Fully open cupboard door (120°).
2. Open refrigerator door until it rests against the cupboard door.
3. Position slide-bar in slide-housing so that all three holes are visible when both doors are fully open (120°). This position is typically 125mm from the edge of the cupboard door (Figure 14).

Whilst slide-bar is still in housing:

4. Rotate slide-bar to uppermost alignment, mark a line on cupboard door (Figure 15).
5. Rotate slide-bar to lower alignment, mark a line on cupboard door (Figure 16).
6. Remove slide-bar and draw line to indicate central alignment (Figure 17).
7. Replace slide-bar and align to centre line marked in previous operation (Figure 18).
8. Secure slide-bar by driving a cupboard screw into the centre of the inner slot (Figure 19).

   Gently test closing of door.
9. If the action is smooth and the slider does not move in relation to the cupboard door, drive another cupboard screw into the end slot (Figure 20).
10. Open and close the door a number of times if the action is not smooth. Loosen the screws and re-adjust slide-bar. Once the desired smooth action is achieved attach the central locking screws (Figure 21).

Figure 14

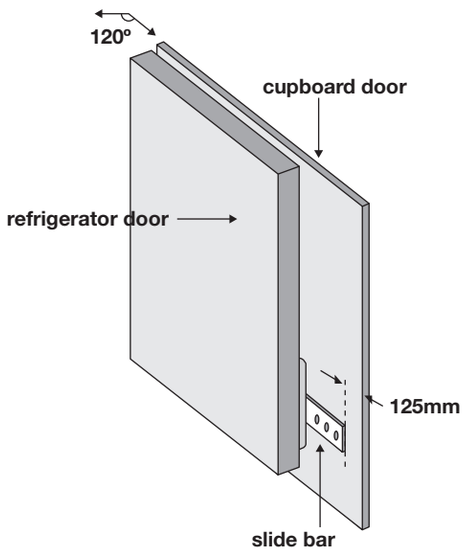

Figure 15

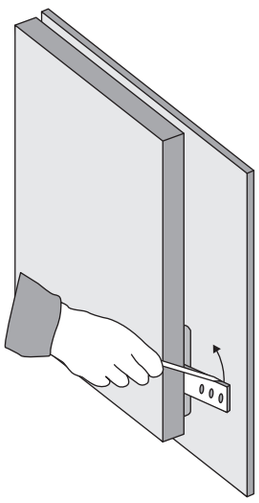

Figure 16

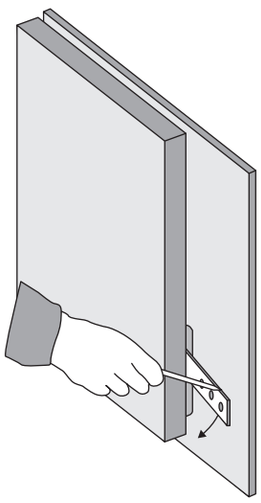

Figure 17

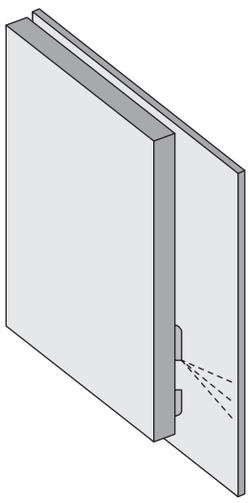

Figure 18

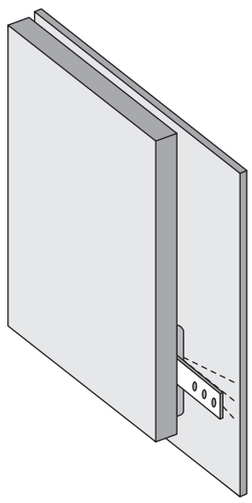

Figure 19

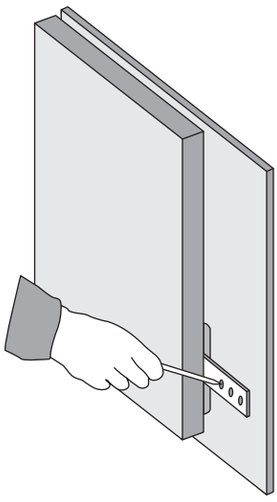

Figure 20

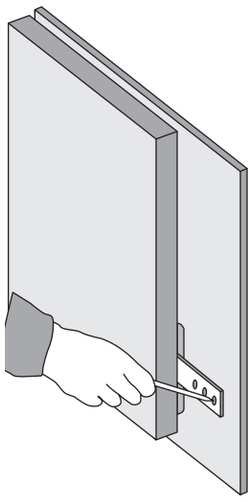

Figure 21

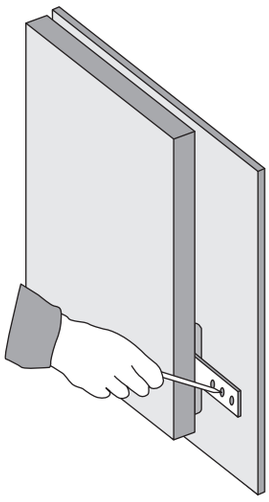

REPEAT THIS PROCEDURE FOR THE SECOND SLIDE BAR IF NECESSARY.

THIS COMPLETES THE INSTALLATION PROCEDURE.

CUSTOMERS PLEASE NOTE:

In the unlikely event service is required on an integrated refrigerator during the warranty period, it is the customer's responsibility to remove the refrigerator from the cupboard. Removal of the refrigerator from the cupboard is not covered by warranty. For full details of the warranty terms and conditions, please refer to the information contained with your appliance.

Electrolux Home Products Australia
telephone: 1300 363 640
fax: 1800 350 067
email: customercare@electrolux.com.au
web: www.electrolux.com.au

Electrolux Home Products New Zealand
telephone: 0800 234 234
fax: 0800 363 600
email: customercare@electrolux.co.nz
web: www.electrolux.co.nz

The Thoughtful Design Innovator.

Do you remember the last time you opened a gift that made you say "Oh! How did you know? That's exactly what I wanted!" That's the kind of feeling that the designers at Electrolux seek to evoke in everyone who chooses or uses one of our products. We devote time, knowledge, and a great deal of thought to anticipating and creating the kind of appliances that our customers really need and want.

This kind of thoughtful care means innovating with insight. Not design for design's sake, but design for the user's sake. For us, thoughtful design means making appliances easier to use and tasks more enjoyable to perform, freeing our customers to experience that ultimate 21st century luxury, ease of mind. Our aim is to make this ease of mind more available to more people in more parts of their everyday lives, all over the world. So when we say we're thinking of you, you know we mean just that.

The "Thinking of you" promise from Electrolux goes beyond meeting the needs of today's consumers. It also means we're committed to making appliances safe for the environment - now and for future generations.

Electrolux. Thinking of you.

Share more of our thinking at www.electrolux.com.au or www.electrolux.co.nz

P/No. A04633103

© 2013 Electrolux Home Products Pty Ltd.
ABN 51 004 762 341

WKMAN_IntKit_Nov13