Refrigerator

User manual

Free Standing Appliance

SAMSUNG

Contents

Safety information 4

What you need to know about the safety instructions 4
Important safety symbols and precautions: 5
Important safety precautions 6
How to minimize the energy consumption 7
This appliance is intended to be used in household and similar applications such as 7
Severe warning signs for transportation and site 8
Critical installation warnings 8
Installation cautions 10
Critical usage warnings 10
Usage cautions 12
Cleaning cautions 14
Critical disposal warnings 15
Additional tips for proper usage 16
Instructions about the WEEE 17

Installation 18

Refrigerator at a glance 19
Step-by-step installation 21
Door removal for entrance 33

Operations 41

Main panel 41
SmartThings (applicable models only) 52
Bixby (Voice recognition - applicable models only) 55
Dispenser panel (applicable models only) 57
Special features 58

Maintenance 73

Handle and care 73
Cleaning 77
Replacement 80

Troubleshooting 81

General 81
Do you hear abnormal sounds from the refrigerator? 87
SmartThings (applicable models only) 89

Open Source Announcement 90

Open Source Announcement 90

Appendix **91**

Safety Instruction 91
Install Instruction 91
Temperature Instruction 92
Information for model and ordering spare parts 96

Safety information

Before using your new Samsung Refrigerator, please read this manual thoroughly to ensure that you know how to operate the features and functions that your new appliance offers safely and efficiently.

What you need to know about the safety instructions

- Warnings and Important Safety Instructions in this manual do not cover all possible conditions and situations that may occur.
  It is your responsibility to use common sense, caution, and care when installing, maintaining, and operating your appliance.
- Because these following operating instructions cover various models, the characteristics of your refrigerator may differ slightly from those described in this manual and not all warning signs may be applicable. If you have any questions or concerns, contact your nearest service center or find help and information online at www.samsung.com.
- R-600a or R-134a is used as a refrigerant. Check the compressor label on the rear of the appliance or the rating label inside the fridge to see which refrigerant is used for your appliance. When this product contains flammable gas (Refrigerant R-600a), contact your local authority in regard to safe disposal of this product.
- In order to avoid the creation of a flammable gas-air mixture if a leak in the refrigerating circuit occurs, the size of the room in which the appliance may be sited depends on the amount of refrigerant used.
- Never start up an appliance showing any signs of damage. If in doubt, consult your dealer. The room must be 1 m^3 in size for every 8 g of R-600a refrigerant inside the appliance.
  The amount of refrigerant in your particular appliance is shown on the identification plate inside the appliance.
- Refrigerant squirting out of the pipes could ignite or cause an eye injury. When refrigerant leaks from the pipe, avoid any naked flames and move anything flammable away from the product and ventilate the room immediately.
  - Failing to do so may result in fire or explosion.
- To avoid contamination of food, please respect the following instructions:
  - Opening the door for long periods can cause a significant increase of the temperature in the compartments of the appliance.
  - Clean regularly surfaces that can come in contact with food and accessible drainage systems.
  - Clean water tanks if they have not been used for 48 h; flush the water system connected to a water supply if water has not been drawn for 5 days.
  - Store raw meat and fish in suitable containers in the refrigerator, so that it is not in contact with or drip onto other food.
  - Two-star frozen-food compartments are suitable for storing pre-frozen food, storing or making icecream and making ice cubes.
  - One-, two- and three-star compartments are not suitable for the freezing of fresh food.
  - If the refrigerating appliance is left empty for long periods, switch off, defrost, clean, dry, and leave the door open to prevent mould developing within the appliance.

Important safety symbols and precautions:

Please follow all safety instructions in this manual. This manual uses the following safety symbols.

⚠ WARNING

Hazards or unsafe practices that may result in **severe personal injury, property damage, and/or death**.

⚠ CAUTION

Hazards or unsafe practices that may result in **severe personal injury and/or property damage**.

NOTE

Useful information that helps users understand or benefit from the refrigerator.

These warning signs are here to prevent injury to you and others.

Please follow them carefully.

After reading this section, keep it in a safe place for future reference.

Safety information

Important safety precautions



WARNING; Risk of fire / flammable materials

⚠ WARNING

- When positioning the appliance, ensure the supply cord is not trapped or damaged.
- Do not locate multiple portable socket-outlets or portable power supplies at the rear of the appliance.
- Fill with potable water only.
- Connect to potable water supply only.
- Keep ventilation openings, in the appliance enclosure or in the built-in structure, clear of obstruction.
- Do not use mechanical devices or any other means to accelerate the defrosting process, other than those recommended by the manufacturer.
- Do not damage the refrigerant circuit.
- Do not use electrical appliances inside the food storage compartments of the appliance, unless they are of the type recommended by the manufacturer.
- This appliance is not intended for use by persons (including children) with reduced physical, sensory, or mental capabilities, or those who lack experience and knowledge, unless they have been given supervision or instruction concerning the use of the appliance by a person responsible for their safety.
- This appliance can be used by children aged from 8 years and above and persons with reduced physical, sensory or mental capabilities or lack of experience and knowledge if they have been given supervision or instruction concerning use of the appliance in a safe way and understand the hazards involved. Children shall not play with the appliance. Cleaning and user maintenance shall not be made by children without supervision. Children aged from 3 to 8 years are allowed to load and unload refrigerating appliances.
- If the supply cord is damaged, it must be replaced by the manufacturer, its service agent or similarly qualified persons in order to avoid a hazard.
- The socket must be easily accessible so that the appliance can be quickly disconnected from the supply in an emergency.
  - It must be outside the area of the rear of the appliance.
- Do not store explosive substances such as aerosol cans with a flammable propellant in this appliance.
- If the product is equipped with LED lamps, do not disassemble the Lamp Covers and LED lamps yourself.
  - Contact a Samsung service center.
  - Use only the LED Lamps provided by the manufacturer or its service agents.
- New hose-sets supplied with the appliance are to be used and old hose-sets should not be reused.

- Have the refrigerator's water supply connected only to a potable water supply. To operate the ice maker properly, water pressure of 206-861 kPa (30-125 psi) is required.
- For the most efficient use of energy, please keep the all inner fittings such as baskets, drawers, shelves on the position supplied by manufacturer.
- To get the best energy efficiency of this product, please leave all shelves, drawers and baskets on their original position.

How to minimize the energy consumption

- Install the appliance in a cool, dry room with adequate ventilation.
- Ensure that it is not exposed to direct sunlight and never put it near a direct source of heat (radiator, for example).
  - Not to block any vents or grilles is recommended for energy efficiency.
  - Allow warm food to cool down before placing it in the appliance.
  - Put frozen food in the refrigerator to thaw. You can then use the low temperatures of the frozen products to cool food in the refrigerator.
  - Do not keep the door of the appliance open for too long when putting food in or taking food out.
  - The shorter time for which the door is open, the less ice will form in the freezer.
  - Clean the rear of the refrigerator regularly. Dust increases energy consumption.
  - Do not set temperature colder than necessary.
  - Ensure sufficient air exhaust at the refrigerator base and at the back wall of the refrigerator. Do not cover air vent openings.
  - Allow clearance to the right, left, back and top when installing. This will help reduce power consumption and keep your energy bills lower.

This appliance is intended to be used in household and similar applications such as

- staff kitchen areas in shops, offices and other working environments;
- farm houses and by clients in hotels, motels and other residential type environments;
- bed and breakfast type environments;
- catering and similar non-retail applications.

Safety information

Severe warning signs for transportation and site

⚠ WARNING

- When transporting and installing the appliance, care should be taken to ensure that no parts of the refrigerating circuit are damaged.
  - Refrigerant leaking from the pipe work could ignite or cause an eye injury. If a leak is detected, avoid any naked flames or potential sources of ignition and air the room in which the appliance is standing for several minutes.
  - This appliance contains a small amount of isobutane refrigerant (R-600a), a natural gas with high environmental compatibility that is, however, also combustible. When transporting and installing the appliance, care should be taken to ensure that no parts of the refrigerating circuit are damaged.
- When transporting and installing the refrigerator, do not touch the water hose on the back side of the refrigerator.
  - This may damage the refrigerator and as a result the water dispenser can not be used.

Critical installation warnings

⚠ WARNING

- Do not install the refrigerator in a damp location or place where it may come in contact with water.
  - Deteriorated insulation on electrical parts may cause an electric shock or fire.
- Do not place this refrigerator in direct sunlight or expose it to the heat from stoves, room heaters, or other appliances.
- Do not plug several appliances into the same multiple power strip. The refrigerator should always be plugged into its own individual electrical outlet which has a voltage rating that matches the voltage listed on the refrigerator's rating plate.
  - This provides the best performance and also prevents overloading of house wiring circuits, which could cause a fire hazard from overheated wires.
- If the wall socket is loose, do not insert the power plug.
  - There is a risk of electric shock of fire.
- Do not use a power cord that has cracks or abrasion damage along its length or at either end.
- Do not bend the power cord excessively or place heavy objects on it.
- Do not pull or excessively bend the power cord.
- Do not twist or tie the power cord.
- Do not hook the power cord over a metal object, place a heavy object on the power cord, insert the power cord between objects, or push the power cord into the space behind the appliance.
- When moving the refrigerator, be careful not to roll over or damage the power cord.
  - This may result in an electric shock or fire.

- Never unplug your refrigerator by pulling on the power cord. Always grip the plug firmly and pull straight out from the outlet.
  - Damage to the cord may cause a short-circuit, fire, and/or electric shock.
- Do not use aerosols near the refrigerator.
  - Using aerosols near the refrigerator may cause an explosion or fire.
- Do not install this appliance near a heater or inflammable material.
- Do not install this appliance in a location where gas may leak.
  - This may result in an electric shock or fire.
- This refrigerator must be properly located and installed in accordance with the instructions in this manual before you use it.
- Connect the power plug in the proper position with the cord hanging down.
  - If you connect the power plug upside down, the wire can get cut off and cause a fire or electric shock.
- Make sure that the power plug is not crushed or damaged by the back of the refrigerator.
- Keep the packing materials out of reach of children.
  - There is a risk of death from suffocation if a child puts the packing materials on his or her head.
- Do not install this appliance in a humid, oily or dusty location, in a location exposed to direct sunlight and water (rain drops).
  - Deteriorated insulation of electrical parts may cause an electric shock or fire.
- If any dust or water is in the refrigerator, pull out power plug and contact your Samsung Electronics service center.
  - Otherwise there is a risk of fire.
- Do not stand on top of the appliance or place objects (such as laundry, lighted candles, lighted cigarettes, dishes, chemicals, metal objects, etc.) on the appliance.
  - This may result in an electric shock, fire, problems with the product, or injury.
- You need to remove all the protective plastic film before you initially plug the product in.
- Children should be supervised to ensure that they do not play with the snap rings used for door adjustment or the water tube clips.
  - There is risk of death by suffocation if a child swallows a snap ring or water tube clip. Keep the snap rings and water tube clips out of children's reach.
- The refrigerator must be safely grounded.
  - Always make sure that you have grounded the refrigerator before attempting to investigate or repair any part of the appliance. Power leakages can cause severe electric shock.
- Never use gas pipes, telephone lines, or other potential lightning attractors as an electrical ground.
  - You must ground the refrigerator to prevent any power leakages or electric shocks caused by current leakage from the refrigerator.
  - This may result in an electric shock, fire, explosion, or problems with the product.
- Plug the power plug into the wall socket firmly. Do not use a damaged power plug, damaged power cord, or loose wall socket.
  - This may result in an electric shock or fire.
- The fuse on the refrigerator must be changed by a qualified technician or service company.
  - Failing to do so may result in an electric shock or personal injury.

Safety information

Installation cautions

⚠ CAUTION

- Allow sufficient space around the refrigerator and install it on a flat surface.
  - If your refrigerator is not level, cooling efficiency and durability can be declined.
- Allow the appliance to stand for 2-3 hours before loading foods after installation and turning on.
- We strongly recommend you have a qualified technician or service company install the refrigerator.
  - Failing to do so may result in an electric shock, fire, explosion, problems with the product, or injury.

Critical usage warnings

⚠ WARNING

- Do not insert the power plug into a wall socket with wet hands.
  - This may result in an electric shock.
- Do not store articles on the top of the appliance.
  - When you open or close the door, the articles may fall and cause personal injury and/or material damage.
- Do not insert hands, feet or metal objects (such as chopsticks, etc.) into the bottom or the back of the refrigerator.
  - This may result in an electric shock or injury.
  - Any sharp edges may cause a personal injury.
- Do not touch the inside walls of the freezer or products stored in the freezer with wet hands.
  - This may cause frostbite.
- Do not put a container filled with water on the refrigerator.
  - If spilled, there is a risk of fire or electric shock.
- Do not keep volatile or flammable objects or substances (benzene, thinner, propane gas, alcohol, ether, LP gas, and other such products) in the refrigerator.
  - This refrigerator is for storing food only.
  - This may result in fire or explosion.
- Children should be supervised to ensure that they do not play with the appliance.
  - Keep fingers out of “pinch point” areas. Clearances between the doors and cabinet are necessarily small. Be careful when you open the doors if children are in the area.
- Do not put your fingers or children's fingers between the doors.
  - Keep fingers out of the left and right door gaps. Be careful when you open the doors if your fingers are in between the doors.
- Do not let children hang on the door or door bins. A serious injury may occur.
- Do not let children go inside the refrigerator. They could become trapped.
- Do not insert your hands into the bottom area under the appliance.
  - Any sharp edges may cause personal injury.

- Do not store pharmaceutical products, scientific materials, or temperature sensitive products in the refrigerator.
  - Products that require strict temperature controls must not be stored in the refrigerator.
- If you smell pharmaceutical or smoke, pull out power plug immediately and contact your Samsung Electronics service center.
- If any dust or water is in Refrigerator, pull out power plug and contact your Samsung Electronics service center.
  - Otherwise there is a risk of fire.
- Do not let children step on a drawer.
  - The drawer may break and cause them to slip.
- Do not leave the doors of the refrigerator open while the refrigerator is unattended and do not let children enter inside the refrigerator.
- Do not allow babies or children go inside the drawer.
  - It can cause death from suffocation by entrapment or personal injury.
- Do not overfill the refrigerator with food.
  - When you open the door, an item may fall out and cause personal injury or material damage.
- Do not spray volatile material such as insecticide onto the surface of the appliance.
  - As well as being harmful to humans, it may also result in an electric shock, fire, or problems with the product.
- Never put fingers or other objects into the water dispenser hole, ice chute and ice maker bucket.
  - It may cause a personal injury or material damage.
- Do not use or place any substances sensitive to temperature such as flammable sprays, flammable objects, dry ice, medicine, or chemicals near or inside of the refrigerator.
- Do not use a hair dryer to dry the inside of the refrigerator. Do not place a lighted candle in the refrigerator for removing bad odours.
  - This may result in an electric shock or fire.
- Fill the water tank, ice tray and water cubes only with potable water (mineral water or purified water).
  - Do not fill the tank with tea, juice or sports drink, this may damage the refrigerator.
- Do not stand on top of the appliance or place objects (such as laundry, lighted candles, lighted cigarettes, dishes, chemicals, metal objects, etc.) on the appliance. This may result in an electric shock, fire, problems with the product, or injury. Do not put a container filled with water on the appliance.
  - If spilled, there is a risk of fire or electric shock.
- Never stare directly at the UV LED lamp for long periods of time.
  - This may result in eye strain due to the ultraviolet rays.
- Do not put shelf in upside down. Shelf stopper could not work.
  - It may cause a personal injury because of glass shelf drop.
- If a gas leak is detected, avoid any naked flames or potential sources of ignition, and air the room in which the appliance is standing for several minutes.
  - Do not touch the appliance or power cord.
  - Do not use a ventilating fan.
  - A spark may result in explosion or fire.
- Bottles should be stored tightly together so that they do not fall out.
- This product is intended only for the storage of food in a domestic environment.

Safety information

- Do not attempt to repair, disassemble, or modify the refrigerator yourself.
- Do not use any fuse (such as cooper, steel wire, etc.) other than a standard fuse.
- If your refrigerator needs to be repaired or reinstalled, contact your nearest service center.
  - Failing to do so may result in an electric shock, fire, problems with the product, or injury.
- If the refrigerator emits a burning smell or smoke, unplug the refrigerator immediately and contact your Samsung Electronics service center.
  - Failing to do so may result in an electric or fire hazards.
- Pull the power plug out of the socket before changing the interior lamps of the refrigerator.
  - Otherwise, there is a risk of electric shock.
- If you experience difficulty changing a non-LED light, contact a Samsung service center.
- Plug the power plug into the wall socket firmly.
- Do not use a damaged power plug, damaged power cord or loose wall socket.
  - This may result in an electric shock or fire.

Usage cautions

⚠ CAUTION

- Do not refreeze thawed food.
  - Frozen and thawed food will develop harmful bacteria faster than fresh.
  - The second thaw will break down even more cells, leaching out moisture and changing the integrity of the product.
- Do not thaw meat at room temperature.
  - Safety will depend on whether the raw product was handled properly.
- Do not place glass bottles or carbonated beverages into the freezer.
  - The container may freeze and break, and this may result in injury.
- Use only the ice maker provided with the refrigerator.
- If you will be away from home for a long period of time (on vacation, for example) and won't be using the water or ice dispensers, close the water valve.
  - Otherwise, water leakage may occur.
- If you won't be using the refrigerator for a very long period of time, (3 weeks or more) empty the refrigerator including the ice bucket, unplug it, close the water valve, wipe excess moisture from the inside walls, and leave the doors open to prevent odors and mold.
- To get the best performance from the product:
  - Do not place food too close to the vents at the rear of the refrigerator as this can obstruct free air circulation in the refrigerator compartment.
  - Wrap food up properly or place it in airtight containers before putting it into the refrigerator.
  - Please observe maximum storage times and expiration dates of frozen goods.

- There is no need to disconnect the refrigerator from the power supply if you will be away for less than three weeks. However, if you will be away for more than three weeks, remove all the food and ice in the ice bucket, unplug the refrigerator, close the water valve, wipe excess moisture from the inside walls, and leave the doors open to prevent odors and mold.

- Service Warranty and Modification.
  - Any changes or modifications performed by a 3rd party on this finished appliance are not covered under Samsung warranty service, nor is Samsung responsible for safety issues that result from 3rd party modifications.
- Do not block the air vents inside the refrigerator.
  - If the air vents are blocked, especially with a plastic bag, the refrigerator can be over cooled. If a cooling period lasts too long, the water filter may break and cause water leakage.
- Use only the ice-maker provided with the refrigerator.
- Wipe excess moisture from the inside and leave the doors open.
  - Otherwise, odor and mold may develop.
- If the refrigerator is disconnected from the power supply, you should wait for at least five minutes before plugging it back in.
- When the refrigerator got wet by water, pull out the power plug and contact your Samsung Electronics service center.
- Do not strike or apply excessive force to any glass surface.
  - Broken glass may result in a personal injury and/or property damage.
- Fill the water tank and ice cube trays with potable water only (tap water, mineral water, or purified water).
  - Do not fill the tank with tea or a sports drink. This may damage the refrigerator.
- Be careful that your fingers are not caught in.
- If the refrigerator is flooded, make sure to contact your nearest service center.
  - There is a risk of electric shock or fire.
- Do not keep vegetable oil in your refrigerator's door bins. The oil can solidify, making it foul-tasting and difficult to use. In addition, the open container can leak and the leaked oil can cause the door bin to crack. After opening an oil container, it is best to keep the container in a cool and shaded place such as a cupboard or pantry.
  - Examples of vegetable oil: olive oil, corn oil, grape-seed oil, etc.

Safety information

Cleaning cautions

⚠ CAUTION

- Do not spray water directly on the inside or outside the refrigerator.
  - There is a risk of fire or electric shock.
- Do not use a hair dryer to dry the inside of the refrigerator.
- Do not place a lighted candle in the refrigerator to remove bad odors.
  - This may result in an electric shock or fire.
- Do not spray cleaning products directly on the display.
  - Printed letters on the display may come off.
- If any foreign substance such as water has entered the appliance, unplug the power plug and contact your nearest service center.
  - Failing to do so may result in an electric shock or fire.
- Use a clean, dry cloth to remove any foreign matter or dust from the power plug blades. Do not use a wet or damp cloth when cleaning the plug.
  - Otherwise, there is a risk of fire or electric shock.
- Do not clean the appliance by spraying water directly onto it.
- Do not use benzene, thinner, or Clorox, Chloride for cleaning.
  - They may damage the surface of the appliance and may cause a fire.
- Never put fingers or other objects into the dispenser hole.
  - It may cause a personal injury or material damage.
- Before cleaning or performing maintenance, unplug the appliance from the wall socket.
  - Failing to do so may result in an electric shock or fire.
- Use a clean sponge or soft cloth and a mild detergent in warm water to clean the refrigerator.
- Do not use abrasive or harsh cleansers such as window sprays, scouring cleansers, flammable fluids, muriatic acid, cleaning waxes, concentrated detergents, bleaches, or cleansers containing petroleum products on exterior surfaces (doors and cabinet), plastic parts, door and interior liners, and gaskets.
  - These can scratch or damage the material.
- Do not clean glass shelves or covers with warm water when they are cold. Glass shelves and covers may break if exposed to sudden temperature changes or impacts such as bumping or dropping.

Critical disposal warnings

⚠ WARNING

- Please dispose of the packaging material from this product in an environmentally friendly manner.
- Ensure that none of the pipes on the back of the refrigerator are damaged prior to disposal.
- When disposing of this refrigerator, remove the door/door seals and door latch so that small children or animals cannot become trapped inside. Children should be supervised to ensure that they do not play with the appliance. If trapped inside, a child may get hurt or suffocate to death.
  - If trapped inside, the child may become injury and suffocate to death.
- Cyclopentane is used in the insulation. The gases in the insulation material require a special disposal procedure. Please contact your local authorities in regard to the environmentally safe disposal of this product.
- Keep all packaging materials well out of the reach of children, as packaging materials can be dangerous to children.
  - If a child places a bag over his or her head, the child could suffocate.

Safety information

Additional tips for proper usage

- In the event of a power failure, call the local office of your electric company and ask how long the failure is going to last.
  - Most power failures that are corrected in an hour or two will not affect your refrigerator temperatures. However, you should minimize the number of door openings while the power is off.
  - Should the power failure last more than 24 hours, remove and discard all frozen food.
- The refrigerator might not operate consistently (frozen contents can thaw or temperatures can become too warm in the frozen food compartment) if sited for an extended period of time in a location where ambient air temperatures are constantly below the temperatures for which the appliance is designed.
- In case of particular foods, keeping it under refrigeration can have a bad effect on preservation due to its properties.
- Your appliance is frost free, which means there is no need to manually defrost your appliance. This will be carried out automatically.
- Temperature rise during defrosting complies with ISO requirements. If you want to prevent an undue rise in the temperature of frozen food while the appliance defrosts, wrap the frozen food in several layers of newspaper.
- Do not re-freeze frozen foods that have thawed completely.
- The temperature of two star section (sections) or compartment (compartments) which have two star symbol (**) is slightly higher than other freezer compartment (compartments).
  The two star section (sections) or compartment (compartments) is (are) based on the instruction and/or the condition as delivered.

Instructions about the WEEE



Correct Disposal of This Product (Waste Electrical & Electronic Equipment) (Applicable in countries with separate collection systems)

This marking on the product, accessories or literature indicates that the product and its electronic accessories (e.g. charger, headset, USB cable) should not be disposed of with other household waste at the end of their working life. To prevent possible harm to the environment or human health from uncontrolled waste disposal, please separate these items from other types of waste and recycle them responsibly to promote the sustainable reuse of material resources.

Household users should contact either the retailer where they purchased this product, or their local government office, for details of where and how they can take these items for environmentally safe recycling.

Business users should contact their supplier and check the terms and conditions of the purchase contract. This product and its electronic accessories should not be mixed with other commercial wastes for disposal.

For information on Samsung's environmental commitments and product regulatory obligations, e.g. REACH, WEEE or Batteries, visit our sustainability page available via www.samsung.com

(For products sold in European countries and in the UK only)

Installation

Follow these instructions carefully to ensure a proper installation of this refrigerator and to prevent accidents before using it.

⚠ WARNING

- Use the refrigerator only for its intended purpose as described in this manual.
- Any servicing must be performed by a qualified technician.
- Dispose of the product packaging material in compliance with the local regulations.
- To prevent electric shock, unplug the power cord before servicing or replacements.

Refrigerator at a glance

The actual appearance of your refrigerator may differ, depending on the model and the country.

Type A

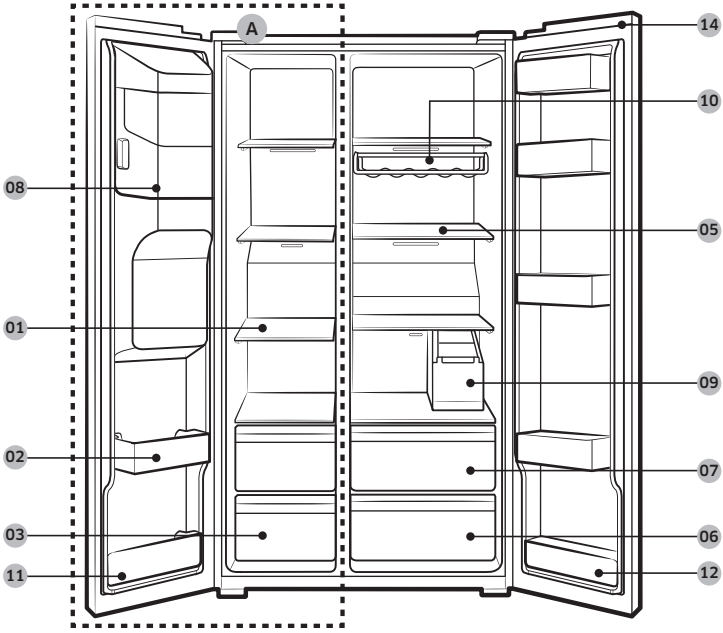

Installation

Type B

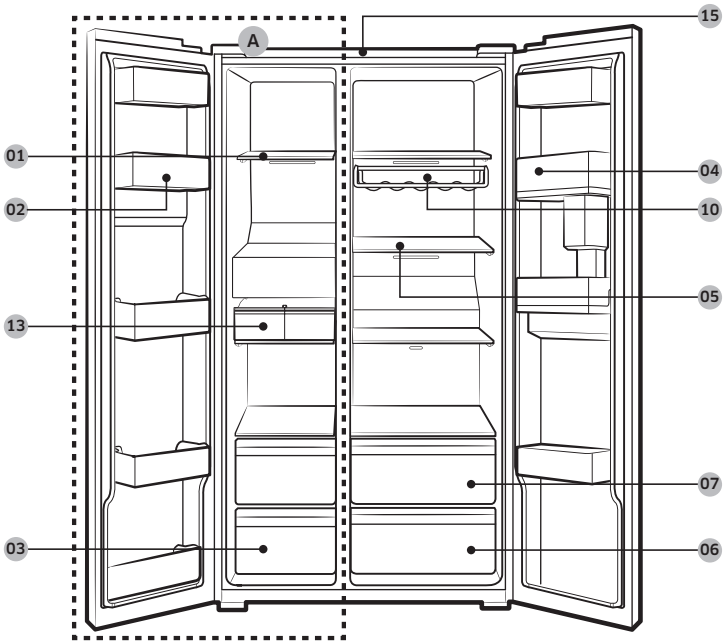

01 Freezer shelves
02 Multipurpose freezer bin
03 Dried food and meat storage drawer
04 Fridge bin
05 Fridge shelves
06 Vegetable drawer
07 Multipurpose drawer
08 Ice maker bucket **
09 Water tank *
10 Wine rack *
11 Lower freezer bin
12 Lower fridge bin *
13 Auto Ice Maker *
14 Switch Cover *
15 Mesh filter *

A. Freezer
* Applicable models only
** Dispenser models only

NOTE

The design of the egg container may differ with the model.

⚠ CAUTION

For normal models, do not change the position of the freezer shelves. Freezer shelves have different lengths, and if you change the position, you may damage the product when closing the door.

Step-by-step installation

STEP 1 Select a site

Site requirements:

- Solid, level surface without carpeting or flooring that may obstruct ventilation
- Away from direct sunlight
- Adequate room for opening and closing the door
- Away from a heat source
- Room for maintenance and servicing

Installation

Clearance

See the pictures and table below for space requirements for installation.

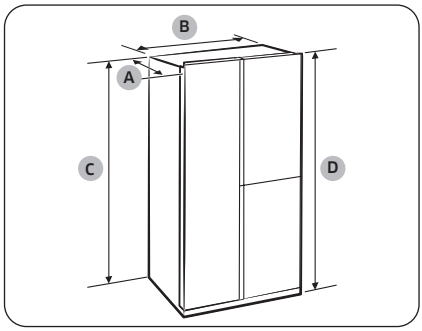

Depth “A”	726
Width “B”	912
Height “C”	1746
Overall Height “D”	1784

(unit: mm)

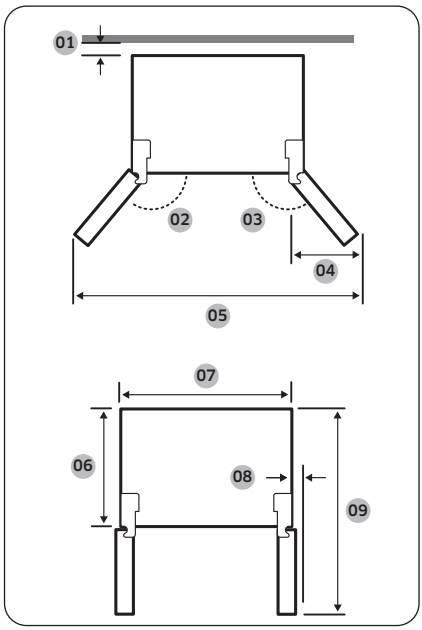

01	more than 50 mm recommended
02	165°
03	170°
04	564 mm
05	1730 mm
06	620 mm
07	912 mm
08	30 mm (without handle)
09	1175 mm

NOTE

The measurements in the above table may differ, depending on the measuring method.

STEP 2 Spacing (applicable models only)

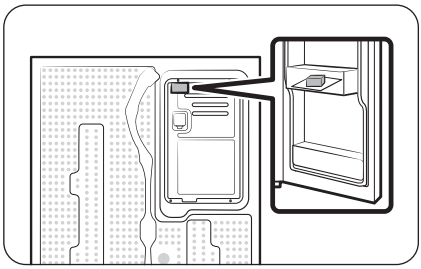

1. Open the door and locate the provided spacer.
2. Unpack the spacer and attach it to the rear of the refrigerator as shown. It helps ventilate air to the rear wall and save power consumption.

STEP 3 Flooring

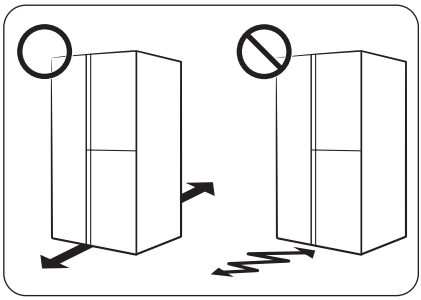

- The surface to install the refrigerator must support a fully loaded refrigerator.
- To protect the floor, put a large piece of cardboard on each leg of the refrigerator.
- Once the refrigerator is in its final position, do not move it unless necessary to protect the floor. If you have to, use a thick paper or cloth such as old carpets along the movement path.

NOTE

If the refrigerator cannot pass through the entrance due to its size, see the **Door removal for entrance** section in the Installation chapter.

Installation

STEP 4 Adjust the levelling feet

Adjusting the front height

⚠ CAUTION

- The refrigerator must be levelled on a flat, solid floor. Failing to do so can cause damage to the refrigerator or physical injury.
- Levelling must be performed with an empty refrigerator. Make sure no food items remain inside the refrigerator.
- For safety reasons, adjust the front side a little higher than the rear side.

The refrigerator can be levelled using the front legs that have a special screw (leveller) for levelling purposes. Use a flat-head screwdriver for levelling.

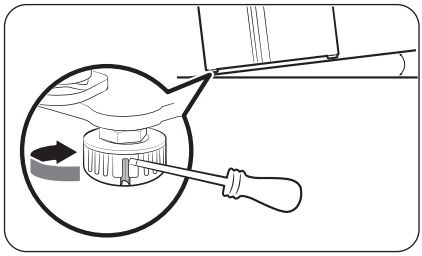

To adjust the height of the freezer side:
Insert a flat-head screwdriver into the leveller of the freezer-side front leg. Turn the leveller clockwise to raise, or turn it counter clockwise to lower.

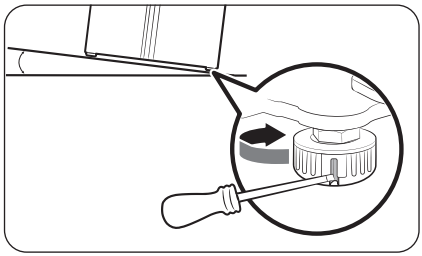

To adjust the height of the fridge side:
Insert a flat-head screwdriver into the leveller of the fridge-side front leg. Turn the leveller clockwise to raise, or turn it counter clockwise to lower.

Adjusting the rear side height (applicable models only)

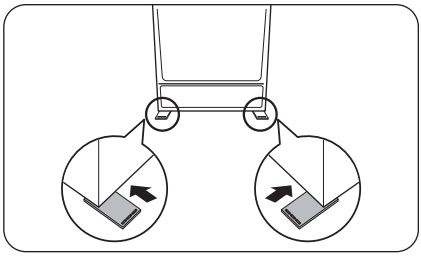

If you need to raise the rear side of the refrigerator to level it, you can use the provided level adjustment pad(s). Follow these instructions to raise the rear side of the refrigerator.

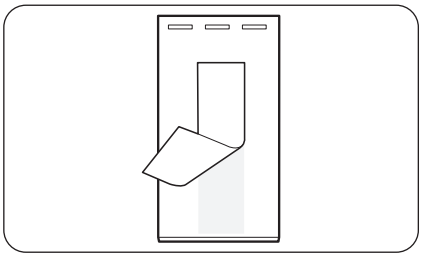

1. Choose the position on the floor where you need to attach the level adjustment pad.
2. Peel the double-sided tape on the bottom of the level adjustment pad.

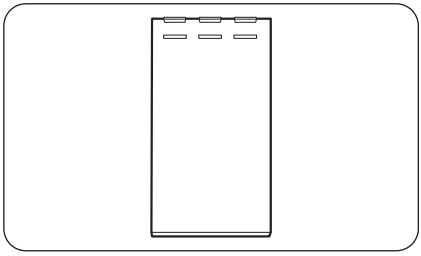

3. Attach the level adjustment pad to the floor.

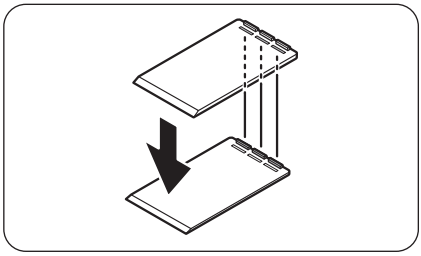

4. If you need to further raise the rear height, attach another adjustment pad on top of the first level adjustment pad.

NOTE

- You may skip this step if you can level the refrigerator using a single attachment pad.
- Make sure the ribs on the first adjustment pad are inserted into the grooves of the second level adjustment pad.

Installation

STEP 5 Adjust the door height as well as the door gap

To adjust the height of a door

The height of a door can be adjusted using the clamp nut and the height nut on the front bottom of each door.

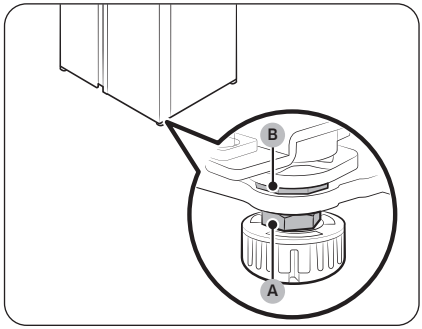

1. Open the door to adjust, and locate the two nuts (A) and (B) on the front bottom of the door.

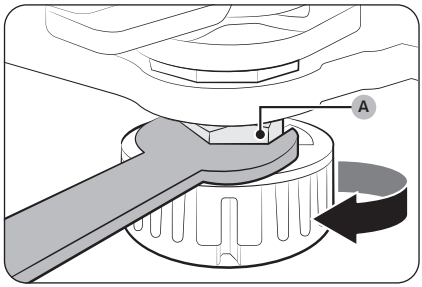

2. With a 19 mm spanner (provided), turn the clamp nut (A) clockwise to loosen. Then, open the door, and do the following inside the door.
   - To raise the door, turn the height nut (B) counter clockwise.
   - To lower the door, turn the height nut (B) clockwise.

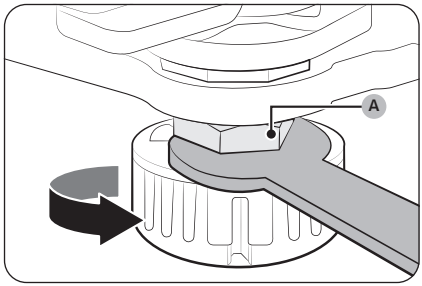

3. When complete, tighten the clamp nut (A) by turning it counter clockwise.

STEP 6 Connect the water dispenser line (applicable models only)

Parts and tools required

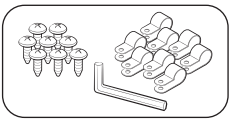

Water line fixer and screws

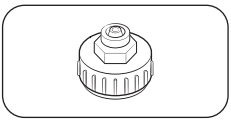

Coupler (24 mm)

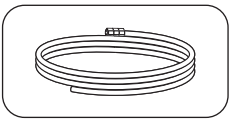

Water line

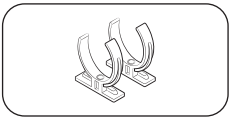

Water filter lock-clip

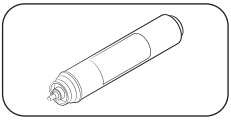

Water filter

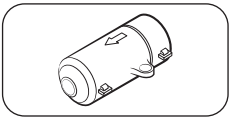

Check valve

Installation (external dispenser line)

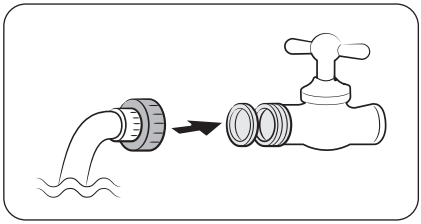

1. Assemble the water pipe line using couplers.
2. Close the main water supply, and then close the water tap.
3. Connect the coupler to the cold water tap.

⚠ CAUTION

- Make sure you connect the coupler to the cold water tap. Connection to the hot water tap may cause the water filter to be clogged and fail to operate normally.
- The warranty for your refrigerator does not cover the water line installation. The water line installation will be performed at your own costs unless the installation fee is included in the retailer's price.
- Samsung takes no responsibility for the water line installation. If water leaks occur, contact the installer of the water line.
- The water line must be repaired by a qualified professional. If you encounter a water leak, contact a local Samsung service centre or the installer of the water line.

Installation

STEP 7 Connect to a water source (applicable models only)

⚠ CAUTION

- The water line must be connected by a qualified technician.
- The warranty for your refrigerator does not cover the water line installation. The water line installation will be performed at your own costs unless the installation fee is included in the retailer's price.
- Samsung takes no responsibility for the water line installation. If water leaks occur, contact the installer of the water line.

To connect the cold water pipe to the water filtering hose

⚠ CAUTION

- Make sure the water filtering hose is connected to a cold, potable water source pipe. Connecting to the hot water pipe may cause the water filter to malfunction.

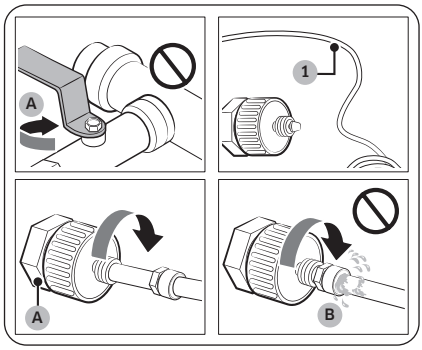

A. Close Main Water pipe
B. No gap

1. Shut off the water supply by closing the main water valve.
2. Locate the cold, potable water pipe (1).
3. Follow the Water Line Installation to connect to the water pipe.

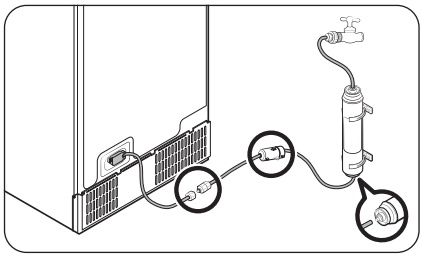

NOTE

New hose-sets supplied with the appliance are to be used and old hose-sets should not be reused.

To connect the water filtering hose to the water line

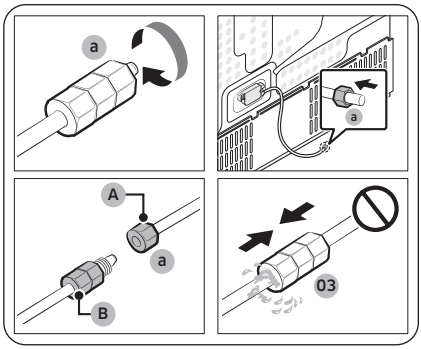

A. Water Line from unit
B. Water Line from Kit

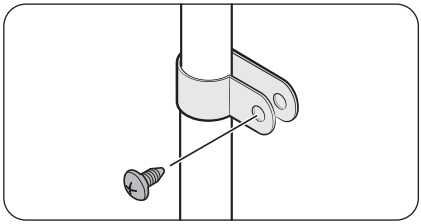

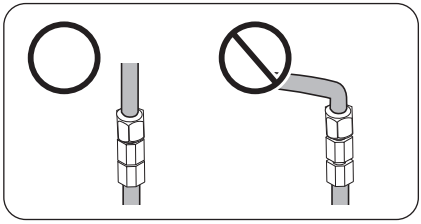

1. Loosen and remove the compression nut (a) from the water line of the refrigerator, and insert it to the water filtering hose.
2. Tighten up the compression nut (a) to connect the water filtering hose and the water line.
3. Open the main water valve and check for any leaks.
4. If there are no leaks, dispense about 10 litres of water or dispense the water for 6 - 7 minutes before actually using the refrigerator to remove impurities inside the water filtering system.

5. Secure the water line to a sink or a wall using a clip.

⚠ CAUTION

- Do not tighten the water line excessively. Make sure the water line is not bent, pinched, or squashed.
- Do not mount the water line on any part of the refrigerator. This may damage the refrigerator.

NOTE

If you have to relocate the refrigerator after connecting the water line, make sure the joined section of the water line must is straight.

Installation

To repair the water line

⚠ CAUTION

The water line must be repaired by a qualified professional. If you encounter a water leak, contact a local Samsung service centre or the installer of the water line.

Reverse osmosis water filtration system

The water pressure of the water supply system to a reverse osmosis water filtration system must be between 241 kPa and 827 kPa.

The water pressure of the reverse osmosis water filtration system to the refrigerator's cold water line must be at least 276 kPa. If the water pressure is below the specified:

- Check if the sediment filter in the reverse osmosis system is blocked. Replace the filter if necessary.
- Refill the water tank in the reverse osmosis system with water.
- If your refrigerator has a water filter, it may further reduce the water pressure when used in conjunction with a reverse osmosis system. Remove the water filter.

For more information or servicing, contact a licensed plumbing professional.

NOTE

WATER FILTER MUST BE INSTALLED.

- Make sure to install a water filter.
- Failing to install a water filter may allow fine foreign materials (sand, lime) in the water to continuously enter the water supply line and possible cause defects in the water supply system.

Ordering a new filter

To purchase a new water filter (part type: **HAFEX/EXP**), contact a local Samsung service centre.

To mount the water filter into place

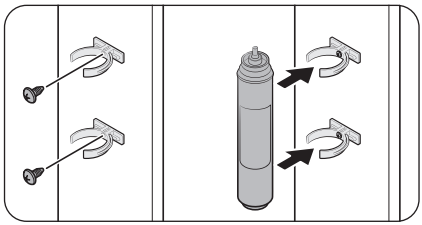

1. Attach the **lock clips** (x2) to appropriate positions under the sink, for instance. Then, fix the **lock clips** firmly using screws.
2. Insert the **water filter** into the upper and lower clips in the correct direction. Make sure to check the vertical direction of the **water filter**.

NOTE

If the filter is installed horizontally, water may remain in the filter. Therefore, vertical installation is recommended.

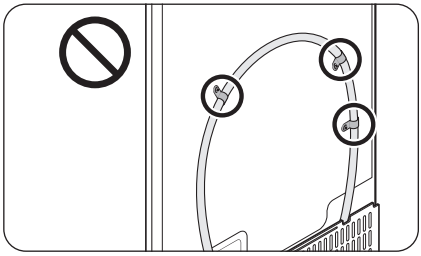

⚠ CAUTION

Do not mount the water filter on any part of the refrigerator. This may damage the refrigerator.

Water filter replacement (applicable models only)

⚠ CAUTION

- Do not use third-party water filters. Use only Samsung-provided or -approved filters.
- Unapproved filters may leak and damage the refrigerator, causing electric shock. Samsung holds no responsibility for any damage that may occur from use of third party water filters.
- The water filter replacement icon ( ) blinks to let you know it is time to replace the water filter.

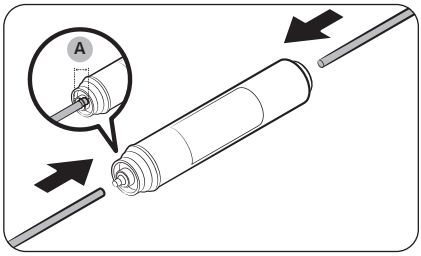

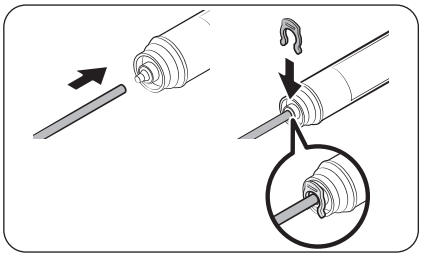

1. Shut off the main water supply.
2. Connect the water supply line to the inlet side of the filter to the end.
3. Connect the dispenser line to the outlet side of the filter. The **water hose insertion depth (A)** is 18 mm.
4. Check if there is any leak. If not, fix the lines with the clips.
5. Put the water filter into place and fix it with the clips.
6. Reset the water filter replacement alarm. (For detailed instructions, see the "**Resetting or dismissing the water filter replacement alarm (applicable models only)**" section on page **45**.)
7. When replacing is complete, flush 10 litres of water (or dispense the water for 6 - 7 minutes) to remove impurities from the water line.

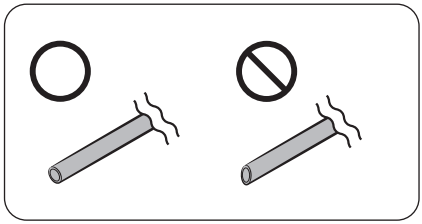

⚠ CAUTION

When adjusting the length of the water line tubing, make sure to smooth out the cut surface at a right angle. This is to prevent a water leak.

NOTE

- A newly installed filter may cause the water dispenser to spurt water briefly. This is because air has entered the water line.
- This replacement process may involve the refrigerator to drip water onto the floor. If this happens, wipe up with dry cloths.

STEP 8 Initial settings

By completing the following steps, the refrigerator should be fully functioning.

1. Plug the power cord into the wall socket to turn the refrigerator on.
2. Open the door, and check if the interior light lights up.
3. Set the temperature to the coldest, and wait for about an hour. Then, the freezer will be slightly chilled, and the motor will run smoothly.
4. Wait until the refrigerator reaches the set temperature. Now the refrigerator is ready for use.

STEP 9 Final check

When installation is complete, confirm that:

- The refrigerator is plugged into an electrical outlet and grounded properly.
- The refrigerator is installed on a flat, level surface with a reasonable clearance from the wall or the cabinet.
- The refrigerator is level and is sitting firmly on the floor.
- The door opens and closes freely, and the interior light turns on automatically when you open the door.

Door removal for entrance

If the refrigerator cannot pass through the entrance due to its size, follow these instructions:

Tools required (not provided)

These tools are used for removing the doors.

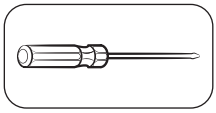

Phillips screwdriver

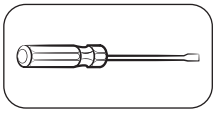

Flat-head screwdriver

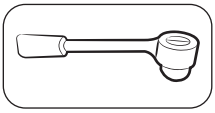

Socket spanner (10 mm)

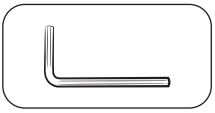

Allen spanner (5 mm)

Disconnect the water line

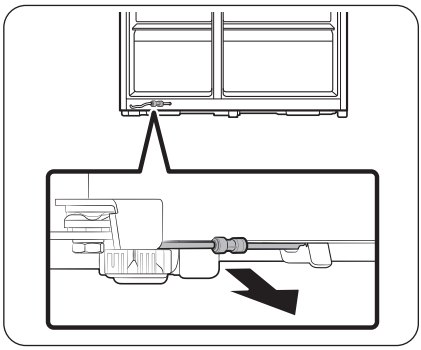

1. From the bottom rear side of the refrigerator, pull out the water line to the front.

NOTE

The refrigerator's water line is a water circulation line that connects between the water pipe from the water source and the hoses from the water filtering system of the refrigerator.

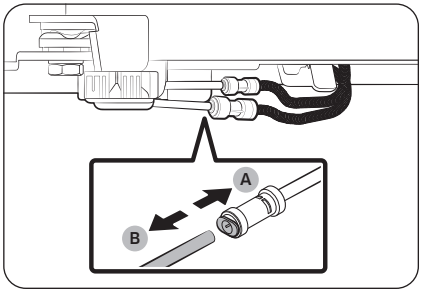

2. To disconnect the hoses, press and hold the collet (A) and detach the water hose (B).

⚠ CAUTION

Do not apply excessive force to the coupler. It may break.

Installation

Detach the doors

⚠ CAUTION

The door may fall off or over and damage itself during any of these steps. To prevent an accident, use extreme caution when performing these steps.

Type A models

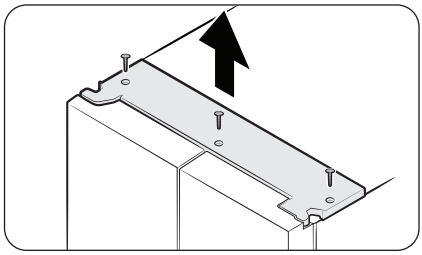

Type B models

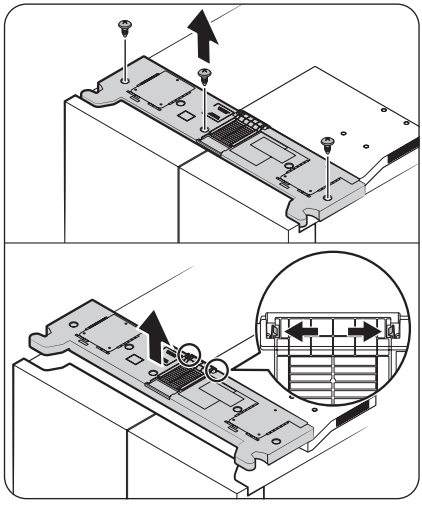

1. With the doors closed, detach the top cover.
   The detaching method varies depending on the top cover type.
   - Type A: Use a Phillips screwdriver to remove the screws, then lift the top cover to detach it.
   - Type B: Use a Phillips screwdriver to remove the screws, push the locking tabs outward to release the top cover from the duct cover, then lift the top cover to detach it.

NOTE

The number of screws may differ depending on the model.

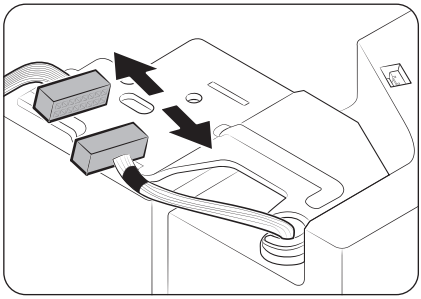

2. Disconnect the electrical harness.

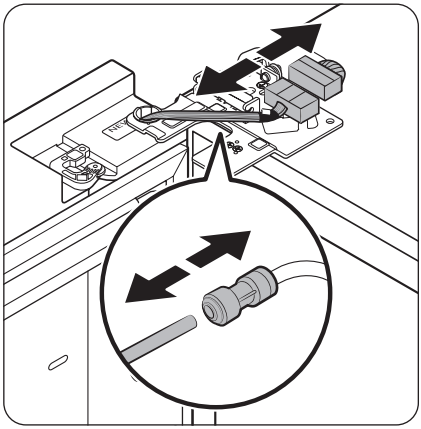

3. Disconnect the two wire connectors on the left door. The position of the connectors differs with the model.

⚠ CAUTION

- Do not remove both doors simultaneously. Make sure to remove one door at a time. Otherwise, any of the doors may fall and cause physical injury.
- Make sure the refrigerator is off before disconnecting the connectors.

4. Disconnect the water tube from the coupler on the left door as shown.
   - This step does not apply to the models without the AutoFill pitcher and the water dispenser.

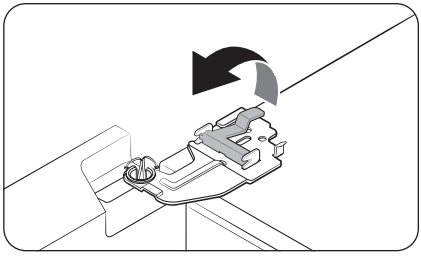

5. Gently lift the clamp.

NOTE

To prevent damage to the clamp or injuries, do not lift the clamp forcefully.

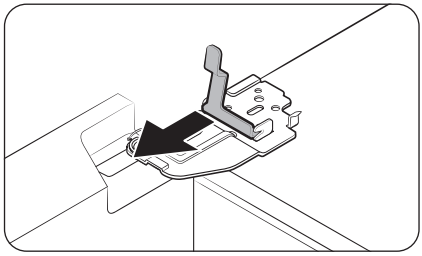

6. Pull the clamp to remove.

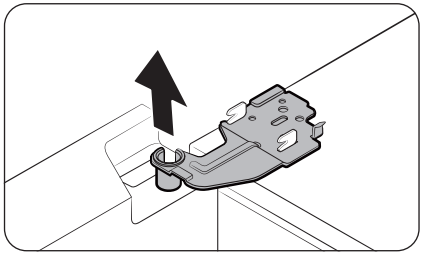

7. Open the door by 90 degrees. While holding the door, remove the hinge.

⚠ CAUTION

If you remove the hinge without holding the door, the door may fall and cause injury.

To reattach the fridge door

After you have moved the refrigerator to its final location, reattach the doors by following the removal instructions in reverse order.

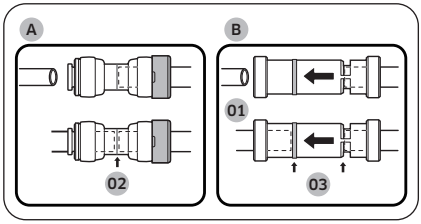

01 Dispenser
02 Center of transparent coupler
03 Guidelines

⚠ CAUTION

To prevent water leaks from the dispenser, the water line must be fully connected. Make sure both tubes of the water line are inserted fully to the center of transparent coupler (A) or the guidelines (B).

Installation

Reattach the doors

⚠ CAUTION

- Before reattaching the doors, make sure all the electrical connectors are properly connected.
- The freezer door must be reattached before the fridge door.
- Take care when removing the door to ensure that it does not fall on you.
- Be careful not to scratch.



1. Hold the freezer door and hook to the hinge at the bottom of the refrigerator.

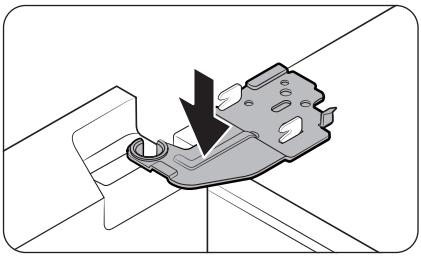

2. Put the hinge into its position, and then insert it into the hole on the door.

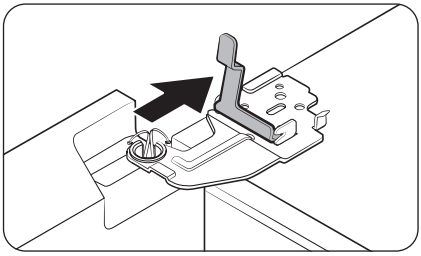

3. Insert the clamp in the arrow direction.

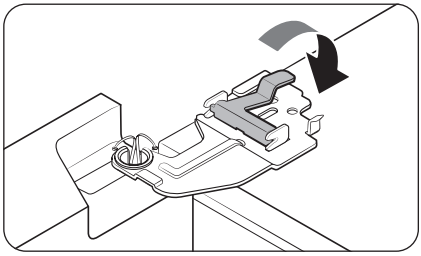

4. Press the clamp as shown.

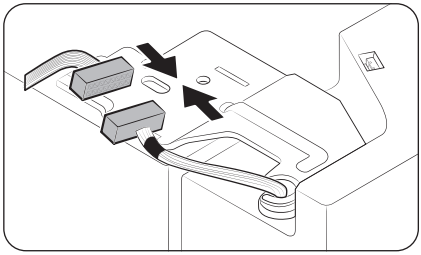

5. Connect the electrical harness.

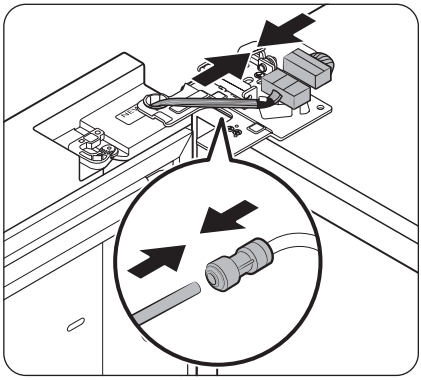

6. Connect the wire connectors.

⚠ CAUTION

- Make sure the wire connectors are connected properly. Otherwise, the display will not operate.

7. Connect the water tube.
   - This step does not apply to the models without the AutoFill pitcher and the water dispenser.

⚠ CAUTION

- To prevent water leaks, make sure the red clips tighten the coupler properly.
- Keep the clips out of children's reach.

Type A models

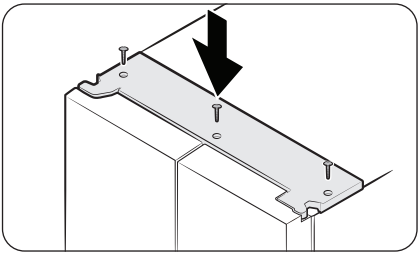

Type B models

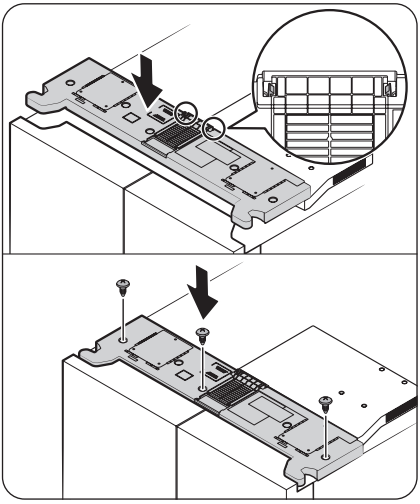

8. Attach the top cover with the front side first, and then press down on its back to get it into position. Then, tighten the screws.
   - For Type B models: Ensure that the locking tabs are fully engaged with the duct cover before tightening the screws.

NOTE

The number of screws may differ depending on the model.

Operations

Main panel

The actual appearance of your main panel may differ from the figure and the main panel design is subject to change without notice.

General type

Type A

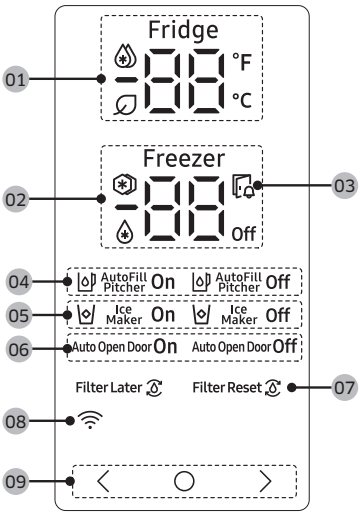

Type B

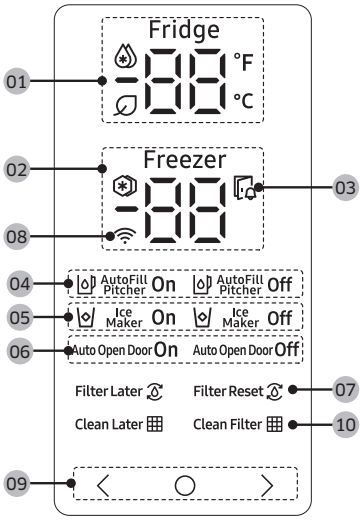

01 Fridge indicator	• Displays the current or desired temperature of the fridge. • ❄ indicates that the Power Cool function is on. • The 🍃 icon appears when the AI Energy Mode is operating. You may turn on or off the AI Energy Mode in the SmartThings app. (applicable models only)
02 Freezer indicator	• Displays the current or desired temperature of the freezer. • ❄ indicates that the Power Freeze function is on. • ❄ indicates that the freezer is operating in Fridge mode. (Applicable models only.) • **Off** indicates that the freezer is off. (Applicable models only.)
03 Door open indicator	This indicator blinks with an alarm if the door is left open for more than 2 minutes.

04 AutoFill Pitcher indicator (applicable models only)	The AutoFill Pitcher has 2 indicators (AutoFill Pitcher On / Off) to indicate its operating status. • When the AutoFill operates, the corresponding indicator (AutoFill Pitcher On) turns on. • When the AutoFill is turned off, the corresponding indicator (AutoFill Pitcher Off) turns on. • To enable AutoFill Pitcher, you must turn on the AutoFill Pitcher.
05 Ice Maker indicator	• Displays the status of the ice maker. • To enable ice making, you must turn on the ice maker.
06 Auto Open Door indicator (applicable models only)	• Displays the status of the Auto Open Door function. • To enable the Auto Open Door function, you must turn on the Auto Open Door function. (For more information, see the **Turning on or off the Auto Open Door function (applicable models only)** section on page **46**.)
07 Water Filter indicator (applicable models only)	• indicates that the water filter needs to be replaced. • When the icon blinks, you can replace the water filter and reset the water filter replace alarm, or dismiss the alarm and change the filter later. (For more information, see the "**Resetting or dismissing the water filter replacement alarm (applicable models only)**" section on page **45**.
08 Network connection indicator	• This icon indicates that the refrigerator is connected to a network. • You can control and monitor your refrigerator on the SmartThings app. For more information, see the **SmartThings (applicable models only)** section.
09 Buttons	• When the display is off, tap any button to wake up the display. • Use ○ to select the fridge or freezer and 〈 or 〉 to select the desired temperature or function for the selected compartment.
10 Mesh Filter Indicator (applicable models only)	• indicates that the mesh filter needs to be cleaned. • When the icon blinks, you can clean the mesh filter and reset the mesh filter clean alarm, or dismiss the alarm and clean the filter later. (For more information, see the **Resetting or dismissing the mesh filter clean alarm (applicable models only)** section on page **46**.) • For instructions on cleaning the mesh filter, see the **Mesh filter (applicable models only)** section on page **79**. • A notification to clean the mesh filter appears at least once a year, but the interval may vary depending on the season, region, or usage environment.

NOTE

- The control panel is designed to stay off when the refrigerator is not in use. It only becomes active and lights up when you open the door or tap the buttons.
- If the door is left open for 5 minutes, internal light will blink for 5 minutes and turn off. It is to alert deaf and hard of hearing users that a door is open. Note that this function is normal.

Setting the desired temperature or function

1. Tap any button (〈, ◯, or 〉) to wake up the display.
   - This step may not apply to some models.
2. Tap ◯ to select the fridge or freezer.
   - The selected compartment's indicator blinks.
   - The degrees Celsius symbol (℃) does not blink.
3. Tap 〈 or 〉 to select the desired temperature or function.
   - Refer to the table for available selection for each compartment.

Fridge	• Available selection: (Power Cool) ↔ 1 ℃ ↔ 2 ℃ ↔ 3 ℃ ↔ 4 ℃ ↔ 5 ℃ ↔ 6 ℃ ↔ 7 ℃ ↔ (Vacation) • Power Cool speeds up the cooling process at maximum fan speed. The fridge keeps running at full speed for two and a half hours and then returns to the previous temperature. • Use the Vacation function if you are going on vacation or a business trip, or if you do not intend to use the fridge for an extended time. The fridge temperature will be kept under 15 ℃, but the freezer remains active as previously set.

Freezer	• Available selection: (Power Freeze) ↔ -23 ℃ ↔ -22 ℃ ↔ -21 ℃ ↔ -20 ℃ ↔ -19 ℃ ↔ -18 ℃ ↔ -17 ℃ ↔ -16 ℃ ↔ -15 ℃ ↔ (Fridge) ↔ Off • Power Freeze speeds up the freezing process at maximum fan speed. The freezer keeps running at full speed for 50 hours and then returns to the previous temperature. To freeze large amounts of food, activate Power Freeze for at least 20 hours before putting food in the freezer. • If you select (Fridge), the freezer operates as a fridge, and the temperature setting changes to 3 ℃. • If you select **Off**, the freezer turns off. • Empty the ice bucket before you select (Fridge) or **Off**. After 15 seconds from you select (Fridge) or **Off**, the ice maker will begin to dispense any ice leftover into the ice bucket. • The (Fridge) and **Off** modes are not available in some models. **⚠ WARNING** • Do not put glass bottle containing liquid in the freezer while it is in the Fridge mode. When you unselect the Fridge mode, and the freezer returns to the freezer mode, the liquid in the glass bottles will freeze, which can cause the glass bottles to break or burst in the freezer. • Make sure to remove frozen foods from the freezer before you select the Fridge mode. Frozen foods will melt and spoil as the temperature increases. • Make sure to remove foods that you do not want to freeze before you unselect the Fridge mode and use the freezer to freeze. **NOTE** • When you use Power Freeze function the energy consumption of the refrigerator will increase. Remember to turn it off when you don't need it and return the freezer to your original temperature setting. • When the freezer is set to Off mode, the freezer temperature will be kept under 15 ℃, but the fridge remains active as previously set. • Do not store food or beverages in the refrigerator when the freezer is set to **Off**. • If you are going to use the freezer in the freeze mode, we strongly recommend that you use plastic containers to store food, especially vegetables.

4. Wait for 5 seconds to confirm your selection.
- The selected compartment's indicator stops blinking.

NOTE

Using Power Cool or Power Freeze increases power consumption.

Turning on or off the AutoFill Pitcher (applicable models only)

You can turn on or off the AutoFill Pitcher in fridge.

1. Tap any button (<, ◯, or >) to wake up the display.
   - This step may not apply to some models.
2. Tap ◯ until the AutoFill Pitcher indicator blinks.
3. Tap < or > to turn on or off the AutoFill Pitcher.
   - Tap < to turn it on.
   - Tap > to turn it off.
4. Wait for 5 seconds or tap ◯ to confirm your selection.
   - The AutoFill Pitcher indicator stops blinking.

Turning on or off the ice maker

You can turn on or off the auto ice maker in the freezer.

1. Tap any button (<, ◯, or >) to wake up the display.
   - This step may not apply to some models.
2. Tap ◯ until the Ice Maker indicator blinks.
3. Tap < or > to turn on or off the ice maker.
   - Tap < to turn it on.
   - Tap > to turn it off.
4. Wait for 5 seconds or tap ◯ to confirm your selection.
   - The Ice Maker indicator stops blinking.

Resetting or dismissing the water filter replacement alarm (applicable models only)

The water filter replacement icon () blinks to alert the user that it is time to replace the water filter. You can replace the water filter immediately and reset the water filter replacement alarm, or dismiss the alarm if you want to change the water filter later.

1. Tap any buttons (<, ◯, or >) to wake up the display.
   - This step may not apply to some models.
2. Tap ◯ until the Water Filter indicator blinks.
3. Tap < or > to reset or dismiss the water filter replacement alarm.
   - Tap < if you want to change the water filter later and dismiss the alarm.
   - Tap > if you have changed the water filter and want to reset the water filter replacement alarm.
4. Wait for 5 seconds or tap ◯ to confirm your selection.
   - The Water Filter indicator stops blinking.

Operations

Resetting or dismissing the mesh filter clean alarm (applicable models only)

The mesh filter clean icon ▦ blinks to alert the user that it is time to clean the mesh filter. You can clean the mesh filter immediately and reset the mesh filter clean alarm, or dismiss the alarm if you want to clean the mesh filter later.

1. Tap any buttons (〈, ◯, or 〉) to wake up the display.
   - This step may not apply to some models.
2. Tap ◯ until the Mesh Filter indicator blinks.
3. Tap 〈 or 〉 to reset or dismiss the mesh filter clean alarm.
   - Tap 〈 if you want to clean the mesh filter later and dismiss the alarm.
   - Tap 〉 if you have cleaned the mesh filter and want to reset the mesh filter clean alarm.
4. Wait for 5 seconds or tap ◯ to confirm your selection.
   - The Mesh Filter indicator stops blinking.

Turning on or off the Auto Open Door function (applicable models only)

You can turn on or off the Auto Open Door function.

1. Tap any buttons (〈, ◯, or 〉) to wake up the display.
   - This step may not apply to some models.
2. Tap ◯ until the Auto Open Door indicator blinks.
3. Tap 〈 or 〉 to turn on or off the function.
   - Tap 〈 to turn it on.
   - Tap 〉 to turn it off.
4. Wait for 5 seconds or tap ◯ to confirm your selection.
   - The Auto Open Door indicator stops blinking.

Turning on or off the Wi-Fi (applicable models only)

To turn the Wi-Fi on or off, tap and hold ◯ or 〉 for 10 seconds. The display shows the status of Wi-Fi for 5 seconds (as shown in the figure).

WI-Fi On

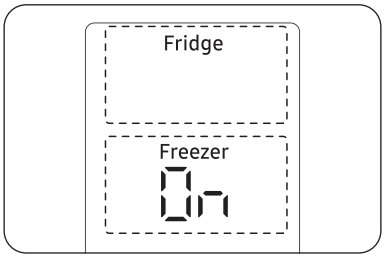

Wi-Fi Off

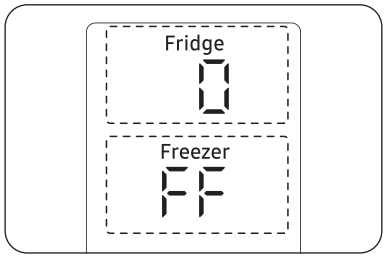

NOTE

- You must turn on the Wi-Fi to connect the refrigerator to the SmartThings app.
- For more information, see the **SmartThings (applicable models only)** section.

Family Hub type

Home screen

NOTE

- For more information about other menus and apps available on the Refrigerator app, see the Online manual of your refrigerator.
- The content of apps and widgets, or their design is subject to change or support may be discontinued without notice, depending on the content provider's policy.
- Children's use of the refrigerator's functions, apps, and services must be supervised by adults.
- Underage transactions with the services must be supervised by adults.



01 Home screen
02 Soft buttons

⚠ CAUTION

When the refrigerator door is subjected to impact, a temporary change in screen brightness may occur. This is a normal characteristic of the display panel. The brightness will return to normal after the door is closed and does not indicate a product malfunction.

Operations

01 Home screen

- Tap a desired app or widget to launch it.
- On the home screen, you can add or remove items such as apps, widgets, pictures, videos, drawings, and texts.
- Tap and hold an item to enter Edit mode. In Edit mode, you can drag and drop an item to a new location on the home screen. When you move the item to a new location, the item turns red if the location is not available.

02 Soft buttons



01 Bixby
- Tap to use Bixby.

02 Task Manager
- Tap to open the Task Manager.

03 Home
- Tap to open the Home screen.

04 Return
- Tap to return to the previous screen.

05 Notification
- Tap to display the Quick Panel.

06 Hide/Show
- Tap to hide or show Soft buttons.
- The Hide/Show button only appears when an app is active.

Fridge Manager

On the Home screen, tap the **Fridge Manager** app.

- You can set the desired temperature or modes for each compartment.
- For more detailed information on the Fridge Manager app, check the online manual.
- To access the online manual from your Family Hub refrigerator, tap **Setting** > **Help & Contact Us** > **Online Manual**.

AI Home Hub type

Home screen

NOTE

- For more information about other menus and apps available on the Refrigerator app, see the Online manual of your refrigerator.
- The content of apps and widgets, or their design is subject to change or support may be discontinued without notice, depending on the content provider's policy.
- Children's use of the refrigerator's functions, apps, and services must be supervised by adults.
- Underage transactions with the services must be supervised by adults.

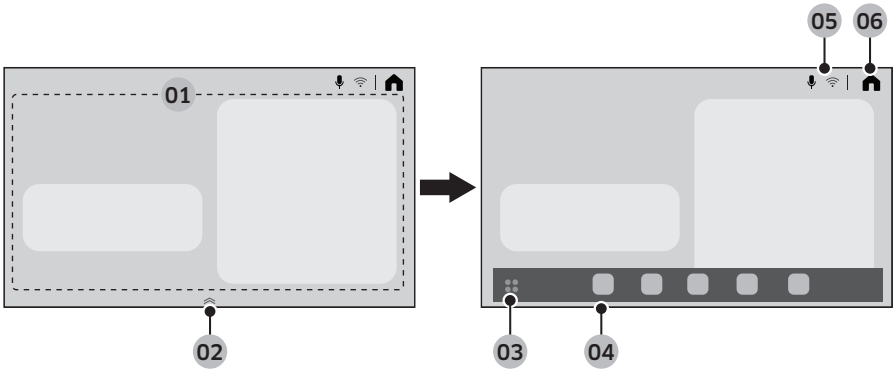

01 Home card area	You can set various functions and check information. • AI Vision Inside: You can manage ingredients stored in the refrigerator. • Recipes: You can receive cooking guidance and recipes. • SmartThings: You can connect your refrigerator to the SmartThings app and control it remotely from the app. • Fridge Manager: You can set the desired temperature or modes for each compartment. • Product Care: You can manage the refrigerator's consumables.
02 App dock handler	• Drag the App dock handler upward to open the App dock. • The App dock handler only appears on the Home screen.
03 App tray button	Tap to view all available apps.
04 App dock	• App dock displays the icons to allow easier access to the frequently used apps. • Maximum five icons are displayed in the App dock which are not editable.

Operations

05 Indicator area	Different icons appear to indicate enabled functions.
06 Home	Tap to go to the Home screen.

Quick Panel

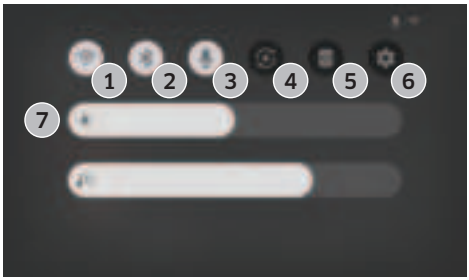

The Quick Panel provides quick access to various settings. Swipe down from the top of the screen to open the Quick Panel.

1	Wi-Fi	• Tap to turn the Wi-Fi on or off. • Touch and hold the icon to access the Wi-Fi settings screen.
2	Bluetooth	• Tap to access the Bluetooth settings screen.
3	Microphone	• Tap to turn the microphone on or off.
4	Smart View	• Tap to access the Smart View screen.
5	Screen off	• Tap to turn off the screen.
6	Settings	• Tap to access Settings.
7	Brightness and Volume	• Slide the corresponding slider to adjust the screen brightness or volume.

Fridge Manager

On the Home screen, tap the Fridge Manager app.

- You can set the desired temperature or modes for each compartment.
- For more detailed information on the Fridge Manager app, check the online manual.
- To access the online manual from your refrigerator , tap ⚙ > General > Support > User manual.

Display reset (Family Hub and AI Home Hub type models only)

If you encounter an abnormal symptom on the display, try resetting the display. This may solve the symptom.

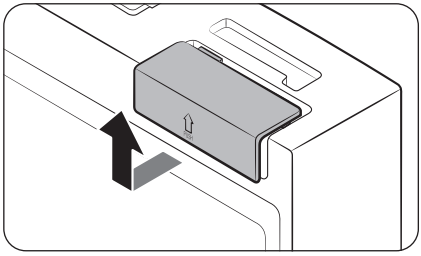

1. Open the right-side fridge door and locate the switch cover on the top right corner of the door.
2. Push up the cover to reveal the power switch.

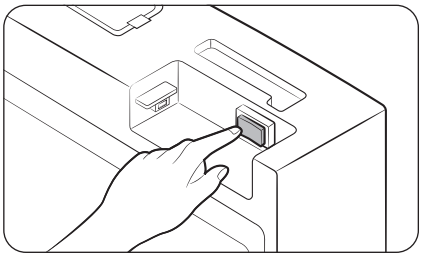

3. Turn the switch off and turn it on again.
4. Reinsert the switch cover to the end until you hear a clicking sound.

Operations

SmartThings (applicable models only)

Installation

Visit the Google Play Store, Galaxy Apps, or Apple App Store and search for “SmartThings”. Download and install the SmartThings app provided by Samsung Electronics to your smart device.

NOTE

- The supporting software version of the SmartThings app is subject to change according to the OS supporting policy the manufacturer provides. In addition, as for the SmartThings app or the functions that the app supports, the new application update policy on the existing OS version can be suspended due to usability or security reasons.
- The SmartThings app is subject to change without notice to improve usability or performance. As the mobile phone OS version is updated every year, the SmartThings is also updated continually according to the latest OS. If you have enquiries regarding the items mentioned above, please contact us on st.service@samsung.com
- Recommended encryption systems include WPA/TKIP and WPA2/AES. Any newer or non-standard Wi-Fi authentication protocols are not supported.
- Wireless networks may be affected by the surrounding wireless communication environment.
- If your Internet service provider has registered the MAC address of your PC or modem for identification, your Samsung Smart Refrigerator may fail to connect to the Internet. If this happens, contact your Internet service provider for technical assistance.
- The firewall settings of your network system may prevent your Samsung Smart Refrigerator from accessing the Internet. Contact your Internet service provider for technical assistance. If this symptom continues, contact a local Samsung service center or retailer.
- To configure the wireless access point (AP) settings, see the user manual of the AP (router).
- Samsung Smart Refrigerators support both Wi-Fi 2.4 GHz with IEEE 802.11 b/g/n and Soft-AP protocols. (IEEE 802.11 n is recommended.)
- Unauthorized Wi-Fi wireless routers may fail to connect to applicable Samsung Smart Refrigerators.

Samsung account

You are required to register your Samsung account to use the app. If you don't have a Samsung account, follow the app's onscreen instructions to create a free Samsung account.

Getting started

Turn on the device you want to connect, open the SmartThings app on your phone, and then follow the instructions below.

If a pop-up appears saying that a new device has been found, tap **ADD NOW**.

If a pop-up doesn't appear, tap the **+** button, and then select the device you want to connect from the list of available devices.

If your device isn't in the list of available devices, tap **Supported Devices**, select the device type (Refrigerator), and then select the specific device model.

Follow the instructions in the app to set up your device. Once setup is complete, your refrigerator will appear as a "card" on your **Devices** screen.

Refrigerator app

Integrated control

You can monitor and control your refrigerator at home and on the go.

- Tap the refrigerator icon on the SmartThings Dashboard or tap the Devices icon at the bottom of the Dashboard, and then tap the refrigerator "card" to open the Refrigerator page.
- Check the operation status or notifications related to your refrigerator, and then change options or settings if necessary.

NOTE

Some options or settings of the refrigerator may not be available for remote control.

Operations

Category	Item	Description
Monitor & Control	Fridge temperature	You can set and monitor the desired temperature of the fridge.
	Power Cool	You can turn Power Cool on or off, and check the current settings.
	Freezer temperature	You can set and monitor the desired temperature of the freezer.
	Power Freeze	You can turn Power Freeze on or off, and check the current settings.
	Ice maker *	You can turn the ice maker on or off.
	AutoFill Pitcher *	You can turn the AutoFill Pitcher function on or off, and check the current settings of the function.
Alarms	Abnormally high temperature	This alarm is triggered when the fridge or freezer has abnormally high temperatures.
	Door opening	This alarm is triggered if the fridge or freezer door is open for more than 2 minutes.
	AutoFill Pitcher overflowing *	If the AutoFill Pitcher function senses an overflow, it triggers this alarm to let you know the status of the overflow.
	Water filter replacement *	This alarm reminds you that the water filter must be replaced.
	Clean mesh filter *	This alarm reminds you that the mesh filter must be cleaned.
AI Energy Mode *	You can turn on or off the AI Energy Mode under the Energy menu in the SmartThings app. You can check the status of the AI Energy Mode on the SmartThings app. On some models, the icon appears on the main panel to indicate that AI Energy Mode is operating. (applicable models only) Turning on the AI Energy Mode decreases energy consumption, but it may also reduce the cooling performance. **NOTE** The AI Energy Mode may not operate according to user settings or the operating environment.	

* applicable models only

Security updates information

Security updates are provided to strengthen the security of your device and protect your personal information. For more information on security updates, visit https://security.samsungda.com.

* The website supports only some languages.

Bixby (Voice recognition - applicable models only)

What is Bixby?

- Bixby is the name of Samsung's artificial intelligence solution that allows for device control by voice.

Using Bixby

- To enable voice recognition, you must connect your device to the SmartThings app via the network.
- And you must agree on the terms and conditions of the Bixby service.
- Once connected, you can control some functions of the device using Bixby on your Samsung smartphone, even though it does not support voice recognition natively.
- To activate Bixby, say "Hi, Bixby" followed by a voice command.
- For more voice recognition commands, refer to the "Voice Commands" section.

Voice Commands

Category	Command (samples)
Temperature	Tell me the temperature of the refrigerator
	Tell me the temperature of the fridge in the refrigerator
	Tell me the temperature of freezer in the refrigerator
Weather	Tell me the weather tomorrow
	How humid is it today?
	How high is the fine dust level today?
	When can I expect rain?
International Time	What time is it now?
	What month is it today by the lunar calender?
	What time is it in New York?

NOTE

Bixby will exit standby mode after a certain amount of time if no command is given. Once enabled, voice recognition may work poorly or malfunction due to surrounding sounds such as TV sound.

Operations

⚠ CAUTION

- When voice recognition is affected
  - Performance may be affected by the user's voice, speech style, pronunciation, and surrounding environment.
  - When using voice recognition, speak louder than the surrounding sounds.
  - To improve the performance of voice recognition, stand within 3 meters from the device and speak clearly.
  - While you are watching TV, voice commands can be recognized in error due to the TV sound.
- Voice recognition not working when...
  - Bixby is turned off in the Bixby menu of the SmartThings app.
  - The microphone is turned off in the microphone setting of the SmartThings app.
- Voice recognition working poorly when...
  - The surrounding sounds are loud (TV sound, music sound, etc)
  - The Wi-Fi signal is weak (Internet connectivity is poor)

Dispenser panel (applicable models only)

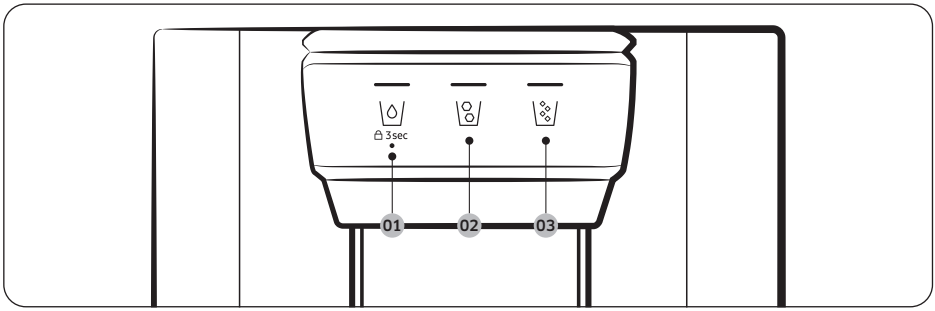

01 \◊/ 02 \◊/

03 \◊/

01 Water / Lock (3 sec)

\◊/	To dispense chilled water, press \◊/. The corresponding indicator turns on.
3 sec (Dispenser panel / Dispenser lever)	To prevent use of the dispenser panel buttons and the dispenser lever, press and hold \◊/ for more than 3 seconds. If you press and hold the button again for more than 3 seconds, the dispenser lock will be deactivated.

02 Cubed Ice

Press \◊/ to dispense cubed ice. The corresponding indicator turns on.

03 Crushed Ice

Press \◊/ to dispense crushed ice. The corresponding indicator turns on.

Operations

Special features

The refrigerator features user-oriented devices that you can use to benefit from.

Auto Open Door function (applicable models only)

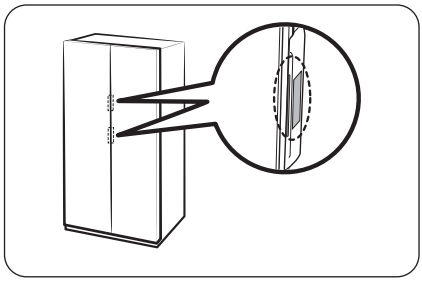

Touch the sensor near the door handle. The door will open.

- The default setting is **Off**.
- To turn on the function, refer to the followings.
  - General type: Refer to the **Turning on or off the Auto Open Door function (applicable models only)** section on page **46**.
  - Family Hub type: On the Fridge Manager app, tap **Settings**, and then turn on the **Auto Open Door**.
  - AI Home Hub type: On the Home screen, tap ⚙ > **Refrigerator** > **Auto open door** and select **On**.

NOTE

- If both sensors are touched simultaneously, the door on the first touched sensor opens and then so does the other door within about 2 seconds.
- The door does not close automatically. Close the door manually after use.
- The angle (degree) at which the doors open may vary depending on the installation environment, such as the floor where the refrigerator is installed, the level of the refrigerator, and the load of the food stored in the door bin.
  - If the doors open too wide or not wide enough, check and make sure the refrigerator is level. (For more information, see the "**STEP 4 Adjust the levelling feet**" section on page **24**.)

⚠ CAUTION

- The Auto Open Door function may malfunction if you open and close the door repeatedly.
- Do not push or force stop the door while it is opening automatically. It may cause the product to malfunction.
  - Be cautious not to get hit by the doors when they open automatically.
- If the door resists opening after repeated door opening, wait for about a minute and then try again. (It may be hard to open the door immediately after closing it due to air pressure change inside the refrigerator which occurs when you open and close the door.)
- Accidental touches to the sensor can cause the door to open, verify that it is closed.

Voice (applicable models only)

Voice recognition setup

On the SmartThings app, set “Sound” to “Voice”.

Some of voice commands

1	Autofill pitcher detected water overflow
2	The refrigerator door has been opened
3	Something went wrong.
4	The mode has been changed
5	Power cool is now in operation
6	Power freeze is now in operation
7	The temperature inside the refrigerator has increased
8	The temperature is now set

NOTE

When you set “Sound” to “Disabled” in your refrigerator, voice recognition will be turned off accordingly.

Operations

Water pitcher (AutoFill Pitcher) (applicable models only)

Cold, purified water is always ready in the AutoFill Pitcher. You can put tea or fruits in the infuser to enjoy the various infused water you like.

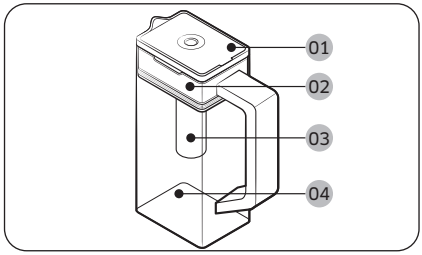

01 Lid
02 Infuser holder
03 Infuser
04 Body

To fill the Water pitcher

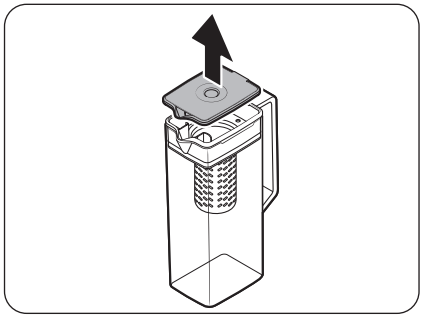

1. Grasp a handle groove of the **lid**, and then pull up to open the **lid**.
2. Put tea leaves or fruit to your taste into the infuser.

NOTE

If you want to keep the infused water in its initial concentration, turn the AutoFill Pitcher function off.

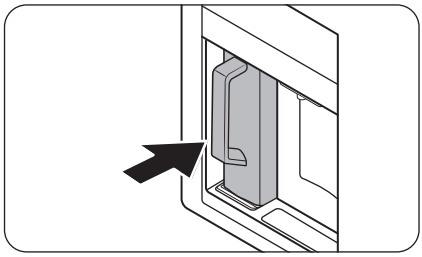

3. Enable the AutoFill Pitcher function on the control panel. Open the Beverage Center door, and then mount the water pitcher onto the holder. Push it straight in as shown in the figure.

⚠ CAUTION

Make sure the water pitcher fits in the water pitcher holder.

4. Close the door. The water pitcher will start to fill with chilled water a short time later.

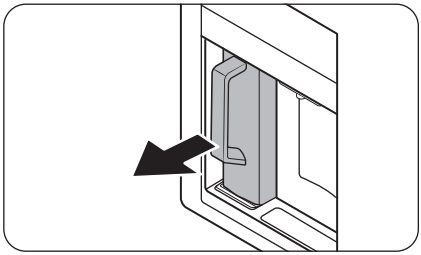

5. To drink tea, open the Beverage Center door, and then detach the water pitcher. Pull it straight out.

⚠ CAUTION

- We recommend consuming fruit infused water within 24 hours. After that, the infused water can spoil over time.
- You must clean the water pitcher after you have consumed the infused water. Also clean the water pitcher if you haven't used it for a long time.

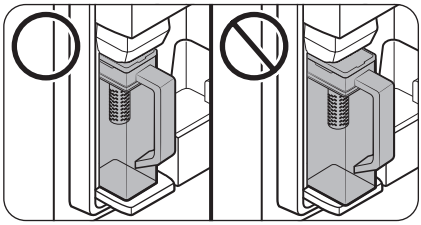

- To prevent the water pitcher from tipping over or leaking, make sure the water pitcher fits in the water pitcher holder.

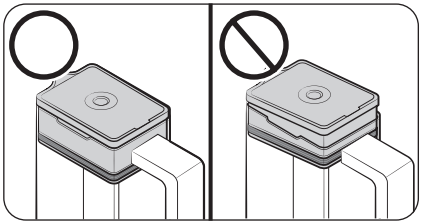

- To prevent the water pitcher from spilling over or leaking, make sure the infuser holder is properly inserted.

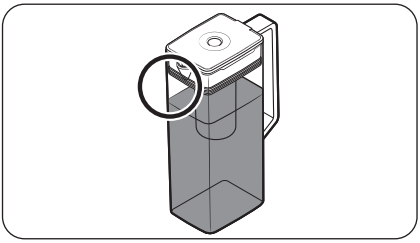

NOTE

- If the front side (specifically marked area) of the water pitcher has too much moisture, the water pitcher may not fully fill. Remove the moisture, and then try again.
- AutoFill Pitcher function will stop supplying water to the water pitcher if the water pitcher does not fill after a certain amount of time. If this happens, check if the water line is properly connected. Remove and reinsert the water pitcher, and then try again.
- If the water pitcher is not fully filled, check if there is water in the water tank inside the fridge. If the water tank is empty, fill the tank with water first. Then, remove the water pitcher and insert the water pitcher back to supply water into the water pitcher. (applicable models only)

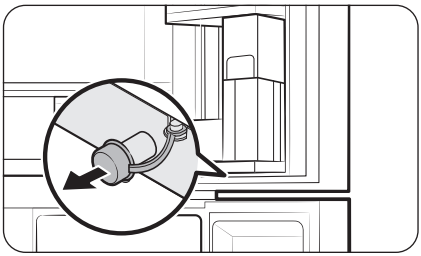

- Wipe around the water pitcher holder if the water pitcher overflows or leaks.
- Water drops off if the rubber cap is opened.
- The AutoFill Pitcher indicator on the control panel will blink if there is a leak. In case of a leak, open the rubber cap so that the leaked water drains. If the indicator does not stop blinking after draining, there might be a system failure. Contact your local Samsung service center.

NOTE

- You must clean the water pitcher after you have consumed the infused water. You must also clean the water pitcher if you have not used it for a long time or left the full pitcher for more than three days.
- If the infuser is not properly cleaned, the scent of the tea or fruits you previously used in the infuser may remain. If you are not going to use the infuser, separate it from the pitcher and store it safely.
- If you have not used the water filter for a long time, pour away the first two pitchers of water. Then, clean the water pitcher thoroughly and use it.

Water dispenser (applicable models only)

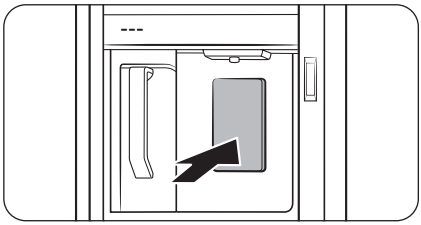

To dispense chilled water, open the Beverage Center and press the dispenser lever.

NOTE

- The dispenser will stop dispensing if you keep pushing the dispenser lever for about 1 minute. To dispense more water, release and push the lever again.
- Make sure the glass is in line with the dispenser to prevent the dispensed water from spilling out.
- If you do not use the water dispenser for 2-3 days, the dispensed water may have an abnormal smell or taste. This is not a system failure. Discard the first 1-2 glasses of water.
- If the water tank inside the fridge is empty, using the AutoFill function or pressing the water dispenser lever will let air into the water line hose. If you fill the water tank while there is air in the water line hose, using the AutoFill function or pressing the water dispenser lever may cause water to spurt out.

Water clouding

Water supplied to the refrigerator flows through a core alkaline filter. During this filtering process, the water pressure of the water increases and the water becomes saturated with oxygen and nitrogen. This causes the water to look misty or cloudy temporarily when dispensed. This is normal and the water will look clear after a few seconds.

Operations

Water/Ice dispenser (applicable models only)

Using the dispenser, you can dispense water with or without ice.

The water dispenser offers 3 options: chilled water, cubed ice, and crushed ice. To dispense chilled water, press \ on the dispenser panel. Put a water glass under the dispenser, and then push the dispenser lever.

To dispense water with ice

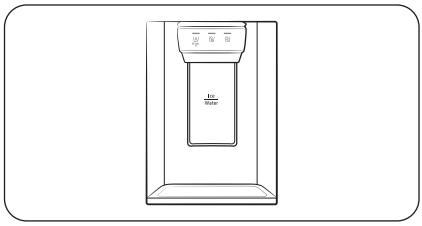

1. With the Ice Maker enabled, press \ or \ to select the ice type.
2. Put a water glass under the dispenser, and then push the **dispenser lever** with the glass. Ice will be dispensed from the dispenser.
3. Press \ to select water.
4. Push the **dispenser lever** with the glass. Water will be dispensed from the dispenser.

NOTE

- The dispenser will stop dispensing if you keep pushing the dispenser lever for about 1 minute. To dispense more water, release and push the lever again.
- Make sure the glass is in line with the dispenser to prevent the dispensed water from spilling out.
- If you do not use the water dispenser for 2-3 days, the dispensed water may have an abnormal smell or taste. This is not a system failure. Discard the first 1-2 glasses of water.

Ice maker (applicable models only)

The refrigerator has a built-in ice maker that automatically dispenses ice so that you can enjoy filtered water with cubed or crushed ice.

Ice making

After you have installed your refrigerator and plugged it in, follow these instructions to ensure proper ice making and to keep the ice bucket full of ice:

1. Let the refrigerator operate for at least 24 hours to ensure optimal performance.
2. Dispense the first 4 to 6 ice cubes into a glass.
3. Wait another 8 hours and dispense another 4 to 6 ice cubes.
4. Then, wait another 16 hours and dispense the first glass-full of ice.

NOTE

- If you consume all the ice at once, you must wait 8 hours before dispensing the first 4 to 6 cubes. This ensures that the ice bucket is filled with ice properly.
- Ice cubes generated rapidly may look white, which is normal.

⚠ CAUTION

Dispense the ice according to the size of the cup.

- If you dispense excessive amount, ice may fall out on the ground and cause personal injury.
- Ice may accumulate and block the ice chute.

To fill the water tank (applicable models only)

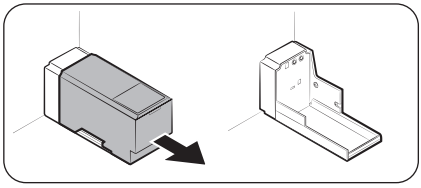

For first-time use, clean the inner side of the water tank and dry well.

1. Hold both handgrips on the front of the tank, and slide out as shown.

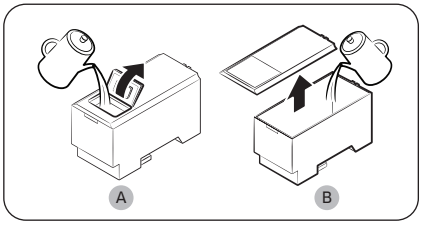

2. Open the front lid (A) of the cover or the entire cover (B) and fill the tank with a max of 5 litres water.

⚠ CAUTION

- Do not exceed the max line. Water overflows.
- Fill with potable water only.

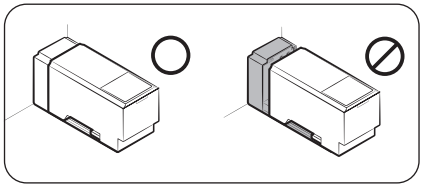

3. Reinsert the water tank and fit into the dispenser mechanism. Make sure the front side (with the front lid) of the tank faces to the front.

⚠ CAUTION

- Make sure the water tank fits into the shelf. Otherwise, the water tank may not operate properly.
- Do not use the refrigerator without inserting the water tank. This may decrease the cooling performance.
- Fill the tank only with potable water such as mineral or purified water. Do not use other liquid.
- Use caution when moving a filled tank. Physical injury may occur if the tank is dropped.
- Do not try to disassemble the internal pump yourself. If the internal pump is damaged or disconnected from the water tank, the dispenser does not operate.

For first-time use

- Push the dispenser lever for 10 seconds to emit air from the hoses of the water supply system.
- Discard the first six glasses of water to remove impurities in the water supply system.

Ice making (applicable models only)

The refrigerator has a built-in ice maker that automatically dispenses ice so that you can enjoy filtered water with cubed or crushed ice to your preference.

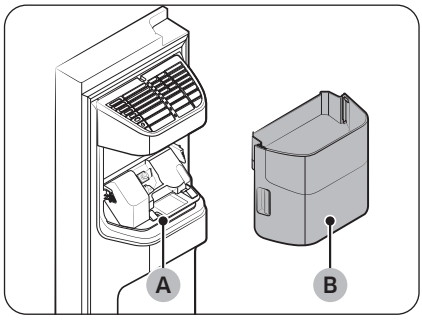

If ice does not dispense, first check the ice maker if it makes ice properly.

To check the ice maker

1. Gently hold the icemaker bucket (B) with both hands and remove it from the ice chute (A).
2. Check the icemaker bucket if it contains ice as appropriate.

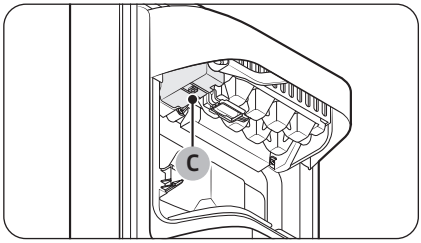

3. Press the **button (C)** on the bottom of the ice maker. You will hear a chime (ding-dong) at the press of the button.
4. You will hear another chime if the ice maker operates properly.

NOTE

If this symptom continues, contact the water line installer or a local Samsung service centre.

⚠ CAUTION

- Do not press the button repeatedly after the ice tray is filled with ice or water. Water may overflow or ice may be jammed.
- When the refrigerator recovers power supply after a power failure, the icemaker bucket may contain a mix of melted and jammed ice cubes, resulting in a system failure. To prevent this, make sure to empty the icemaker bucket before using the refrigerator.
- To prevent dropping the icemaker bucket, make sure to use both hands when removing or reinserting the icemaker bucket.
- Do not let children hang on or play with the ice dispenser or the icemaker bucket. Children may get hurt.
- Do not put fingers or other objects into the dispenser hole or the ice chute. This may cause physical injury or property damage.

NOTE

- When the ice maker is set to 'ON' refrigerator will keep making ice even when you remove the ice bucket.
- Make sure to set the ice maker to 'OFF' when you are not going to use the ice maker.
- Removal of the icemaker bucket does not affect the thermal and mechanical performance of the refrigerator.
- The declared freezer volume is measured with the freezer guide and the bottom shelf, after removing the ice maker, upper and lower drawers.

Operations

To secure more storage space (applicable models only)

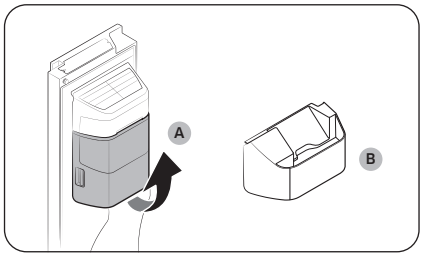

If you do not use the ice maker and need more storage space, remove the **icemaker bucket (A)**. Then, insert the **Freezer guide (Optional) (B)** into the icemaker bucket's place.

⚠ CAUTION

If the icemaker bucket has been removed, you must turn the ice maker off.

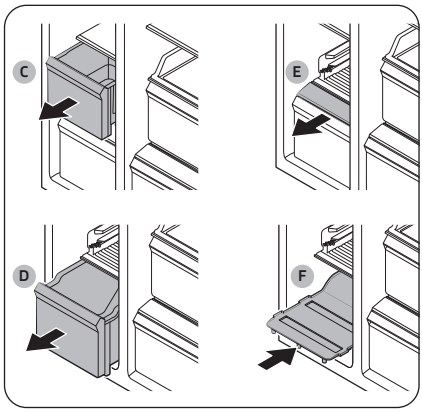

To secure more space, remove the **upper drawer (C)**, **lower drawer (D)**, and **lower drawer cover (E)**. Then, insert the provided **bottom shelf (F)**.

NOTE

- Removing the drawers does not affect the temperature or usage of the freezer.
- The declared freezer volume is measured with the bottom shelf, after removing the upper drawer, lower drawer, and lower drawer cover.

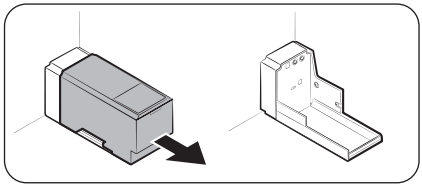

For more space, remove the water tank and use the space to store more items.

Icemaker bucket

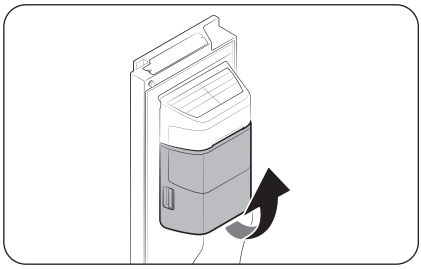

If you do not dispense ice for an extended period, ice may form clumps inside the bucket. If this happens, remove and empty the icemaker bucket.

1. To remove the icemaker bucket, gently lift it up and pull out slowly while holding the handgrips with both hands.
2. Remove and empty the icemaker bucket.

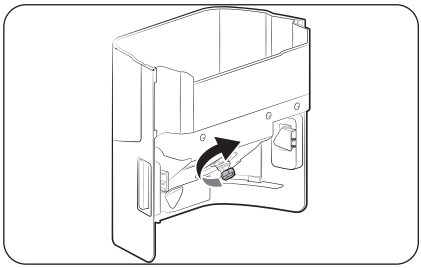

3. When done, turn the gear handle on the rear of the bucket by 90°, and then put the bucket back into position. Make sure the bucket is inserted properly until you hear a clicking sound.

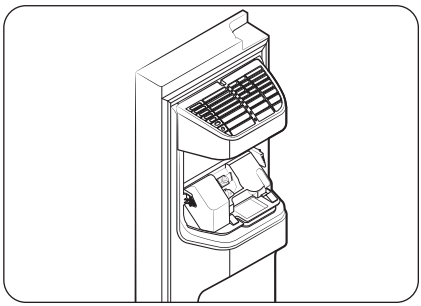

⚠ CAUTION

- Do not apply excessive force to the bucket cover. The cover may break.
- Do not close the door hard. Water may spill over the ice maker.
- To prevent injury, make sure to clean up any ice or water that has fallen on the floor.
- To prevent accidents or injury, do not let children play with the water dispenser or the ice maker.
- Do not put your hand or an object into the ice chute. This may cause physical injury or product damage.

NOTE

- Any sound from the ice maker is normal, which outputs during the ice making process.
- While the door is open, neither the ice maker nor the water dispenser operates.

Operations

Water pressure

If you want to check how much water flows into the ice tray, follow these steps.

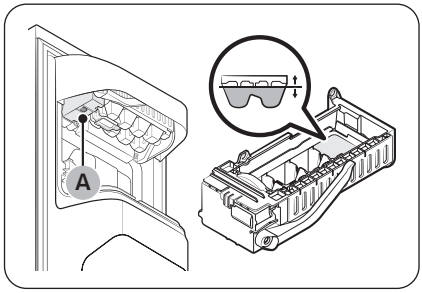

1. Remove the ice bucket.
2. Press the **button (A)** on the bottom of the ice maker. Normally, the ice tray fills with water in a few minutes.
3. If the water level is lower than expected, check the water pressure of the water supply line from the water source. This is not a system failure.

⚠ CAUTION

- Do not repeatedly press the button on the bottom of the ice maker when the tray is filled with water. Water may overflow or ice may be jammed.
- Make sure the icemaker bucket is inserted properly. Otherwise, the ice maker will not operate.
- If there is a power failure, remove the ice tray. Water may flow.

Auto Ice Maker (applicable models only)

The refrigerator has a built-in ice maker that automatically dispenses ice.

- The overall design and/or accessories may differ with the model.
- The ice scoop is provided in the refrigerator.

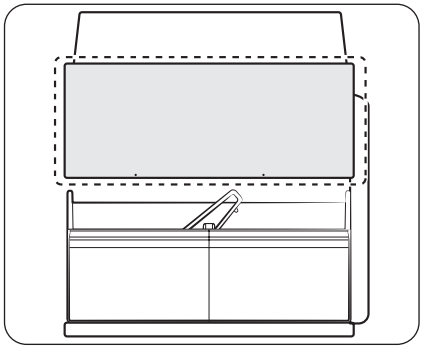

- This product has two types of ice makers.
- You can simply slide out the ice bucket tray to use ice, and then slide it back in after use.

⚠ WARNING

Choking hazard: Ice may cause choking in small children.

Ice making

After you have installed your refrigerator and plugged it in, follow these instructions to ensure proper ice making and to keep the ice bucket full of ice.

For first-time use

- Let the ice maker make ice for 1-2 days.
- Discard the first 1-2 buckets of ice to remove impurities in the water supply system.

Diagnosis

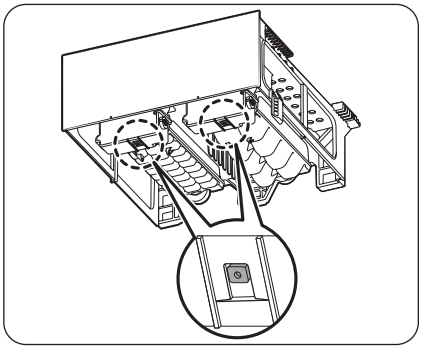

- The overall design and/or accessories may differ with the model.
- If ice does not dispense, first check the status of ice maker using the **Test** button on the bottom of the ice maker.
- Press the **Test** button on the bottom of the ice maker. You will hear a chime (ding-dong) when you press the button. You will hear another chime if the ice maker is operating properly.

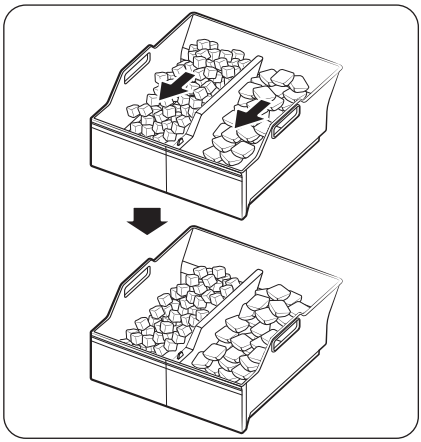

- Ice accumulating on one side of the tray is normal. Arrange the ice evenly in the tray to store more ice.

Operations

Ice making (applicable models only)

Twist ice maker

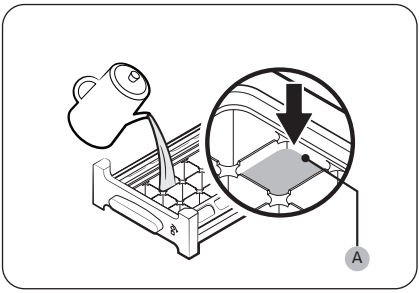

1. Open the freezer door, and slide open the ice tray.
2. Fill the tray with water up to the maximum level (A) marked on the inner rear of the tray.
3. Slide the tray back into position.

NOTE

The ice making time depends on your temperature settings.

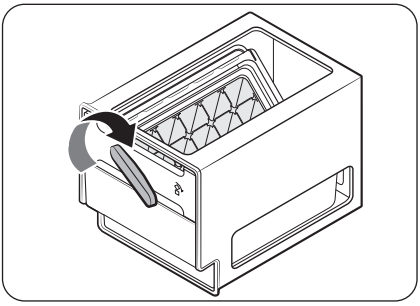

NOTE

- Make sure the ice cube storage bin is in place under the ice tray.
- To dispense the ice cubes, turn the handle of the bin to the right to empty half of the ice cubes into the bin. Then, turn it to the left to empty the other half.
- Take out the bin by slightly twisting and pulling to the front.

Maintenance

Handle and care

Shelves (fridge/freezer) / Wine rack (applicable models only)

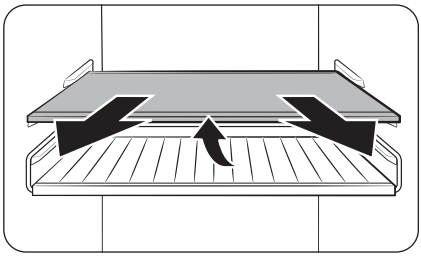

1. Pull out the shelf (or wine rack) a little. Then, while lifting the rear side, pull out.

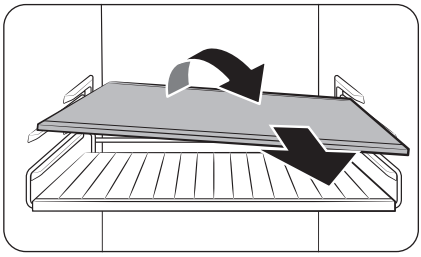

2. Twist the shelf (or wine rack) diagonally to remove.

⚠ CAUTION

- The shelf must be inserted correctly. Do not insert upside down.
- Glass containers may scratch the surface of glass shelves.
- Do not insert a shelf in the wine rack position. This may damage the refrigerator. (applicable models only)

Door bins

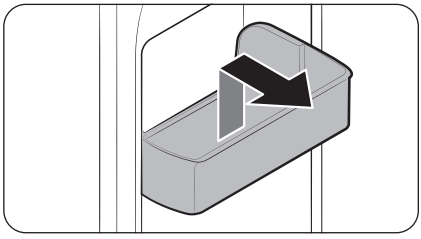

To remove a door bin, hold the front sides of the bin and gently lift up to remove.

Maintenance

Drawers

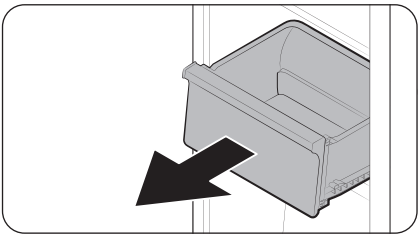

Gently lift up the front of the drawer and slide out.

Vegetable / Dried food and meat storage drawer

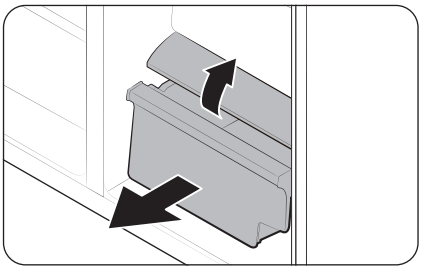

To remove the vegetable drawer from the fridge or the dry drawer from the freezer:

1. First, remove surrounding multipurpose drawers if necessary.

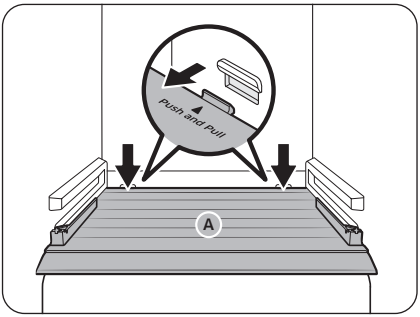

2. If your refrigerator has a **cover (A)** for the vegetable/dry drawer, remove it in the following method.
   a. Pull the drawer halfway out.
   b. Pull the cover while pressing the rear sides (as marked in the figure).
3. Gently pull out the vegetable/dry drawer.

Icemaker bucket (applicable models only)

To remove the ice maker bucket, see the Icemaker bucket section on page 69.

Where to keep the scoop (applicable models only)

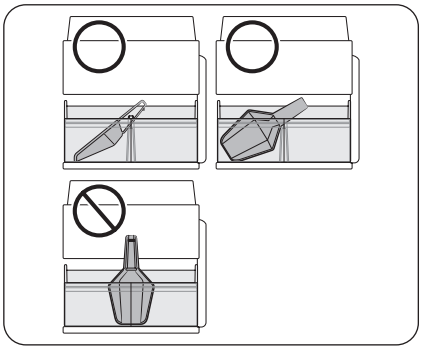

Keep the scoop in the front part of the ice bucket. Place the scoop as shown in the figure, making sure it does not interfere with the ice dispenser when the ice bucket tray is inserted.

NOTE

If the ice bucket tray is not fully inserted, ice may drop behind (and outside) the ice bucket or the ice maker may stop making ice.

Autofill pitcher (applicable models only)

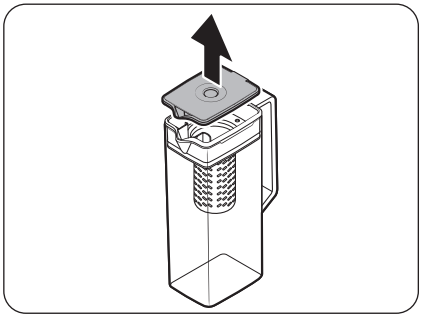

1. Grasp a handle groove of the **lid**, and then pull up to remove.

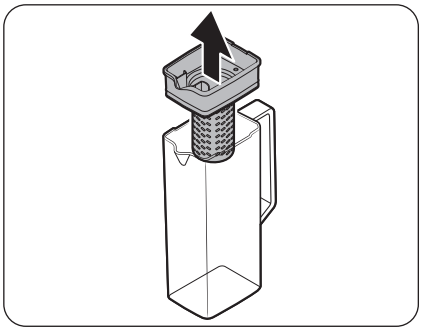

2. Grasp both sides of the **infuser holder**, and then lift to remove.

Maintenance

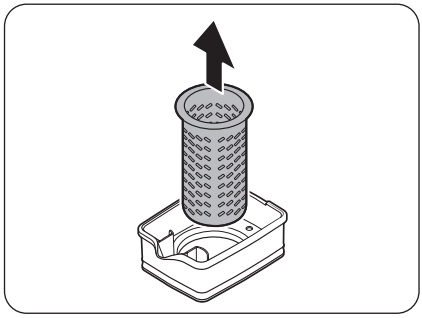

3. While slightly twisting the **infuser**, pull it out of the sealed mouth.
4. Clean the **infuser** with neutral agents and running water. Rinse and dry well.
5. Reassemble the Autofill pitcher in the reverse order of disassembly.

⚠ CAUTION

The water pitcher and lid are not microwave safe and can melt or deform if exposed to heat (including hot water). Please hand wash in cool or warm water as needed. (The water temperature must be below 70 °C .)

Cleaning

Interior and exterior

⚠ WARNING

- Do not use benzene, thinner, vinegar, liquid bleach, baking soda, citric, salt mixtures or home/car detergent such as Clorox™ for cleaning purposes. They may damage the surface of the refrigerator and cause a fire.
- Do not spray water onto the refrigerator. This may cause electric shock.
- Do not put fingers or other objects into the dispenser hole.

Regularly use a dry cloth to remove all foreign substances such as dust or water from the power plug terminals and contact points.

1. Unplug the power cord.
2. Use a moistened, soft, lint-free cloth or paper towel to clean the refrigerator's interior and exterior.
3. When done, use a dry cloth or paper towel to dry well.
4. Plug in the power cord.

Ice / Water dispenser (applicable models only)

NOTE

For hygienic purposes, frequently clean the dispenser area.

⚠ CAUTION

When crushed ice is selected, some residual ice chips may collect in the ice chute. To prevent this, remove the residual ice from the chute using a soft, clean cloth.

Dispenser nozzle (applicable models only)

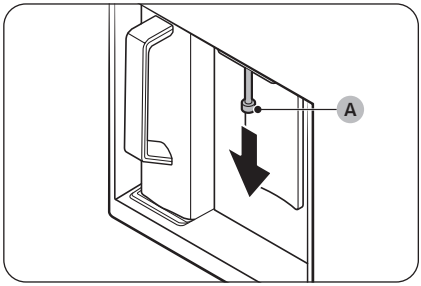

1. Hold the end of the dispenser nozzle (A).
2. While turning the dispenser nozzle (A) left, pull it down to remove it from the dispenser.

Maintenance

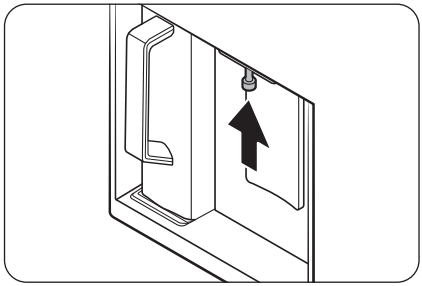

3. Clean the dispenser nozzle thoroughly, and then assemble it back.

⚠ CAUTION

- Fully insert the dispenser nozzle, so it is back to its original position.
- Do not use a sponge with rough textures for cleaning the dispenser nozzle.

Rubber seals

If the rubber seals of a door become dirty, the door may not close properly and reducing refrigerator performance and efficiency. Use a mild detergent and damp cloth to clean the rubber seals. Then, dry well with a cloth.

Rear panel

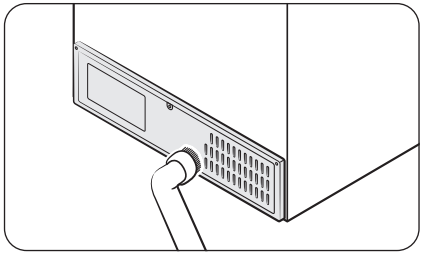

To keep cords and exposed parts of the rear panel free of dirt, vacuum the panel once or twice a year.

⚠ CAUTION

Do not remove the rear **panel cover**. Electric shock may occur.

Mesh filter (applicable models only)

When it is time to clean the mesh filter, a notification will appear on the main panel or in the SmartThings app. Clean the mesh filter when the notification appears.

- A notification to clean the mesh filter appears at least once a year, but the interval may vary depending on the season, region, or usage environment.

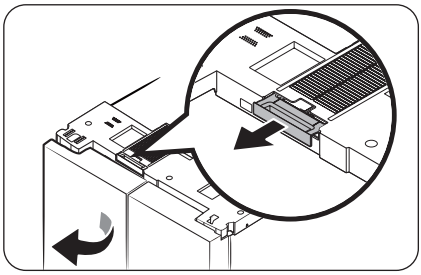

- Open the left door of the fridge and remove the mesh filter located at the top of the refrigerator.
  - After removing the dust, gently wash the filter with lukewarm water mixed with neutral detergent.

NOTE

- Dust may fall off when detaching the filter.
- The mesh filter may get damaged if you scrub it with a brush or wash it with hot water.
- If there is a strong odor or severe contamination, soak the filter in lukewarm water mixed with neutral detergent for about 30 minutes before rinsing.

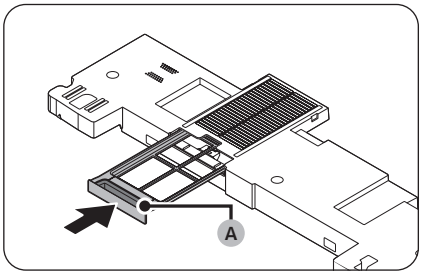

- After completely drying the filter, insert it into its place with the filter handle (A) facing outward.
  - When drying the filter, avoid direct sunlight and allow it to dry thoroughly in the shade.

Maintenance

Replacement

Lamps

The lamps are not user-serviceable. To replace the lamps of the refrigerator, contact a local Samsung service centre.

Lamp (Light Source)

This product contains a light source of energy efficiency class <G>.

The lamp(s) and/or control gear(s) are not user-serviceable. To replace the lamp(s) and/or control gear(s) in the product, contact a local Samsung service centre.

For detailed instructions on replacing lamp(s) or control gear(s) in your product, visit the Samsung website (http://www.samsung.com), go to Support > Support home, and then enter the model name.

For detailed instructions on dismantling lamp(s) and/or control gear(s), simply follow the replacement instruction reached as described above.

Troubleshooting

Before calling for service, review the checkpoints below. Any service calls regarding normal situations (No Defect Cases) will be charged to users.

General

Temperature

Symptom	Possible causes	Solution
Fridge/freezer does not operate. Fridge/freezer temperature is warm.	• Power cord is not plugged in properly.	• Properly plug in the power cord.
	• Temperature control is not set correctly.	• Set the temperature lower.
	• Refrigerator is located near a heat source or direct sunlight.	• Keep the refrigerator away from direct sunlight or a heat source.
	• Not enough clearance between refrigerator and nearby walls or cabinets.	• We recommend that the gap between the refrigerator and nearby walls (or cabinets) is more than 50 mm.
	• The refrigerator is overloaded. Food is blocking the refrigerator vents.	• Do not overload the refrigerator. Do not allow food to block vents.
Fridge/freezer is over-cooling.	• Temperature control is not set correctly.	• Set the temperature higher.
Interior wall is hot.	• Refrigerator has heat-proof piping in the interior wall.	• To prevent condensation from forming, the refrigerator has heat-proof piping in the front corners. If the ambient temperature rises, this equipment may not work effectively. This is not a system failure. 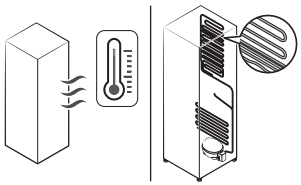

Troubleshooting

Symptom	Possible causes	Solution
Lighting, Control Panel, Ice Maker, Water & Ice Dispenser do not operate simultaneously.	• Mode control is not set correctly.	**1.** Tap and hold ○ and 〉 simultaneously for 6 seconds. **2.** When the display blinks, press 〉. **3.** Select next button. • If the Symptom continues after following these steps, please contact your Samsung Electronics Service Centre.

Odour

Symptom	Possible causes	Solution
Refrigerator has odours.	• Spoiled food.	• Clean the refrigerator and remove any spoiled food.
	• Food with strong odours.	• Make sure strong smelling food is wrapped airtight.

Frost

Symptom	Possible causes	Solution
Frost around the vents.	• Food is blocking the vents.	• Make sure no food blocks the refrigerator vents.
Frost on interior walls.	• Door is not closed properly.	• Make sure food does not block the door. Clean the door gasket.

Condensation

Symptom	Possible causes	Solution
Condensation forms on the interior walls.	• If door is left open, moisture enters the refrigerator.	• Remove the moisture and do not leave a door open for extended periods of time.
	• Food with high moisture content.	• Make sure food is wrapped airtight.

Water/ice (dispenser models only)

Symptom	Possible causes	Solution
Water flow is weaker than normal.	• Water pressure is too low.	• Make sure the water pressure is between 30 to 125 psi.
Ice maker makes a buzzing sound.	• The ice maker function is activated, but the water supply to the refrigerator has not been connected.	• Turn off the Ice maker.
Ice maker does not make ice.	• Ice maker has just been installed.	• You must wait for 24 hours for the refrigerator to make ice.
	• Freezer temperature is too high.	• Set the freezer temperature below -18 °C or -20 °C in warm ambient air.
	• Dispenser panel Lock is activated.	• Press and hold for 3 seconds to deactivate the dispenser panel Lock.
	• Ice maker is off.	• Turn on the ice maker.
	• Ice bucket tray is not fully inserted.	• Push the ice bucket tray to fully insert it.
Ice does not dispense.	• Ice may jam if the ice dispenser is not used for a long time (approx. 3 weeks).	• If you won't be using the refrigerator for a long time, empty the ice bucket tray and turn off the ice maker.
	• Ice bucket tray is not properly inserted.	• Make sure the ice bucket tray is properly inserted.
	• Water line is not connected properly or water supply is not on.	• Check the water installation conditions. 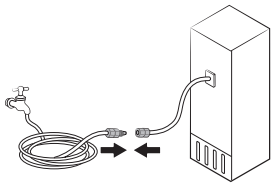

Troubleshooting

Symptom	Possible causes	Solution
Water does not dispense.	• Water line is not connected properly or water supply is not on.	• Check the water installation conditions. 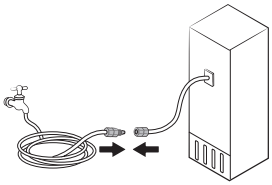
	• Dispenser panel Lock is activated.	• Press and hold \ / for 3 seconds to deactivate the dispenser panel Lock.
	• A third-party water filter was installed.	• Use only Samsung-provided or approved filters. • Unapproved filters may leak and damage the refrigerator.
When see the icon.	General type • The indicates is on the main panel. Family Hub, AI Home Hub type • The indicator turns on red.	General type • Replace the water filter. After replacing, press Filter Reset. Family Hub type • Replace the water filter. After replacing, reset the filter in Fridge Manager > Fridge Settings > Water Filter. AI Home Hub type • Replace the water filter. After replacing, reset the filter in Product Care > Water Filter.

Auto Open Door (applicable models only)

Symptom		Possible causes	Solution
The fridge doors do not open wide enough.	Both doors 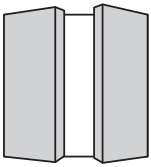	• The rear sides of the refrigerator are low.	• Raise the rear sides of the refrigerator to level it. * 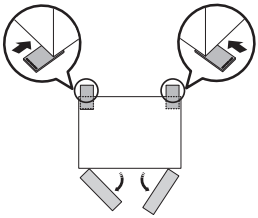
	Left door 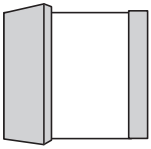	• The rear-right side of the refrigerator is low.	• Raise the rear-right side of the refrigerator to level it. * 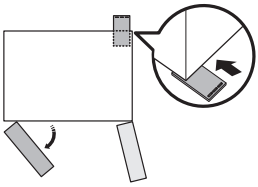
	Right door 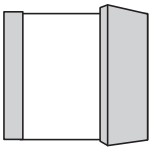	• The rear-left side of the refrigerator is low.	• Raise the rear-left side of the refrigerator to level it. * 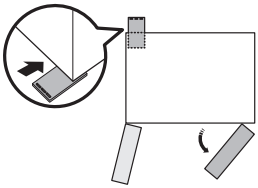

Troubleshooting

Symptom	Possible causes	Solution
The fridge doors open too wide. 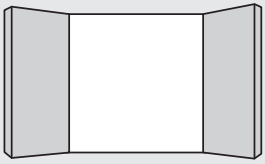	• The front sides of the refrigerator are low.	• Raise the front sides of the refrigerator to level it. * 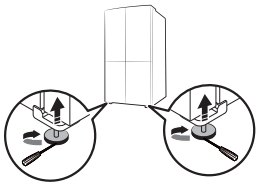

* For more information on leveling the refrigerator, see the "**STEP 4 Adjust the levelling feet**" section on page **24**.)

Do you hear abnormal sounds from the refrigerator?

Before calling for service, review the checkpoints below. Any service calls related to normal sounds will be charged to the user.

These sounds are normal.

- When starting or ending an operation, the refrigerator may make sounds similar to a car engine igniting. As the operation stabilizes, the sounds will decrease.

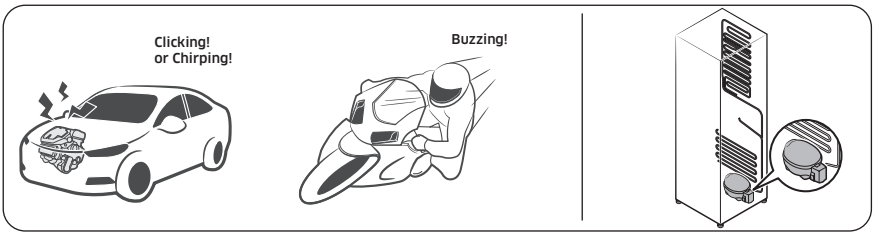

- While the fan is operating, these sounds may occur. When the refrigerator reaches the set temperature, no fan sound will occur.



- During a defrost cycle, water may drip on the defrost heater, causing sizzling sounds.

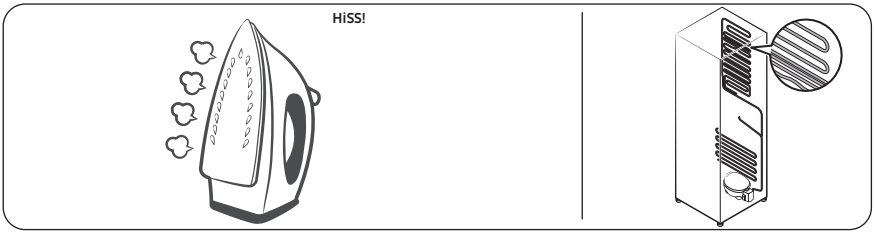

Troubleshooting

- As the refrigerator cools or freezes, refrigerant gas moves through sealed pipes, causing bubbling sounds.

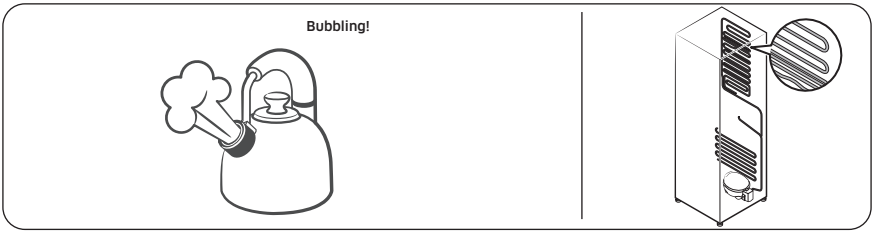

- As the refrigerator temperature increases or decreases, plastic parts contract and expand, creating knocking noises. These noises occur during the defrosting cycle or when electronic parts are working.

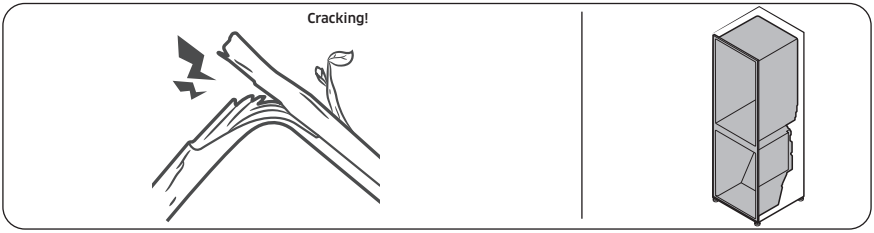

- For ice maker models: When the water valve opens to fill the ice maker, buzzing sounds may occur.
- Because of pressure equalizing when opening and closing the refrigerator door, whooshing sounds may occur.

SmartThings (applicable models only)

Symptom	Action
Could not find “SmartThings” in the app market.	• The supporting software version of the SmartThings app is subject to change according to the OS supporting policy the manufacturer provides. In addition, as for the SmartThings app or the functions that the app supports, the new application update policy on the existing OS version can be suspended due to usability or security reasons.
The SmartThings app fails to operate.	• The SmartThings app is available for applicable models only. • The old Samsung Smart Refrigerator app cannot connect with Samsung Smart Home models.
The SmartThings app is installed but is not connected to my refrigerator.	• You must log into your Samsung account to use the app. • Make sure that your router is operating normally. • If the Wi-Fi icon on the refrigerator’s display is off, this indicates that no network connection has been established yet. In this case, use the SmartThings app to connect and register your refrigerator to the access point (AP) of your house.
Could not log into the app.	• You must log into your Samsung account to use the app. • If you don’t have a Samsung account, follow the app’s onscreen instructions to create one.
An error message appears when I try to register my refrigerator.	• Easy Connection may fail due to the distance from your access point (AP) or electrical interference from the surrounding environment. Wait a moment and try again.
The SmartThings app is successfully connected to my refrigerator but does not run.	• Exit and restart the SmartThings app, or disconnect and reconnect the router. • Power off the refrigerator, and then power it on again after 1 minute.
The Wi-Fi icon is blinking. ( ) (applicable models only)	• Connect your refrigerator with the SmartThings app before use. When the connection is made successfully, the indicator stops blinking. - If you fail to make connection or don’t want to use the app, press and hold the ﹥ button for 10 seconds. The indicator stops blinking with "O FF" shown on the temperature display.

Open Source Announcement

Open Source Announcement

(For Wi-Fi models only)
The software included in this product contains open source software.
The following URL http://opensource.samsung.com/opensource/SMART_TP1_0/seq/0 leads to open source license information as related to this product.

Appendix

(For EU regions only)

Safety Instruction

- For the most efficient use of energy, please keep the all inner fittings such as baskets, drawers, shelves and ice cube tray on the position supplied by manufacturer.
- This refrigerating appliance is not intended to be used as a built-in appliance.

Install Instruction

For refrigerating appliances with climate class

Depending on the climate class, This refrigerating appliance is intended to be used at ambient temperatures range as specified following table.

The climate class can be found on the rating plate. The product may not operate properly at temperatures outside of the specific range.

You can find climate class on label inside of your refrigerator

Effective temperature range

The refrigerator is designed to operate normally in the temperature range specified by its class rating.

Class	Symbol	Ambient Temperature range (°C)	
		IEC 62552 (ISO 15502)	ISO 8561
Extended Temperate	SN	+10 to +32	+10 to +32
Temperate	N	+16 to +32	+16 to +32
Subtropical	ST	+16 to +38	+18 to +38
Tropical	T	+16 to +43	+18 to +43

NOTE

The cooling performance and power consumption of the refrigerator may be affected by the ambient temperature, the door-opening frequency, and the location of the refrigerator. We recommend adjusting the temperature settings as appropriate.

Appendix

Temperature Instruction

Recommended Temperature

The optimal temperature setting for food storage:

- Fridge: 3 ℃
- Freezer: -19 ℃
- Fridge of Freezer Convert: 3 ℃

NOTE

The optimal temperature setting of each compartment depends on the ambient temperature. Above optimal temperature is based on the ambient temperature of 25 ℃.

Power Cool

Power Cool speeds up the cooling process at maximum fan speed. The fridge keeps running at full speed for two and a half hours and then returns to the previous temperature.

Power Freeze

Power Freeze speeds up the freezing process at maximum fan speed. The freezer keeps running at full speed for 50 hours and then returns to the previous temperature. To freeze large amounts of food, activate Power Freeze for at least 20 hours before putting food in the freezer.

NOTE

When you use this function the energy consumption of the refrigerator will increase. Remember to turn it off when you don't need it and return the freezer to your original temperature setting.

How to store for best preservation (applicable models only)

Cover foods to retain moisture and prevent them from picking up odors from other foods. A large pot of food like soup or stew should be divided into small portions and put in shallow containers before being refrigerated. A large cut of meat or whole poultry should be divided into smaller pieces or placed in shallow containers before refrigerating.

Placement of Foods

Shelves	Shelves should be adjustable to accommodate a variety of packages.
Specialized compartment (applicable models only)	Sealed crisper drawers provide an optimal storage environment for fruits and vegetables. Vegetables require higher humidity conditions while fruits require lower humidity conditions. Crispers are equipped with controls devices to control the humidity level. (*Depending on model and options) An adjustable temperature meat drawer maximizes the storage time of meats and cheeses.
Stored on the door	Don't store perishable foods in the door. Eggs should be stored in the carton on a shelf. The temperature of the storage bins in the door fluctuate more than the temperature in the cabinet. Keep the door closed as much as possible.
Freezer Compartment	You can store frozen food, make ice cubes and freeze fresh food in the freezer compartment.

NOTE

Freeze fresh, undamaged food only. Keep food which is to be frozen away from food which is already frozen. To prevent food from losing its flavour or drying out, place in airtight containers.

Appendix

Refrigerator & Freezer Storage Chart

The freshness longevity depends on temperature and exposure to moisture. Since product dates aren't a guide for safe use of a product, consult this chart and follow these tips.

Milk products

Product	Refrigerator	Freezer
Milk	1 week	1 month
Butter	2 weeks	12 months
Ice cream	-	2-3 weeks
Natural cheese	1 month	4-6 months
Cream cheese	2 weeks	Not recommended
Yogurt	1 month	-

Meat

Product	Refrigerator	Freezer
Fresh roasts, steaks, chops	3-4 days	2-3 months
Fresh ground meat, stew meat	1-2 days	3-4 months
Bacon	7 days	1 month
Sausage, Raw from pork, beef, turkey	1-2 days	1-2 months

Poultry / Eggs

Product	Refrigerator	Freezer
Fresh poultry	2 days	6-8 months
Poultry salad	1 day	-
Eggs, Fresh in shell	2-4 weeks	Not recommended

Fish / Seafood

Product	Refrigerator	Freezer
Fresh fish	1-2 days	3-6 months
Cooked fish	3-4 days	1 month
Fish salad	1 day	Not recommended
Dried or pickled fish	3-4 weeks	-

Fruits

Product	Refrigerator	Freezer
Apples	1 month	-
Peaches	2-3 weeks	-
Pineapple	1 week	-
Other fresh fruit	3-5 days	9-12 months

Vegetables

Product	Refrigerator	Freezer
Asparagus	2-3 days	-
Broccoli, Brussels sprouts, green peas, mushrooms	3-5 days	-
Cabbage, cauliflower, celery, cucumbers, lettuce	1 week	-
Carrots, beets, radishes	2 weeks	-

Appendix

Information for model and ordering spare parts

Model information

To access energy labelling information about this product on the European Product Registry for Energy Labelling (EPREL), scan QR-Code on the energy label.

You can find QR-Code on the energy label in your product box.

Part information

- The minimum period during which spare parts, necessary for the repair of the appliance, are available
  - 7 Years thermostats, temperature sensors, printed circuit boards and light sources, door handles, door hinges, trays, baskets (boxes or drawers)
  - 10 Years door gaskets
- The minimum duration of the guarantee of the refrigerating appliance offered by the manufacturer 24 Months.
- Relevant information for ordering spare parts, directly or through other channels provided by the manufacturer, importer or authorized representative
- You can find professional repair information on http://samsung.com/support.
  You can find user servicing manual on http://samsung.com/support.

Memo

Memo

Memo

SAMSUNG

NOTE (For Wi-Fi models only)

Hereby, Samsung declares that this radio equipment is in compliance with Directive 2014/53/EU and with the relevant statutory requirements in the UK.

The full text of the EU declaration of conformity and the UK declaration of conformity is available at the following internet address: The official Declaration of conformity may be found at http://www.samsung.com, go to Support > Search Product Support and enter the model name.

	Frequency range	Transmitter power (Max)
Wi-Fi	2412 - 2472 MHz	20 dBm
Bluetooth	2402 - 2480 MHz	20 dBm

UK	0333 000 0333	www.samsung.com/uk/support
IRELAND (EIRE)	0818 717100	www.samsung.com/ie/support
SOUTH AFRICA	0860 SAMSUNG (726 7864) WhatsApp +27 83 726 7864 	www.samsung.com/za/support
NAMIBIA	08 197 267 864	www.samsung.com/africa_en/support
MAURITIUS	800 5050 WhatsApp +230-5801-5050 	www.samsung.com/africa_en/support
REUNION	0262 50 88 80	www.samsung.com/africa_fr/support
MOZAMBIQUE	84 726 7864	www.samsung.com/africa_pt/support