FOSTER

The Refrigeration Experts

Service Manual

ECOPRO G3

Cabinets

EP700H, EP700M, EP700L, EP700G, EP700F, EP700SH, EP700SL, EP700P, EP1440H, EP1440M, EP1440L, EP1440G, EP700HH, EP700HL, EP700LL, EP700H2, EP700L2, EP700LL

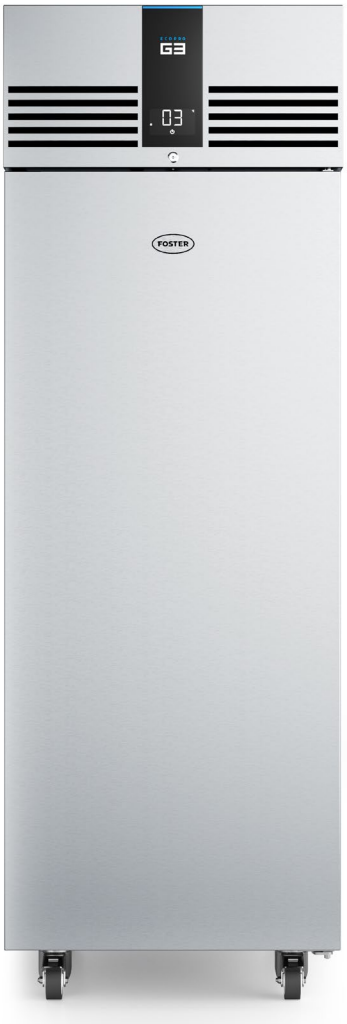



Three Steps

to maintain and service your appliance

The Refrigeration Experts

Welcome to your **interactive**
Foster service manual.

Here's how it works:

To return to the contents
at any point, click on the Foster
logo at the bottom of every page.

1

Operating Instructions



2

Service Function

- Parameters
- Alarm Indicators
- Probe Data
- Relay Test
- Factory Reset
- Wiring Diagrams



3

Maintenance

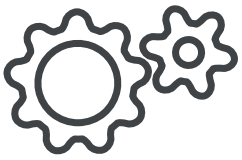

General Information

All installations must conform to local and municipal regulations and directives. In the case of doubt contact a Foster authorised dealer or the Foster Technical Department. The information contained in this manual is current at the time of publication and is subject to change without notice.

Climate Class

Climate class indicated on the serial plate shows the ambient temperature & humidity at which this appliance has been tested, for the purposes of establishing values in line with European standards.

Climate Class	Temperature	Relative humidity
4	30˚C	55%
5	40˚C	40%

General Safety

- Do not store explosive substances such as aerosol cans with a flammable propellant in this appliance.
- Keep all ventilation openings in the appliance or in the structure of a built in unit clear of any obstructions.
- Do not use electrical appliances inside the storage compartment.
- Do not use steam cleaners, pressure washers or other jets/sprays of water on or around the appliance.
- The appliance is air tight when the door is closed therefore under no circumstances should any living body be stored or 'locked in' the appliance.
- This appliance is heavy. When moving the appliance care should be taken and correct safe practices followed. The appliance should not be moved over uneven surfaces.
- The emitted sound level of this appliance is not greater than 70dB(A).
- To ensure stability the appliance should be located on a flat, level surface, correctly loaded.
- Do not use mechanical devices to accelerate the defrost process.
- Care should be taken not to damage the refrigeration circuit and/or system.
- If the supply cord is damaged, it must be replaced by the manufacturer, it's service agent or similarly qualified persons in order to avoid hazards.
- Care should be taken to avoid prolonged contact with cold surfaces with unprotected body parts, correct PPE to be used at all time.



Disposal Requirements

This appliance contains components and materials which can be harmful to the environment if not disposed of correctly. Disposal of this appliance should be carried out by a suitably licensed waste contractor in accordance with national laws and regulations which may be in force at the time.



Electrical Safety

Foster Refrigerator recommends that the equipment is electrically connected via a Residual Current Device; such as a Residual Current Circuit Breaker (RCCB) type socket, or through a Residual Current Circuit Breaker with Overload Protection (RCBO) supplied circuit.



Locating the appliance

After unpacking, clean (cleaning directions supplied within this manual) and allow the appliance to stand for 60 minutes before turning on.

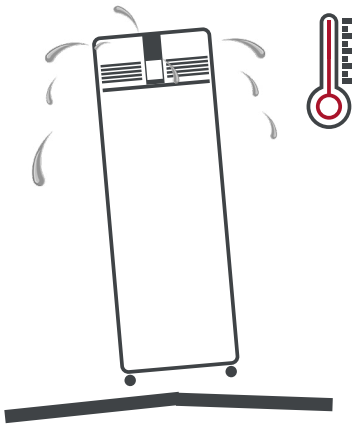

Ensure the appliance is situated on a firm, level surface, away from both hot and cold air sources, as this will affect its performance.

Place the appliance in a location so as not to exceed the maximum rated ambient temperature.

The appliance produces warm air when operating normally and requires adequate ventilation. The dimensions indicated are a minimum.

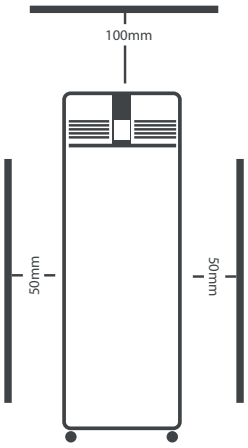

Connect the appliance to a suitable power supply. Do not connect or disconnect the appliance with wet hands. The appliance will turn on automatically displaying the actual internal temperature of the appliance. If this does not happen and button 3 is 'pulsing' press and hold button 3 for 3 seconds to turn on the appliance.

As the operating temperature has been pre-set no adjustments are required. Allow the appliance to reach its normal operating temperature before loading with product.

1 Operating Instructions

Display Icons and Buttons

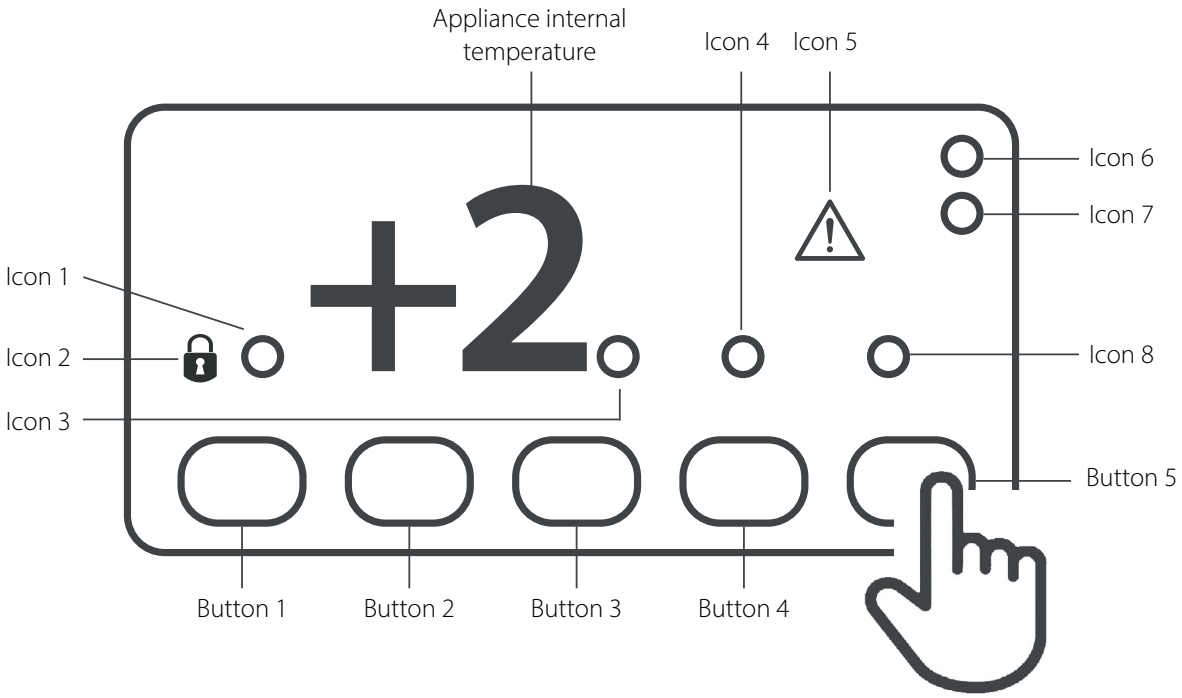

Icon		Button	
1	Compressor running	1	Information menu
2	Keypad locked	2	Increase value
3	Evaporator fans running	3	Standby/Exit/Confirm
4	Defrost in progress	4	Decrease value
5	Alarm	5	Light (If fitted)
6/7	Display units Centigrade or Fahrenheit		
8	Auxillary output operation		

Note - Buttons 1, 2, 4 and 5 are only visible after pressing button 3

Standby

Pressing button 3 for 3 seconds will turn the unit on or into standby. When in standby, only button 3 will be displayed. The remainder of the display will be blank. When operating normally, the display will show the internal temperature and button 3.

Set Point

To display the appliance Set Point, with the display showing the temperature, press button 3. Then press button 1 and with the display showing 'SP' press button 3.

To amend the Set Point press button 3. Then press button 1 and with the display showing 'SP' press button 3. Adjust using button 2 and button 4. Press button 3 to save the new value. If button 3 is not pressed the new value will not be stored.

If the Set Point cannot be adjusted to the value required please contact your authorised Foster dealer for advice.

The display will reset after 30 seconds or by pressing button 1.

Keypad Security Settings

We advise that this function is used to prevent unauthorised adjustment of the appliance and it's operating temperature.

Press and release button 3. Then press button 1 followed by button 4 to display 'Loc'. Press button 3 and use buttons 2 and 4 to change the value to 'Yes' to lock the keypad or 'no' to unlock it. Press button 3 to save the new value. If button 3 is not pressed the new value will not be stored.

The display will reset after 30 seconds or by pressing button 1.

Defrost



The appliance has an automatic defrost function and will defrost periodically each day without any user intervention. This process is normal and does not affect product stored in the appliance. During defrost the appliance can be used as normal.

Shelves, Supports, Loading and Air Flow



The appliance is supplied with adjustable, removable trayslides and shelves.

Each shelf is capable of holding up to 40kg of product evenly distributed.

Do not block air vents with product. A minimum of 25mm should be maintained between the top of the product and the shelf above.

Do not place product on the base of the appliance. If it is required to store product on the base of the appliance please contact the Foster parts team to purchase the necessary shelf and spacers.

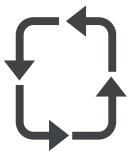

Always ensure air can circulate around/through the stored product. It is important that for optimal energy performance that adequate airflow is maintained around the perimeter of the shelves, and around all stored products.

Door Lock



To lock the door insert the key and turn 90°, turn in the opposite direction to unlock.

Internal Light (Applicable to model EP700G and EP1440G)



The light is operated using button 5. Press once to turn on the light and press again to turn off the light.

2 Service Function



Controller Menu's

The controller contains 2 menu levels, user level and service level.

User Level Menu

To access user level settings, press button 3 and then press button 1. The display will show 'SP'. Use buttons 2 and 4 to display the parameter required. Press button 3 to display the current value. If it is required to amend the value use buttons 2 and 4 followed by button 3 to save the new value.

User Level Parameters

Mnemonic	Description
SP	Appliance Set Point
Loc	Keypad Lock
tA	Actual air probe value
tE	Actual evaporator probe value (Not enabled on all models)
tLo	Minimum air temperature during previous 24 hours
tHi	Maximum air temperature during previous 24 hours
dEF	Time until next scheduled defrost. Displayed in tenths of hours. For example 05.4 = 5 hours 40 minutes
tdy	Display resolution

Service Level Menu

To access service level menu, press button 3 then press and hold buttons 2 and 4 for 5 seconds and the display will show 'MDL'. Press button 3 to display the current value. If it is required to amend the value use buttons 2 and 4 followed by button 3 to save the new value.

Service Level Parameters

Mnemomic	Description	
MDL	Do not adjust	
SPL	Minimum limit for SetPoint setting	
SPH	Maximum limit for SetPoint setting	
SP	Setpoint	Temperature value to be maintained in the product
HY0	Thermostat OFF -> ON differential	In Cooling Mode - 'MDL' = 'HYS'
HY1	Do not adjust	
CMD	Compressor start delay 'run' mode	The time between mains power being applied and the compressor starting when in 'run' mode (i.e. following a mains power cut)
CRT	Compressor rest time	Minimum time compressor is switched off following cycle operation (i.e. pull down, hot gas defrost)
CT1	Compressor output on time	Followed by 'CT2' when probe Ta (T1) is faulty
CT2	Compressor output off time	Followed by 'CT1' when probe Ta (T1) is faulty
PB	Do not adjust	
IT	Do not adjust	
DT	Do not adjust	
CT	Do not adjust	
AR	Do not adjust	
CMS	Do not adjust	
CRS	Do not adjust	
CRD	Do not adjust	
CDS	Do not adjust	
CFF	Do not adjust	
CSS	Do not adjust	
CSO	Do not adjust	
CST	Do not adjust	
DFM	Defrost start mode Defrost start mode	'NON' - defrost function is disabled - no defrosts will occur
		'TIM' - Time. Defrosting occurs on a time base determined by 'DFT', accumulated only in run mode
		'FRO' - Do not use
		'DoD' - Do not use
		'TAD' - Do not use
DFT	Time interval between defrosts	When this time has elapsed since the previous defrost (in run mode), a new defrost cycle is initiated
DSP	Do not adjust	
DST	Do not adjust	
DMI	Do not adjust	
DLI	Defrost end temperature	
DTO	Maximum defrost duration	
DTY	Defrost type	'OFF' - Off cycle defrost (Compressor and Heater OFF)
		'ELE' - Electric defrost (Compressor OFF and Heater ON)
		'GAS ' - Hot gas defrost (Compressor and Heater ON)
DSY	Defrost start synchronization	'OFF' - none. The defrost will occur without delay
		'LO' - defrost start will be postponed to compressor cut-out (SOD = max delay)
		HI' - defrost start will be postponed to compressor cut-in (SOD = max delay)
SOD	Do not adjust	
DPD	Evaporator pump down	At the beginning of defrost, defrost outputs (determined by 'DTY') are 'OFF' for 'DPD' seconds
DRN	Pause after defrost (evaporator drain down time)	
DDM	Defrost display mode.	RT' - the real / actual temperature
		LT' - the last temperature displayed before defrost initiation
		SP' - the setpoint value
		dEF' - 'dEF'

DDY	Display delay	The display shows the information selected with parameter 'DDM' during defrost and for 'DDY' minutes after defrost termination
FID	Evaporator Fans in defrost	YES - Fans active during defrost and drain ('DRN') and recovery / NO - Fans off during defrost and drain ('DRN') and recovery (fan start based on 'FDD' or 'FTO' - whichever first)
FDD	Evaporator fan re-start temperature after defrost	
FTO	Maximum evaporator fan stop after defrost	
FSD	'Evaporator fan stop delay after door opens	Time in seconds: '-1' = fan(s) do not stop / '0' = fan(s) stop instantaneously / '1'-'900' = fans stop after prescribed time elapses
FCM	Thermostatic control fan mode	'NON' - The fans remain ON all the time (subject to door switch operation and defrosts).
		'TMP' - Temperature-based control. The fans are ON when the compressor is ON. When the compressor is turned OFF, the fans remain ON as long as the temperature difference Te-Ta is greater than 'FDT'
		TIM' - Timed-based control. The fans are ON when the compressor is ON. When the compressor is OFF, the fans switch ON and OFF according to parameters 'FT1', 'FT2' and 'FT3'
FDT	Evaporator fan compressor stop over-run	Where Evaporator (Te) -Air (Ta) temperature difference for the fans to turn OFF after the compressor has stopped
FDH	Temperature differential for fan re-start	Example: 'FDT' = '-1' and 'FDH=3'. If compressor is stopped, the fans are OFF when Te> Ta '-1' ('FDT'), whereas the fans are ON when Te < Ta '-4' ('FDT'-'FDH')
FT1	Fan stop delay after compressor stop	
FT2	Timed fan stop	When 'FT2' = '0' the fans remain on all the time
FT3	Timed fan run	When 'FT3' = '0', and 'FT2' > '0', the fans remain OFF all the time
ATM	Alarm threshold management	'NON' - all temperature alarms are inhibited (the following parameter will be 'ACC')
		'ABS' - the values programmed in 'ALA' and 'AHA' represent the real alarm thresholds
		'REL' - the alarm threshold is obtained by the sum of setpoint, thermostat differential and 'ALR' / 'AHR'
ALA	Low temperature alarm threshold	
AHA	High temperature alarm threshold	
ALR	Low temperature alarm differential	With 'ALR' = '0' the low temperature alarm is excluded
AHR	High temperature alarm differential	With 'AHR' = '0' the high temperature alarm is excluded
ATI	Probe used for temperature alarm detection	
PAD	Delay before alarm temperature warning at power on	
ATD	Delay before alarm temperature warning	
ACC	Condenser periodic cleaning	When the compressor operation time, expressed in weeks, matches the 'ACC' value programmed, 'CL' flashes in the display. With 'ACC' = '0' the condenser cleaning warning is disabled
ECO	Do not adjust	
ESP	Do not adjust	
EH0	Do not adjust	
EH1	Do not adjust	
EPB	Do not adjust	
EDM	Do not adjust	
EDF	Do not adjust	
EDL	Do not adjust	
EDO	Do not adjust	
EDR	Do not adjust	
EFD	Do not adjust	
EFT	Do not adjust	
EFC	Do not adjust	
ESD	Do not adjust	
EFS	Do not adjust	
EMF	Do not adjust	
DSM	Door switch mode	'NON' - when 'DI1'/'T3A' = 'DOR' there is no response to a state change
		'ALR' - when 'DI1'/'T3A' = 'DOR' and the digital input is ON, an alarm is generated after 'DAD' minutes
		'STP' - when 'DI1'/'T3A' = 'DOR" and the digital input is ON, in addition to the alarm, the fans are stopped according to FSD and the compressor is stopped after 'CSD' seconds

DAD	Delay before door open alarm warning	
CSD	'Relay 1' stop delay after door open	'0' … '900' - time in seconds ('-1' = 'Relay' does not de-energise / '0' = instantaneous / '1'-'900' = de-energises after prescribed time elapses)
DOT	Door stop overide	If the door switch remains open for longer than 'DOT' minutes, the operating functionaity returns to normal thermostatic control, howver the alarm will remain. When 'DOT' = '0', this function is disabled
DI1	'DI1' digital input	'NON' - Digital Input 1 not active
		'DOR' - door input
		'ALR' - when the input is activated (set by 'D1A') alarm 'Alr' alarm is generated, the compressor is stopped and the defrosts are suspended
		'ECO' - Do not use
		'RDS' - Do not use
D1A	'DI1' activation	'OPN' - on open
		'CLS' - on close
LCM	Light control mode	'NON' - light output not controlled
		MAN' - light output controlled through display operating button (when 'SR1', 'SR2' or 'RL2' = 'LGT')
		'ECO' - Do not use
		'DI1' - Do not use
		'NI1' - Do not use
		'DI2' - Do not use
		'NI2' - Do not use
SR1	SSR1 output operation	'NON' - Relay output disabled (always Off/Open)
		'LGT' - Output enabled for light control
		'0-1' - Relay contacts follow the on/standby state of controller
		R1' - Do not use
		'R1F' - Do not use
		'-R1' - Do not use
		'FAN' - Output enabled for evaporator fan switching
		'-FAN' Do not use
		'DEF' - Output enabled for defrost switching
		'-DEF' - Do not use
		'ALO' - Contacts open when an alarm condition occurs
		'ALC' - Contacts make when an alarm condition occurs
		'ACP' - Do not use
		'AFH' - Do not use
SR2	SSR2 output operation	Same operations and selection as 'SR1'
RL2	RL2 output operation - same operations and selection as 'SR1'	Same operations and selection as 'SR1'
ACN	Do not adjust	
ACF	Do not adjust	
AHS	Do not adjust	
AHU	Do not adjust	
AFT	Do not adjust	
PMD	Do not adjust	
MSV	Do not adjust	
2CD	Do not adjust	
SB	Stand-by button enabling	
BOS	Button Operation Sounder	YES' provides positive feedback (i.e. 'beep') every time a display button is pressed, 'NO' sounder is silenced during display button operation
RHC	Do not adjust	
OSA	Probe TAir (T1) offset	
TE	Probe TEvaporator (T2) enabling	
OSE	Probe TEvaporator (T2) offset	
T3A	DI2 / TAuxiliary Probe Enabling and Operation	'NON' - DI2 / Auxiliary probe not fitted
		'DSP' - Auxiliary Probe - general purpose temperature measurement (i.e. stored product temperature)
		'CND' - Condenser probe - if measure temperature exceeds value of 'AHT' controller will react as defined by 'AHM'
		'2EU' Do not use
		'DOR' - Digital Input 2 used for door switch operation
		'ALR' - Do not use
		'ECO' - Do not use
		'RDS' - Do not use

OS3	Auxiliary Probe 3 offset	
D3A	'DI3' activation	'OPN' - on open
		'CLS' - on close
AHM	Operation in alarm when 'T3A' = 'CND'	'NON' - Audible and visual alarm is inhibited
		'ALR' - when 'T3A' = 'CND' and temp. > 'AHT' condenser high temperature 'HC' alternates in the display and the alarm sounder is activated
		'STP' - in addition to the alarm signal, the compressor is stopped and defrosts are suspended
AHT	Condenser temperature alarm (referring to TAuxiliary probe)	
TLD	Delay for minimum temperature ('TLO') and maximum temperature ('THI') logging	With 'TLD' = '0' the logging is disabled
TDS	The temperature probe value to be displayed	'TA' - actual Tair (T1) value
		TAS' - actual Tair (T1) value slowed (rate of change toward setpoint = actual value, away from setpoint = mathematical algorithm applied)
		'A-E' - the AVG-weighted average between TAir (T1) and TEvaporator (T2) probes
		'T3' - TAuxiliary (T3) probe value (when 'T3A' = 'DSP', 'CND' or '2EU')
SIM	Display slowdown.	Active when 'TDS' = 'TAS', the SIM value is the controlling arithmetical value.
AVG	The relative weight of T2 in respect of T1 (when 'TDS' = 'A-E')	
SCL	Readout scale	'°C' with non adjustable resolution in User Function Menu
		'°C' with adjustable resolution in User Function Menu
		'°F' with non adjustable resolution in User Function Menu
		'°F' with adjustable resolution in User Function Menu
PRT	Modbus communication type	RTL or ASCII
ADR	FD1-19 address for PC communication	
RFP	Return to Factory Parameters.	Allow options through 'User Menu' to reset all controller parameters to factory production values where controller has been programmed by Foster

Parameter Settings

		INTEGRAL												REMOTE				
Mnemonic	Default	Single Section High Temperature Solid Door	Single Section High Temperature Solid Door (Pass Through)	Single Section High Temperature Glass Door	Single Section Meat Temperature Solid Door	Single Section Low Temperature Solid Door	Single Section Fish Temperature Solid Door	Single Section Dual Temperature Solid Door (Top Section)	Single Section Dual Temperature Solid Door (Bottom Section)	Double Section High Temperature Cabinet Solid Door	Double Section High Temperature Cabinet Glass Door	Double Section Meat Temperature Cabinet Solid Door	Double Section Low Temperature Cabinet Solid Door	Single Section High Temperature Solid Door	Single Section Low Temperature Solid Door	Double Section High Temperature Cabinet Solid Door	Double Section High Temperature Cabinet Glass Door	Double Section Low Temperature Cabinet Solid Door
MDL	HYS	HYS	HYS	HYS	HYS	HYS	HYS	HYS	HYS	HYS	HYS	HYS	HYS	HYS	HYS	HYS	HYS	HYS
SPL	-2	1	1	1	-2	-21	-2	1	-23	1	1	-2	-21	1	-21	1	1	-21
SPH	10	5	5	5	5	-15	5	5	-15	5	5	5	-15	5	-15	5	5	-15
SP	3.5	2	2	2	-2	-21	-1	2	-23	2	2	-2	-21	2	-21	2	2	-21
HY0	3	3	3	3	3	3	3	3	3	3	3	3	3	3	3	3	3	3
HY1	0	0	0	0	0	0	0	0	0	0	0	0	0	0	0	0	0	0
CMD	30	5	5	5	5	5	5	5	5	5	5	5	5	0	5	5	5	5
CRT	90	180	180	180	180	180	180	180	180	180	180	60	60	0	0	0	0	0
CT1	4	4	4	4	5	5	4	4	5	4	4	5	5	4	5	4	4	5
CT2	7	6	6	7	5	5	7	6	5	6	7	5	5	6	5	6	6	5
PB	7	5	5	5	5	5	5	5	5	5	5	5	5	5	5	5	5	5
IT	100	100	100	100	100	100	100	100	100	100	100	100	100	100	100	100	100	100
DT	0	6	6	6	6	6	6	6	6	6	6	6	6	6	6	6	6	6
CT	10	5	5	5	5	5	5	5	5	5	5	5	5	5	5	5	5	5
AR	75	70	70	70	70	70	70	70	70	70	70	70	70	70	70	70	70	70
CMS	100	100	100	100	100	100	100	100	100	100	100	100	100	100	100	100	100	100
CRS	35	90	90	90	90	90	90	90	90	90	90	90	90	90	90	90	90	90
CRD	15	10	10	10	10	10	10	10	10	10	10	10	10	10	10	10	10	10
CDS	50	60	60	60	60	60	60	60	60	60	60	60	60	60	60	60	60	60
CFF	60	60	60	60	60	60	60	60	60	60	60	60	60	60	60	60	60	60
CSS	60	60	60	60	60	60	60	60	60	60	60	60	60	60	60	60	60	60
CSO	1	12	12	12	12	12	12	12	12	12	12	12	12	12	12	12	12	12
CST	60	30	30	30	30	30	30	30	30	30	30	30	30	30	30	30	30	30
DFM	TAD	TIM	TIM	TIM	TIM	TIM	NON	TIM	TIM	TIM	TIM	TIM	TIM	TIM	TIM	TIM	TIM	TIM
DFT	6	6	6	6	6	6	6	6	6	6	6	6	6	6	6	6	6	6
DSP	-12	-12	-12	-12	-12	-12	-12	-12	-12	-12	-12	-12	-12	-12	-12	-12	-12	-12
DST	4	15	15	15	15	15	15	15	15	15	15	15	15	15	15	15	15	15
DMI	2	2	2	2	2	2	2	2	2	2	2	2	2	2	2	2	2	2
DLI	10	10	10	6	15	15	6	10	15	10	10	15	15	10	15	6	10	15
DTO	20	15	15	15	20	20	15	15	20	15	15	20	20	15	20	15	15	20
DTY	OFF	OFF	OFF	OFF	GAS	GAS	OFF	OFF	GAS	OFF	OFF	GAS	GAS	OFF	ELE	OFF	OFF	ELE
DSY	OFF	OFF	OFF	OFF	HI	HI	OFF	OFF	HI	OFF	OFF	HI	HI	OFF	HI	OFF	OFF	HI
SOD	10	5	5	5	5	5	5	5	5	5	5	5	5	5	5	5	5	5
DPD	0	0	0	0	0	0	0	0	0	0	0	0	0	0	0	0	0	0
DRN	60	0	0	0	90	90	0	0	90	0	0	90	90	0	90	0	0	90

		INTEGRAL												REMOTE				
Mnemonic	Default	Single Section High Temperature Solid Door	Single Section High Temperature Solid Door (Pass Through)	Single Section High Temperature Glass Door	Single Section Meat Temperature Solid Door	Single Section Low Temperature Solid Door	Single Section Fish Temperature Solid Door	Single Section Dual Temperature Solid Door (Top Section)	Single Section Dual Temperature Solid Door (Bottom Section)	Double Section High Temperature Cabinet Solid Door	Double Section High Temperature Cabinet Glass Door	Double Section Meat Temperature Cabinet Solid Door	Double Section Low Temperature Cabinet Solid Door	Single Section High Temperature Solid Door	Single Section Low Temperature Solid Door	Double Section High Temperature Cabinet Solid Door	Double Section High Temperature Cabinet Glass Door	Double Section Low Temperature Cabinet Solid Door
DDM	DEF	SP	SP	SP	SP	SP	DEF	SP	SP	SP	SP	SP	SP	SP	SP	SP	SP	SP
DDY	2	1	1	2	1	1	2	1	2	1	1	1	1	1	2	1	1	2
FID	YES	YES	YES	YES	NO	NO	YES	YES	NO	YES	YES	NO	NO	YES	NO	YES	YES	NO
FDD	10	10	10	10	-5	-5	10	10	-5	10	10	-5	-5	10	-5	10	10	-5
FTO	1	1	1	1	1	1	1	1	1	1	1	1	1	1	1	1	1	1
FSD	0	0	0	0	0	0	0	0	0	0	0	0	0	0	0	0	0	0
FCM	TMP	NON	NON	NON	NON	NON	NON	NON	NON	NON	NON	NON	NON	NON	NON	NON	NON	NON
FDT	-3	0	0	0	0	0	0	0	0	0	0	0	0	0	0	0	0	0
FDH	2	1	1	1	1	1	1	1	1	1	1	1	1	1	1	1	1	1
FT1	0	0	0	0	0	0	0	0	0	0	0	0	0	0	0	0	0	0
FT2	0	0	0	0	0	0	0	0	0	0	0	0	0	0	0	0	0	0
FT3	0	0	0	0	0	0	0	0	0	0	0	0	0	0	0	0	0	0
ATM	REL	REL	REL	REL	REL	REL	REL	REL	REL	REL	REL	REL	REL	REL	REL	REL	REL	REL
ALA	-30	-30	-30	-30	-30	-30	-30	-30	-30	-30	-30	-30	-30	-30	-30	-30	-30	-30
AHA	-15	-15	-15	-15	-15	-15	-15	-15	-15	-15	-15	-15	-15	-15	-15	-15	-15	-15
ALR	-5	-3	-3	-3	-3	-3	-3	-3	-3	-3	-3	-3	-3	-3	-3	-3	-3	-3
AHR	8	6	6	6	8	8	6	6	8	6	6	8	8	6	8	6	6	8
ATI	T1	T1	T1	T1	T1	T1	T1	T1	T1	T1	T1	T1	T1	T1	T1	T1	T1	T1
PAD	60	60	60	60	60	60	60	60	60	60	60	60	60	60	60	60	60	60
ATD	90	60	60	60	60	60	60	60	60	60	60	60	60	60	60	60	60	60
ACC	0	0	0	0	0	0	0	0	0	0	0	0	0	0	0	0	0	0
ECO	YES	NO	NO	NO	NO	NO	NO	NO	NO	NO	NO	NO	NO	NO	NO	NO	NO	NO
ESP	3.5	3.5	3.5	3.5	3.5	3.5	3.5	3.5	3.5	3.5	3.5	3.5	3.5	3.5	3.5	3.5	3.5	3.5
EH0	2.5	3	3	3	3	3	3	3	3	3	3	3	3	3	3	3	3	3
EH1	0	0	0	0	0	0	0	0	0	0	0	0	0	0	0	0	0	0
EPB	10	4	4	4	4	4	4	4	4	4	4	4	4	4	4	4	4	4
EDM	TAD	TIM	TIM	TIM	TIM	TIM	TIM	TIM	TIM	TIM	TIM	TIM	TIM	TIM	TIM	TIM	TIM	TIM
EDF	24	12	12	12	12	12	12	12	12	12	12	12	12	12	12	12	12	12
EDL	10	6	6	6	6	6	6	6	6	6	6	6	6	6	6	6	6	6
EDO	10	15	15	15	15	15	15	15	15	15	15	15	15	15	15	15	15	15
EDR	20	0	0	0	0	0	0	0	0	0	0	0	0	0	0	0	0	0
EFD	10	10	10	10	10	10	10	10	10	10	10	10	10	10	10	10	10	10
EFT	5	1	1	1	1	1	1	1	1	1	1	1	1	1	1	1	1	1
EFC	NON	NON	NON	NON	NON	NON	NON	NON	NON	NON	NON	NON	NON	NON	NON	NON	NON	NON
ESD	90	60	60	60	60	60	60	60	60	60	60	60	60	60	60	60	60	60
EFS	12	15	15	15	15	15	15	15	15	15	15	15	15	15	15	15	15	15
EMF	20	30	30	30	30	30	30	30	30	30	30	30	30	30	30	30	30	30
DSM	ALR	STP	STP	STP	STP	STP	STP	STP	STP	STP	STP	STP	STP	STP	STP	STP	STP	STP

		INTEGRAL												REMOTE				
Mnemonic	Default	Single Section High Temperature Solid Door	Single Section High Temperature Solid Door (Pass Through)	Single Section High Temperature Glass Door	Single Section Meat Temperature Solid Door	Single Section Low Temperature Solid Door	Single Section Fish Temperature Solid Door	Single Section Dual Temperature Solid Door (Top Section)	Single Section Dual Temperature Solid Door (Bottom Section)	Double Section High Temperature Cabinet Solid Door	Double Section High Temperature Cabinet Glass Door	Double Section Meat Temperature Cabinet Solid Door	Double Section Low Temperature Cabinet Solid Door	Single Section High Temperature Solid Door	Single Section Low Temperature Solid Door	Double Section High Temperature Cabinet Solid Door	Double Section High Temperature Cabinet Glass Door	Double Section Low Temperature Cabinet Solid Door
DAD	2	2	2	2	2	2	2	2	2	2	2	2	2	2	2	2	2	2
CSD	90	30	30	30	30	30	30	30	30	30	30	30	30	30	30	30	30	30
DOT	2	4	4	4	4	4	4	4	4	4	4	4	4	4	4	4	4	4
DI1	DOR	DOR	DOR	DOR	DOR	DOR	DOR	DOR	NON	DOR	DOR	DOR	DOR	DOR	DOR	DOR	DOR	DOR
D1A	OPN	OPN	OPN	OPN	OPN	OPN	OPN	OPN	OPN	OPN	OPN	OPN	OPN	OPN	OPN	OPN	OPN	OPN
LCM	NON	NON	NON	MAN	NON	NON	NON	NON	NON	NON	MAN	NON	NON	NON	NON	NON	MAN	NON
SR1	NON	FAN	FAN	FAN	FAN	FAN	NON	FAN	FAN	FAN	FAN	FAN	FAN	FAN	FAN	FAN	FAN	FAN
SR2	NON	NON	NON	LGT	DEF	DEF	NON	NON	DEF	NON	NON	DEF	DEF	NON	DEF	NON	NON	DEF
RL2	NON	0-1	0-1	0-1	0-1	0-1	0-1	0-1	0-1	0-1	LGT	0-1	0-1	0-1	0-1	0-1	LGT	0-1
ACN	0	0	0	0	0	0	0	0	0	0	0	0	0	0	0	0	0	0
ACF	0	0	0	0	0	0	0	0	0	0	0	0	0	0	0	0	0	0
AHS	YES	NO	NO	NO	NO	NO	NO	NO	NO	NO	NO	NO	NO	NO	NO	NO	NO	NO
AHU	15	15	15	15	15	15	15	15	15	15	15	15	15	15	15	15	15	15
AFT	15	15	15	15	15	15	15	15	15	15	15	15	15	15	15	15	15	15
PMD	NO	NO	NO	NO	NO	NO	NO	NO	NO	NO	NO	NO	NO	NO	NO	NO	NO	NO
MSV	230	240	240	240	240	240	240	240	240	240	240	240	240	240	240	240	240	240
2CD	0	0	0	0	0	0	0	0	0	0	0	0	0	0	0	0	0	0
SB	YES	YES	YES	YES	YES	YES	YES	YES	YES	YES	YES	YES	YES	YES	YES	YES	YES	YES
BOS	YES	YES	YES	YES	YES	YES	YES	YES	YES	YES	YES	YES	YES	YES	YES	YES	YES	YES
RHC	0	0	0	0	0	0	0	0	0	0	0	0	0	0	0	0	0	0
OSA	0	0	0	0	0	0	0	0	1	0	0	0	0	0	0	0	0	0
TE	NO	NO	NO	NO	YES	YES	NO	NO	YES	NO	NO	YES	YES	NO	YES	NO	NO	YES
OSE	0	0	0	0	0	0	0	0	0	0	0	0	0	0	0	0	0	0
T3A	NON	NON	DOR	NON	NON	NON	NON	NON	NON	DOR	DOR	DOR	DOR	NON	NON	DOR	DOR	DOR
OS3	0	0	0	0	0	0	0	0	0	0	0	0	0	0	0	0	0	0
D3A	OPN	OPN	OPN	OPN	OPN	OPN	OPN	OPN	OPN	OPN	OPN	OPN	OPN	OPN	OPN	OPN	OPN	OPN
AHM	NON	NON	NON	NON	NON	NON	NON	NON	NON	NON	NON	NON	NON	NON	NON	NON	NON	NON
AHT	0	60	60	60	60	60	60	60	60	60	60	60	60	60	60	60	60	60
TLD	30	30	30	30	30	30	30	30	30	30	30	30	30	30	30	30	30	30
TDS	TAS	TAS	TAS	TAS	TAS	TAS	TAS	TAS	TAS	TAS	TAS	TAS	TAS	TAS	TAS	TAS	TAS	TAS
SIM	10	10	10	10	10	10	10	10	10	10	10	10	10	10	10	10	10	10
AVG	0	0	0	0	0	0	0	0	0	0	0	0	0	0	0	0	0	0
SCL	oCn	oCA	oCA	oCA	oCA	oCA	oCA	oCA	oCA	oCA	oCA	oCA	oCA	oCA	oCA	oCA	oCA	oCA
PRT	RTU	RTU	RTU	RTU	RTU	RTU	RTU	RTU	RTU	RTU	RTU	RTU	RTU	RTU	RTU	RTU	RTU	RTU
ADR	1	1	1	1	1	1	1	1	1	1	1	1	1	1	1	1	1	1
RFP	YES	YES	YES	YES	YES	YES	YES	YES	YES	YES	YES	YES	YES	YES	YES	YES	YES	YES

Other Information

Alarms/Warnings:

During operation the current temperature inside the appliance will be displayed. At certain times this will change to indicate a particular appliance operation or fault. The indicators you may see are as follows:

The temperature alarms are either relative to the set point or an absolute value. This is controlled by the value of parameter 'ATM'. Where the alarms are relative the low alarm is the set point minus parameter 'ALR' and the high alarm is the set point plus 'AHR'. When the temperature has been outside this value for the value of 'ATD' the relevant indicator will be displayed.

hi - The internal temperature of the appliance is higher than described above. Ensure that the door is closed and that the air flow inside is not obstructed by excesive or poor loading of product. The alarm will reset if the temperature falls to a normal level. If this does not happen please contact your authorised dealer or Foster Service.

Lo - The internal temperature of the appliance is lower than described above. Check to ensure that the appliance has not been loaded with product at a lower temperature than the normal appliance operating temperature. If this is not the case please call your authorised dealer or Foster Service.

dO - The appliance door is open. Close the door to cancel the alarm. Note - the door switch is a magnetic switch located in the bottom edge of the front cover. If the cover is hinged up or removed for access purposes the door switch will not function and the door open alarm will be displayed.

tA - Air probe has failed.. Call your authorised dealer or Foster Service to arrange for this to be replaced. During this time the appliance cannot maintain an accurate temperature and all product should be removed and the appliance switched off.

tE - Evaporator probe has failed (not applicable to all models). Call your authorised dealer of Foster Service to arrange for this to be replaced.

PF - The mains power has been removed from the appliance for a period of time and has now been restored. This may have resulted in a rise in appliance temperature. Caution should be taken when using products stored within to ascertain whether these products are suitable for use. Upon restoration of the power supply the appliance will resume normal operation and the PF can be cancelled by pressing button 3 once.

HC - The condenser temperature is higher than it should be. If the appliance is being subjected to particularly high ambient temperatures steps should be taken to reduce this. If the ambient temperature is not high or reducing the temperature does not rectify the fault please contact your authorised dealer or Foster Service.

Cnd - The condenser clean period has expired. Please contact your authorised dealer or Foster Service.

While in an alarm condition icon 5 will also be illuminated.

(Some indications are only visible periodically during specific appliance operations such as defrost or when activated through use of the appliance).

Probe Information

The probe is a type 10k NTC. The probes are identical in characteristics with the T1 and T2 identification markings and different colours being for ease of identification and not for functional reasons. Please refer to the image below for probe identification.

Probe Indentification

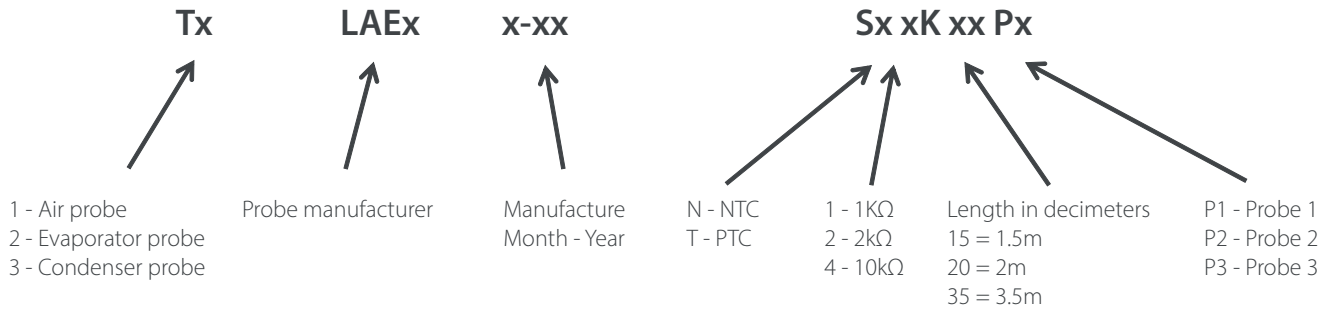

Probe Resistance

NTC10K Temperature Resistance Table **SN4K**

TEMP. (°C)	R-low (KW)	R-mid (KW)	R-high (KW)
-30	109.522	113.347	117.294
-25	84.823	87.559	90.374
-20	66.27	68.237	70.255
-15	52.229	53.65	55.104
-10	41.477	42.506	43.557
-5	33.147	33.892	34.651
0	26.678	27.219	27.767
5	21.63	22.021	22.417
10	17.643	17.926	18.21
15	14.472	14.674	14.877
20	11.938	12.081	12.224
25	9.9	10	10.1
30	8.217	8.315	8.413
35	6.854	6.948	7.043
40	5.745	5.834	5.923

Refrigerant Charge

The refrigerant charge weight can be found on the serial label within the appliance. Where this is not available please refer to the table below. The information below is correct time of printing but is subject to change without prior notice.

EP700H	80gms
EP700M	80gms
EP700L	80gms
EP700G	95gms
EP700F	80gms
EP700SH	80gms
EP700SL	80gms
EP700P	110gms
EP1440H	140gms
EP1440M	150gms
EP1440L	150gms
EP1440G	140gms
EP700HH	65gms per system
EP700HL	65gms per system
EP700LL	65gms per system
EP700H2	80gms per system
EP700L2	80gms per system
EP700LL	65gms per system

Evaporator Fan Motors

The appliance is fitted with 2 speed evaporator fan motor(s). It is important that they are wired correctly to ensure optimum cooling and energy performance from the appliance. High speed mode is active during compressor operation with low speed mode being active at all other times subject to the parameter 'FCM'.

Door Switch

The appliance is fitted with a magnetic door switch located in the underside of the front cover. Where the door switch is open and following the time set in parameter DAD, the controller will, indicate DO and an alarm will sound. At the point the door is opened the evaporator fan(s) will stop and following the time set in parameter CSD relay 1 will open until such time as the door is closed.

Defrost Indication

During defrost icon 4 will be illuminated. The controller display will be determined by the value set in parameter 'DDM'.

To start a defrost manually press and hold button 3 for 5 seconds. This will turn off the appliance. Continue to hold down button 3 after the appliance has turned off. After a further 2 seconds the display will indicate a defrost has commenced (icon 4 illuminated) and the button can be released. While the defrost function is operating the display will be determined by the value set in parameter DDM.

The defrost function will operate until either the time set in parameter DTO or the temperature set in parameter DLI is reached. Where parameter TE is set to NO defrost will function on a time basis only. Upon completion of the defrost cycle the appliance will resume normal operation with the current temperature displayed.

Relay Test

The controller contains a relay test function to enable the service engineer to operate individual relays, or a combination of relays for diagnostic purposes.

To access the relay test:

- Place the controller in standby so that button 3 is pulsing
- Press button 3 once so that buttons 1, 2 and 4 are activated and flashing
- Press and hold buttons 2 and 4 for 5 seconds until the display shows 'rLy' and buttons 1 to 5 are all illuminated

The controller is now in relay test mode.

To activate relay 1 press button 1. Icon 1 will illuminate. To deactivate relay 1 press button 1 again and icon 1 will switch off.
To activate relay 2 press button 2. Icon 3 will illuminate. To deactivate relay 2 press button 2 again and icon 3 will switch off.
To activate relay 3 press button 4. Icon 4 will illuminate. To deactivate relay 3 press button 4 again and icon 4 will switch off.
To activate relay 4 press button 5. Icon 8 will illuminate. To deactivate relay 4 press button 5 again and icon 8 will switch off.

Multiple relays can be activated simultaneously to enable diagnostics.

Relay function:

Relay 1 - Red icon - Compressor
Relay 2 - Green icon - function determined by parameter SR1. Evaporator Fan
Relay 3 - White icon - function determined by parameter SR2. Where appliance has active defrost SR2 to will be set to DEF for defrost.
Relay 4 - Amber icon - function determined by parameter RL2.

To exit the relay test function press button 3 once.

Factory Reset

Where the controller was originally programmed by Foster and is dedicated to a specific appliance type it is possible to return the setting to they're original programmed state. If the controller was not programmed by Foster this function will return the parameters to the values in the original factory settings.

To reset the parameters:

- Press button 3 to activate the display
- Press button 1 to enter the user level menu
- Press button 2 until the display shows 'rFp'
- Press button 3 once and 'rFp' will flash
- Press and hold button 3 for 3 seconds until the display shows 'End'

The original parameters as described above have now been restored.
If at any point the sequence of button operations and display indications are not completed the controller will, after 30 seconds resume operation with no changes to the parameters having been made.

3 Maintenance

Condenser Cleaning

The condenser is a Stayclear condenser which does not require cleaning as regularly as a traditional finned condenser may. Care should be taken when cleaning the condenser. Never use a wire brush, abrasive or corrosive materials to clean the condenser.

Door Gaskets

Door gaskets should be inspected periodically and cleaned where necessary with a warm damp cloth. Do not use aggressive cleaning materials on the door gaskets.

Where door gaskets are damaged or not sealing correctly, they are required to be changed. These can be removed by pulling the old gasket from it's locating profile and pushing the new gasket into the same location. Where the gasket will not locate securely in the locating profile use a rubber mallet to locate the gasket securely.

Wiring Diagrams

EP700H Integral Condensing Unit

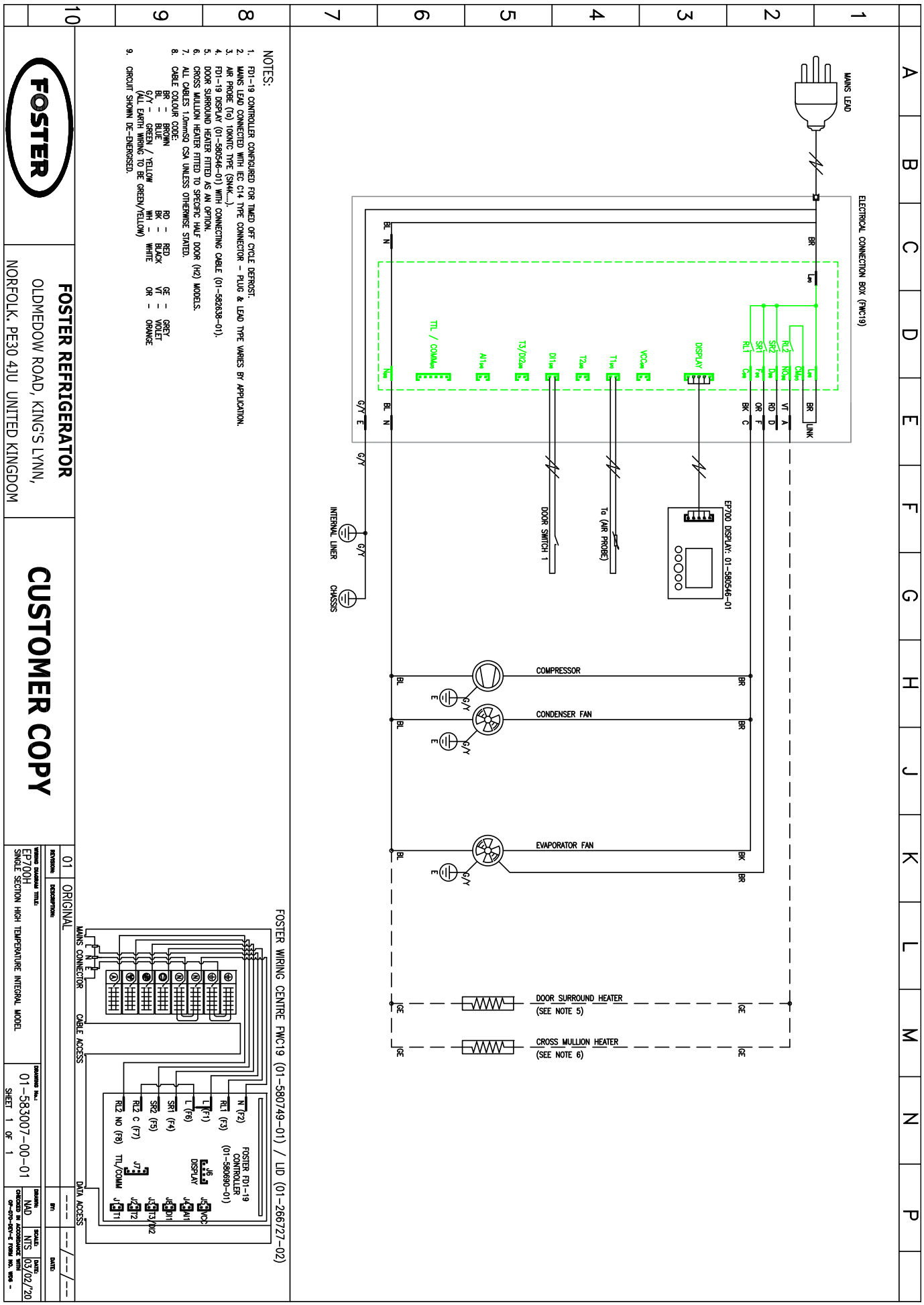

NOTES:

1. FD1-19 CONTROLLER CONFIGURED FOR TIMED OFF CYCLE DEFROST.
2. MAINS LEAD CONNECTED WITH IEC C14 TYPE CONNECTOR - PLUG & LEAD TYPE VARIES BY APPLICATION.
3. AIR PROBE (To) 10KNTC TYPE (SN4K....).
4. FD1-19 DISPLAY (01-580546-01) WITH CONNECTING CABLE (01-582638-01).
5. DOOR SURROUND HEATER FITTED AS AN OPTION.
6. CROSS MULLION HEATER FITTED TO SPECIFIC HALF DOOR (H2) MODELS.
7. ALL CABLES 1.0mmSQ CSA UNLESS OTHERWISE STATED.
8. CABLE COLOUR CODE:

BR	= BROWN	RD	= RED
BL	= BLUE	BK	= BLACK
G/Y	= GREEN / YELLOW (ALL EARTH WIRING TO BE GREEN/YELLOW)	WH	= WHITE
GE	= GREY		
VI	= VIOLET		
OR	= ORANGE		

9. CIRCUIT SHOWN DE-ENERGISED.

FOSTER REFRIGERATOR

OLDMEDOW ROAD, KING'S LYNN,
NORFOLK. PE30 4JU UNITED KINGDOM

CUSTOMER COPY

DRAWING TITLE:	EP700H SINGLE SECTION HIGH TEMPERATURE INTEGRAL MODEL
DRAWING No.:	01-583007-00-01
SHEET 1 OF 1	
REVISION:	01
DESCRIPTION:	ORIGINAL
BY:	---
DATE:	--/--/--
DRAWN:	NAD
CHECKED:	
SCALE:	NTS
DATE:	03/02/'20
ISSUED IN ACCORDANCE WITH QP-070-002V-E FORM NO. 1008 -	

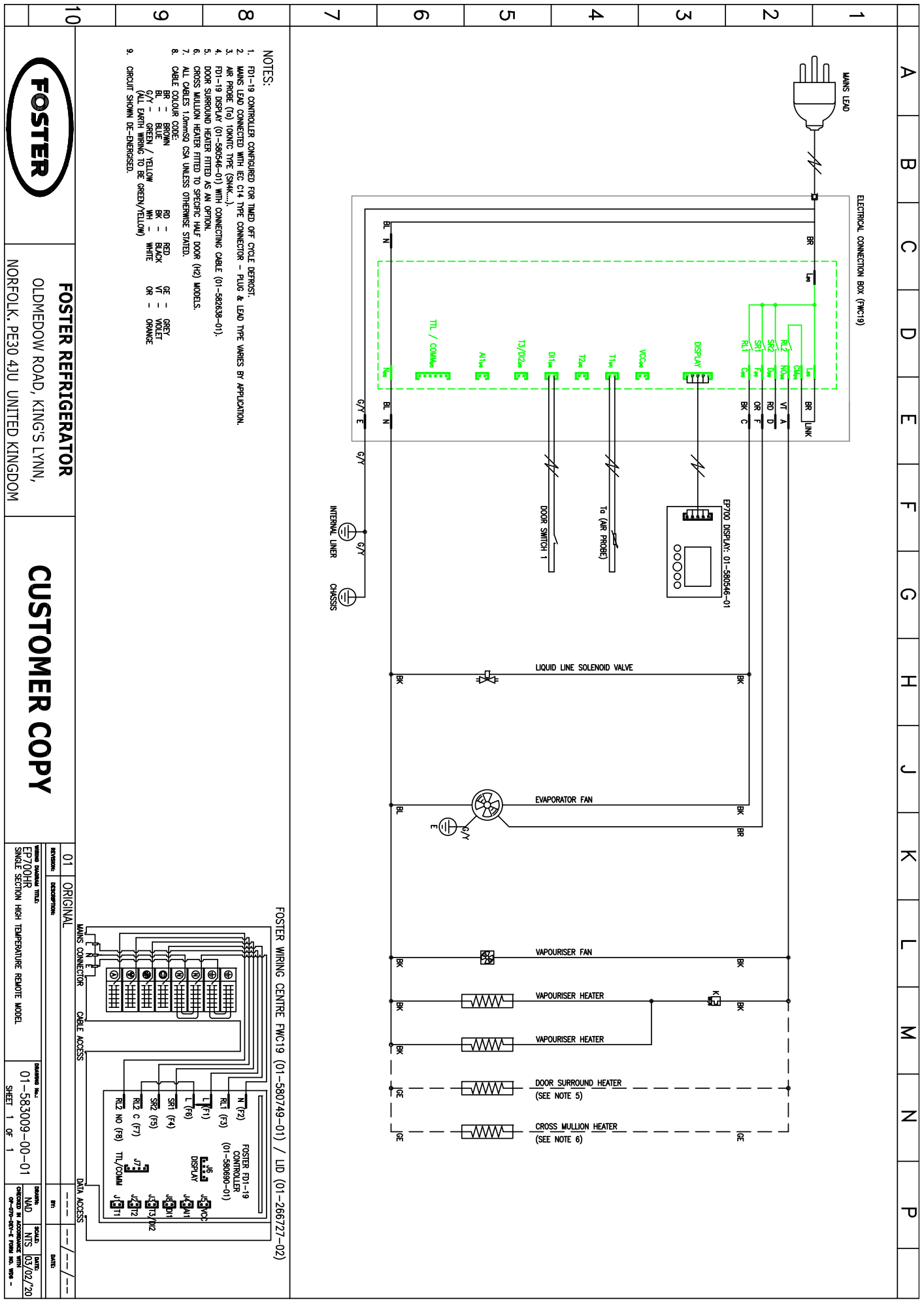

NOTES:

1. FD1-19 CONTROLLER CONFIGURED FOR TIMED OFF CYCLE DEFROST.
2. MAINS LEAD CONNECTED WITH IEC C14 TYPE CONNECTOR - PLUG & LEAD TYPE VARIES BY APPLICATION.
3. AIR PROBE (T1) 10KNTC TYPE (SN4K-...).
4. FD1-19 DISPLAY (01-580546-01) WITH CONNECTING CABLE (01-582638-01).
5. DOOR SURROUND HEATER FITTED AS AN OPTION.
6. CROSS MULLION HEATER FITTED TO SPECIFIC HALF DOOR (H2) MODELS.
7. ALL CABLES 1.0mmSQ CSA UNLESS OTHERWISE STATED.
8. CABLE COLOUR CODE:

BR	=	BROWN	RD	=	RED
BL	=	BLUE	BK	=	BLACK
G/Y	=	GREEN / YELLOW (ALL EARTH WIRING TO BE GREEN/YELLOW)	WH	=	WHITE
			GE	=	GREY
			VI	=	VIOLET
			OR	=	ORANGE

9. CIRCUIT SHOWN DE-ENERGISED.

FOSTER

FOSTER REFRIGERATOR

OLDMEDOW ROAD, KING'S LYNN,
NORFOLK. PE30 4JU UNITED KINGDOM

CUSTOMER COPY

REVISION:	DESCRIPTION:	BY:	DATE:
01	ORIGINAL	---	--/--/--

WIRING DIAGRAM TITLE:
EP700HR
SINGLE SECTION HIGH TEMPERATURE REMOTE MODEL

DRAWING No.:
01-583009-00-01
SHEET 1 OF 1

DRAWN: NAD
SCALE: NTS
DATE: 03/02/20
CHECKED IN ACCORDANCE WITH OP-079-REV-E FORM NO. WRK -

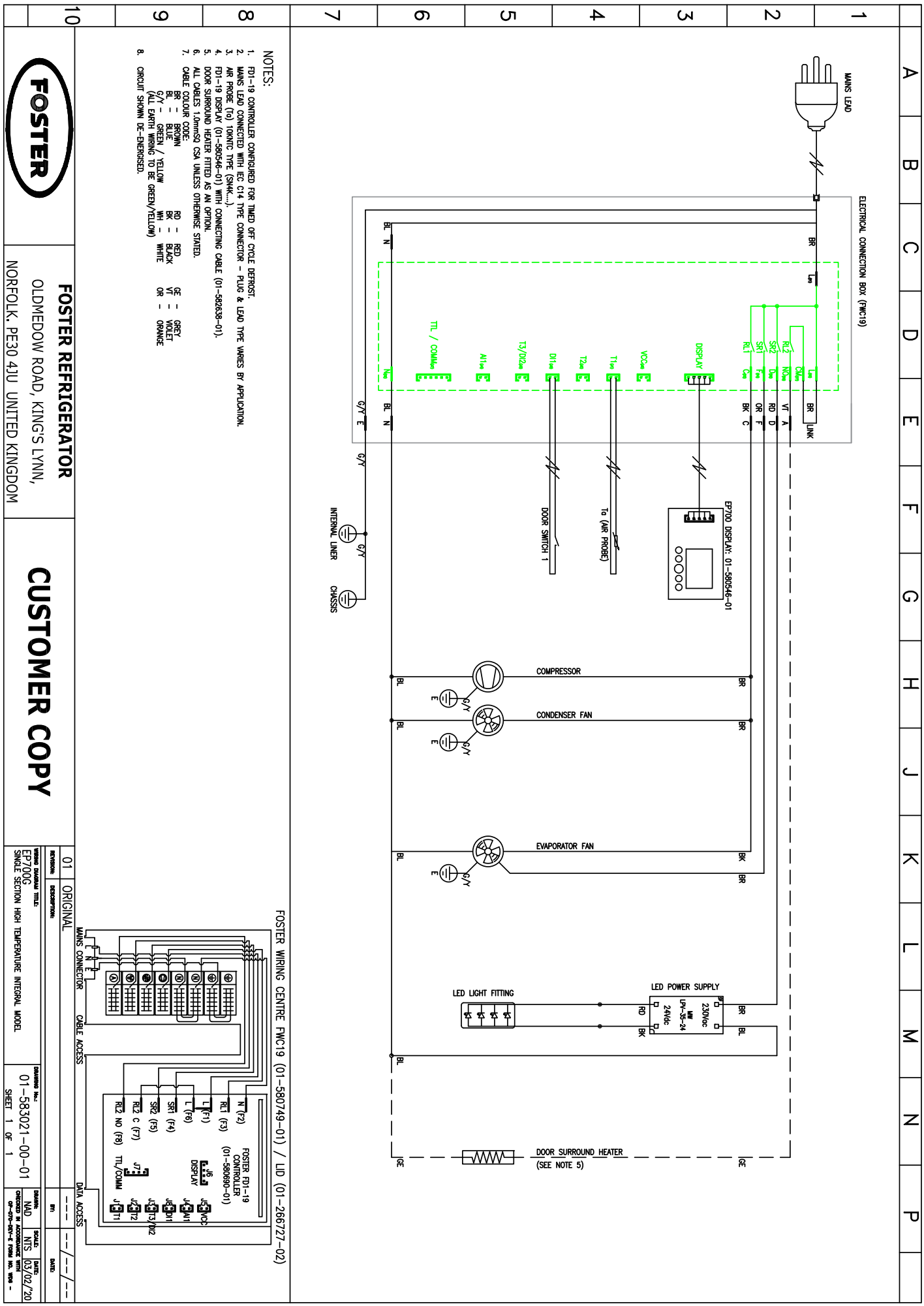
MAINS LEAD
ELECTRICAL CONNECTION BOX (FWC19)
DISPLAY
EP700 DISPLAY: 01-580546-01
To (AIR PROBE)
DOOR SWITCH 1
INTERNAL LINER
CHASSIS
COMPRESSOR
CONDENSER FAN
EVAPORATOR FAN
LED LIGHT FITTING
LED POWER SUPPLY
DOOR SURROUND HEATER
(SEE NOTE 5)
NOTES:
1. FD1-19 CONTROLLER CONFIGURED FOR TIMED OFF CYCLE DEFROST.
2. MAINS LEAD CONNECTED WITH IEC C14 TYPE CONNECTOR - PLUG & LEAD TYPE VARIES BY APPLICATION.
3. AIR PROBE (To) 10KNTC TYPE (SN4K-...).
4. FD1-19 DISPLAY (01-580546-01) WITH CONNECTING CABLE (01-582638-01).
5. DOOR SURROUND HEATER FITTED AS AN OPTION.
6. ALL CABLES 1.0mmSQ CSA UNLESS OTHERWISE STATED.
7. CABLE COLOUR CODE:
BR = BROWN
BL = BLUE
G/Y = GREEN / YELLOW
(ALL EARTH WIRING TO BE GREEN/YELLOW)
RD = RED
BK = BLACK
WH = WHITE
GE = GREY
VI = VIOLET
OR = ORANGE
8. CIRCUIT SHOWN DE-ENERGISED.
FOSTER WIRING CENTRE FWC19 (01-580749-01) / LID (01-266727-02)
MAINS CONNECTOR
CABLE ACCESS
FOSTER FD1-19 CONTROLLER (01-580690-01)
DISPLAY
TTL/COMM
DATA ACCESS
FOSTER REFRIGERATOR
OLDMEDOW ROAD, KING'S LYNN,
NORFOLK. PE30 4JU UNITED KINGDOM
CUSTOMER COPY
01 ORIGINAL
EP700G
SINGLE SECTION HIGH TEMPERATURE INTEGRAL MODEL
01-583021-00-01
SHEET 1 OF 1
NTS
03/02/'20

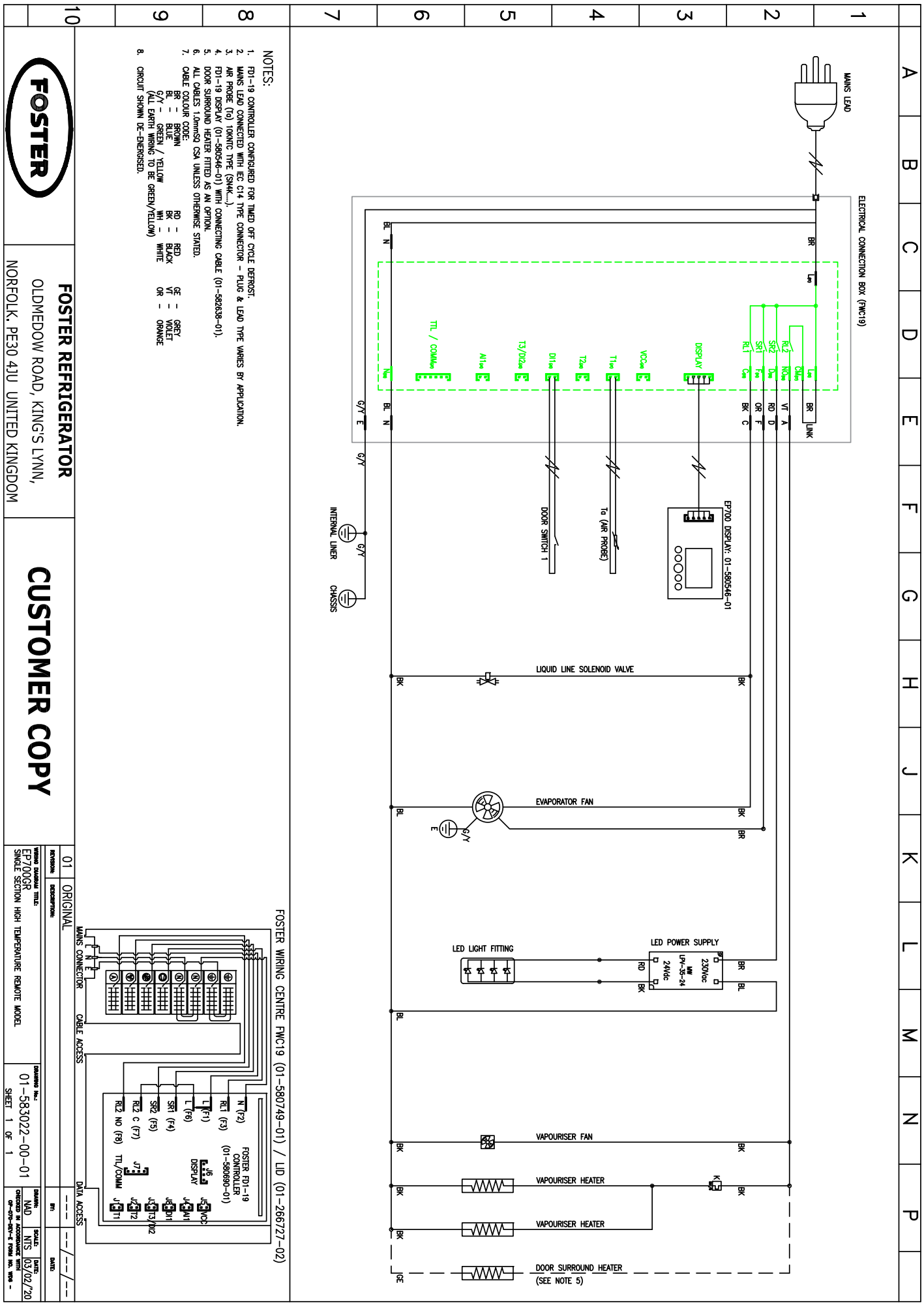
MAINS LEAD
ELECTRICAL CONNECTION BOX (FWC19)
DISPLAY
EP700 DISPLAY: 01-580546-01
DOOR SWITCH 1
To (AIR PROBE)
INTERNAL LINER
CHASSIS
LIQUID LINE SOLENOID VALVE
EVAPORATOR FAN
LED LIGHT FITTING
LED POWER SUPPLY
VAPOURISER FAN
VAPOURISER HEATER
VAPOURISER HEATER
DOOR SURROUND HEATER
(SEE NOTE 5)
NOTES:
1. FD1-19 CONTROLLER CONFIGURED FOR TIMED OFF CYCLE DEFROST.
2. MAINS LEAD CONNECTED WITH IEC C14 TYPE CONNECTOR - PLUG & LEAD TYPE VARIES BY APPLICATION.
3. AIR PROBE (To) 10KNTC TYPE (SN4K-...).
4. FD1-19 DISPLAY (01-580546-01) WITH CONNECTING CABLE (01-582638-01).
5. DOOR SURROUND HEATER FITTED AS AN OPTION.
6. ALL CABLES 1.0mmSQ CSA UNLESS OTHERWISE STATED.
7. CABLE COLOUR CODE:
BR = BROWN
BL = BLUE
G/Y = GREEN / YELLOW
(ALL EARTH WIRING TO BE GREEN/YELLOW)
RD = RED
BK = BLACK
WH = WHITE
GE = GREY
VI = VIOLET
OR = ORANGE
8. CIRCUIT SHOWN DE-ENERGISED.
FOSTER WIRING CENTRE FWC19 (01-580749-01) / LID (01-266727-02)
MAINS CONNECTOR
CABLE ACCESS
DATA ACCESS
FOSTER FD1-19 CONTROLLER (01-580690-01)
DISPLAY
TTL/COMM
FOSTER REFRIGERATOR
OLDMEDOW ROAD, KING'S LYNN,
NORFOLK. PE30 4JU UNITED KINGDOM
CUSTOMER COPY
WIRING DIAGRAM TITLE:
EP700GR
SINGLE SECTION HIGH TEMPERATURE REMOTE MODEL
DRAWING No.:
01-583022-00-01
SHEET 1 OF 1
REVISION: 01
DESCRIPTION: ORIGINAL
BY: WAD
DATE: 03/02/'20
SCALE: NTS
CHECKED IN ACCORDANCE WITH QP-07R-REV-E FORM NO. 1014 -
DATE: --/--/--

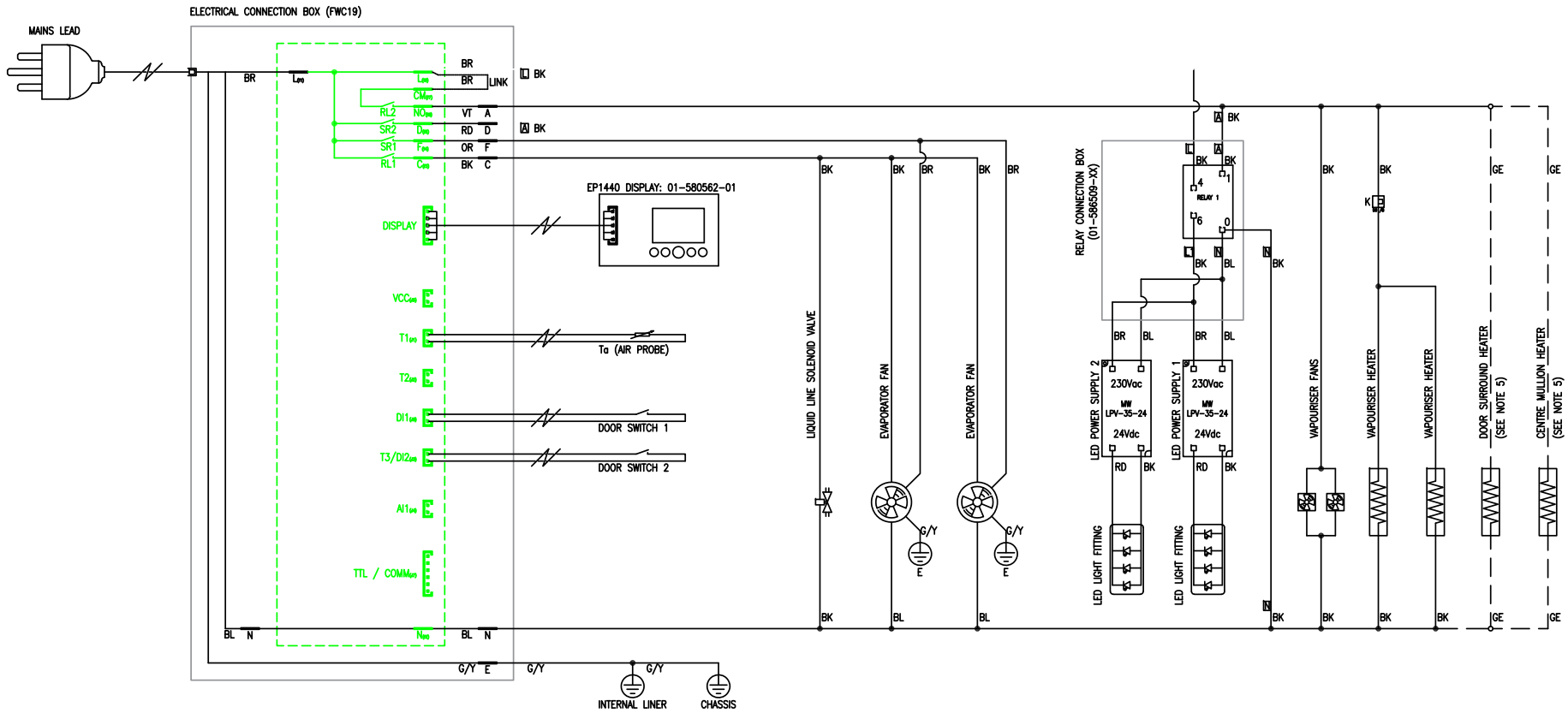

NOTES:

1. FD1-19 CONTROLLER CONFIGURED FOR TIMED OFF CYCLE DEFROST.
2. MAINS LEAD CONNECTED WITH IEC C14 TYPE CONNECTOR - PLUG & LEAD TYPE VARIES BY APPLICATION.
3. AIR PROBE (Ta) 10KNTC TYPE (SN4K....).
4. FD1-19 DISPLAY (01-580562-01) WITH CONNECTING CABLE (01-582638-01).
5. DOOR SURROUND HEATER FITTED AS AN OPTION.
6. ALL CABLES 1.0mmSQ CSA UNLESS OTHERWISE STATED.
7. CABLE COLOUR CODE:

BR - BROWN		RD - RED		GE - GREY	
BL - BLUE		BK - BLACK		VT - VIOLET	
G/Y - GREEN / YELLOW		WH - WHITE		OR - ORANGE	

(ALL EARTH WIRING TO BE GREEN/YELLOW)

8. CIRCUIT SHOWN DE-ENERGISED.

RELAY CONNECTION BOX (01-586509-XX)

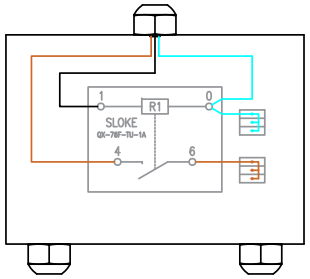

FOSTER WIRING CENTRE FWC19 (01-580749-01) / LID (01-266727-02)

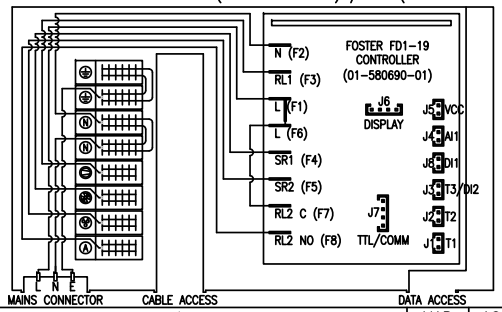

FOSTER REFRIGERATOR OLDMEDOW ROAD, KING'S LYNN, NORFOLK. PE30 4JU UNITED KINGDOM	**CUSTOMER COPY**	02 INTERIOR LIGHT WIRING CONNECTION / PARAMETERS MODIFIED REVISION: DESCRIPTION:	NAD 10/01/'22 BY: DATE:
		WIRING DIAGRAM TITLE: EP1400GR DOUBLE SECTION HIGH TEMPERATURE REMOTE MODEL	DRAWING No.: 01-583024-00-02 SHEET 1 OF 1
		DRAWN: NAD SCALE: NTS DATE: 03/02/'20 CHECKED IN ACCORDANCE WITH OP-070-DEV-E FORM NO. WD6 -	

www.fosterrefrigerator.com

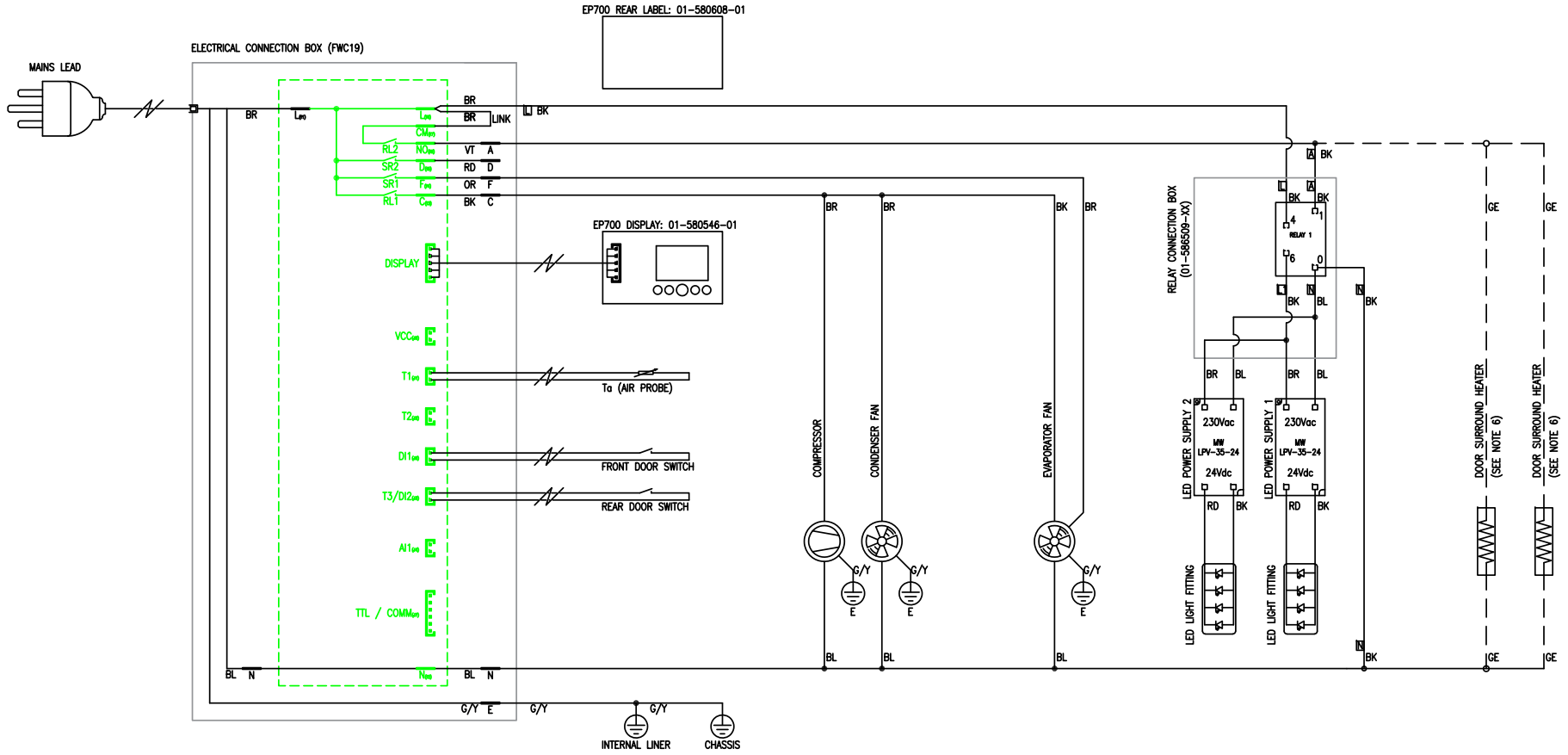

NOTES:

1. FD1-19 CONTROLLER CONFIGURED FOR TIMED OFF CYCLE DEFROST.
2. MAINS LEAD CONNECTED WITH IEC C14 TYPE CONNECTOR – PLUG & LEAD TYPE VARIES BY APPLICATION.
3. AIR PROBE (Ta) 10KNTC TYPE (SN4K....).
4. FD1-19 DISPLAY (01-580546-01) WITH CONNECTING CABLE (01-582638-01).
5. LED POWER SUPPLY 2 / 2ND LIGHT FITTING ONLY FITTED ON EP700PG GLASS / GLASS DOOR MODELS.
6. DOOR SURROUND HEATER FITTED AS AN OPTION.
7. ALL CABLES 1.0mmSQ CSA UNLESS OTHERWISE STATED.
8. CABLE COLOUR CODE:

BR	BROWN	RD	RED	GE	GREY
BL	BLUE	BK	BLACK	VT	VIOLET
G/Y	GREEN / YELLOW	WH	WHITE	OR	ORANGE

(ALL EARTH WIRING TO BE GREEN/YELLOW)

9. CIRCUIT SHOWN DE-ENERGISED.

RELAY CONNECTION BOX (01-586509-XX)

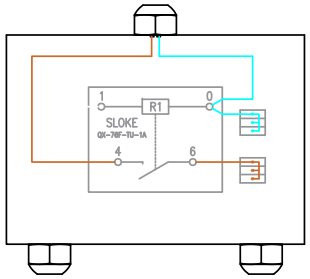

FOSTER WIRING CENTRE FWC19 (01-580749-01) / LID (01-266727-02)

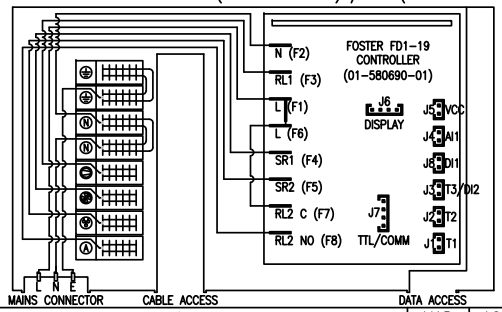

FOSTER REFRIGERATOR
OLDMEDOW ROAD, KING'S LYNN,
NORFOLK. PE30 4JU UNITED KINGDOM

CUSTOMER COPY

REVISION:	DESCRIPTION:	BY:	DATE:
02	INTERIOR LIGHT WIRING CONNECTION / PARAMETERS MODIFIED	NAD	10/01/'22

WIRING DIAGRAM TITLE:	DRAWING No.:	DRAWN:	SCALE:	DATE:
EP700PG SINGLE SECTION HIGH TEMPERATURE INTEGRAL MODEL	01-583027-00-02 SHEET 1 OF 1	NAD	NTS	03/02/'20

CHECKED IN ACCORDANCE WITH OP-070-DEV-E FORM NO. WD6 -

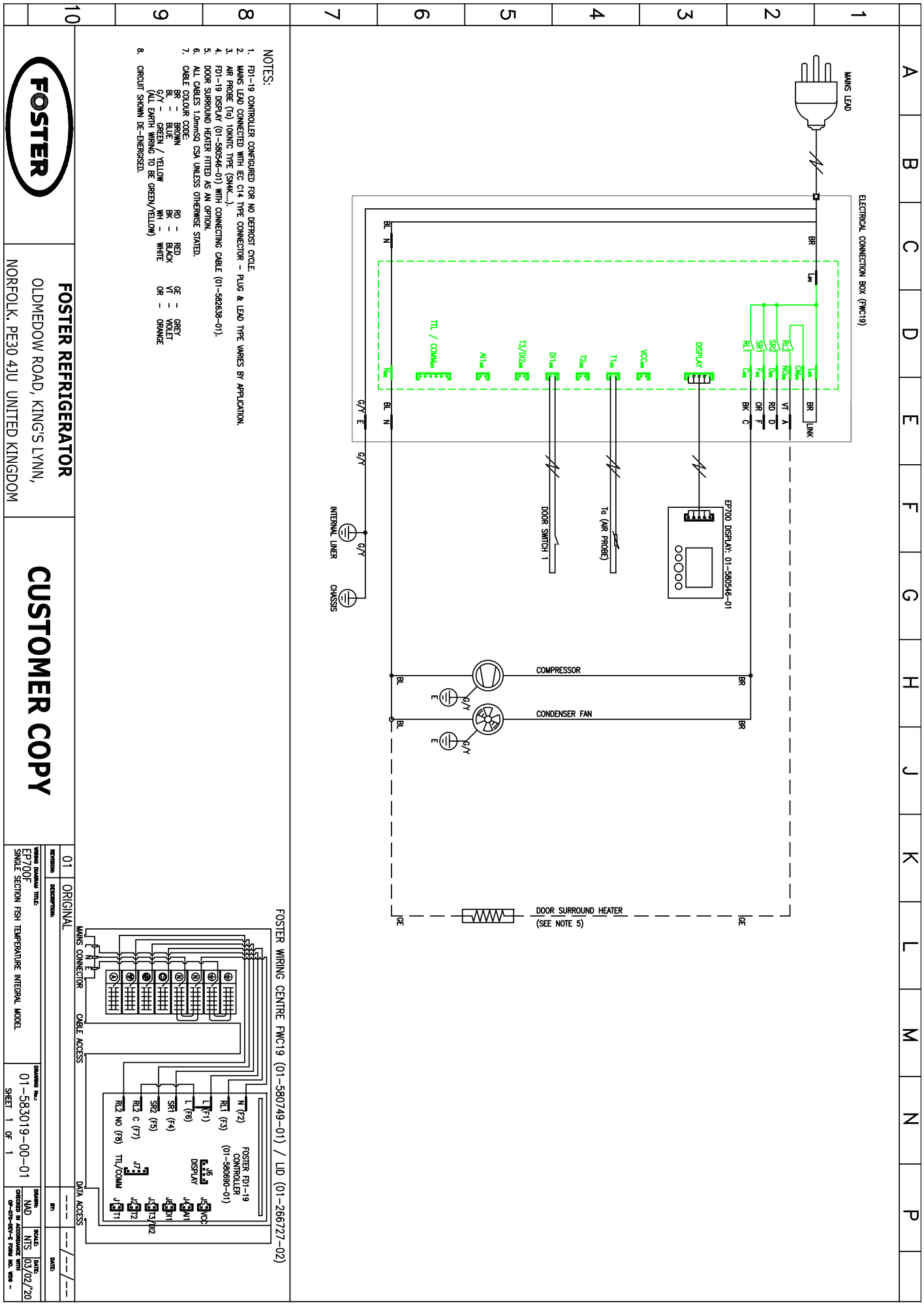
MAINS LEAD
ELECTRICAL CONNECTION BOX (FWC19)
DISPLAY
TTL / COMMm
AI1m
T3/DI2m
DI1m
T2m
T1m
VCCm
RL2
SR2
SR1
RL1
LINK
EP700 DISPLAY: 01-580546-01
To (AIR PROBE)
DOOR SWITCH 1
INTERNAL LINER
CHASSIS
COMPRESSOR
CONDENSER FAN
DOOR SURROUND HEATER
(SEE NOTE 5)
NOTES:
1. FD1-19 CONTROLLER CONFIGURED FOR NO DEFROST CYCLE.
2. MAINS LEAD CONNECTED WITH IEC C14 TYPE CONNECTOR - PLUG & LEAD TYPE VARIES BY APPLICATION.
3. AIR PROBE (To) 10KNTC TYPE (SN4K-...).
4. FD1-19 DISPLAY (01-580546-01) WITH CONNECTING CABLE (01-582638-01).
5. DOOR SURROUND HEATER FITTED AS AN OPTION.
6. ALL CABLES 1.0mmSQ CSA UNLESS OTHERWISE STATED.
7. CABLE COLOUR CODE:
BR = BROWN
BL = BLUE
G/Y = GREEN / YELLOW
(ALL EARTH WIRING TO BE GREEN/YELLOW)
RD = RED
BK = BLACK
WH = WHITE
GE = GREY
VI = VIOLET
OR = ORANGE
8. CIRCUIT SHOWN DE-ENERGISED.
FOSTER WIRING CENTRE FWC19 (01-580749-01) / LID (01-266727-02)
MAINS CONNECTOR
CABLE ACCESS
FOSTER FD1-19 CONTROLLER (01-580690-01)
DISPLAY
TTL/COMM
DATA ACCESS
FOSTER REFRIGERATOR
OLDMEDOW ROAD, KING'S LYNN,
NORFOLK. PE30 4JU UNITED KINGDOM
CUSTOMER COPY
01 ORIGINAL
EP700F
SINGLE SECTION FISH TEMPERATURE INTEGRAL MODEL
01-583019-00-01
SHEET 1 OF 1
NTS
03/02/'20

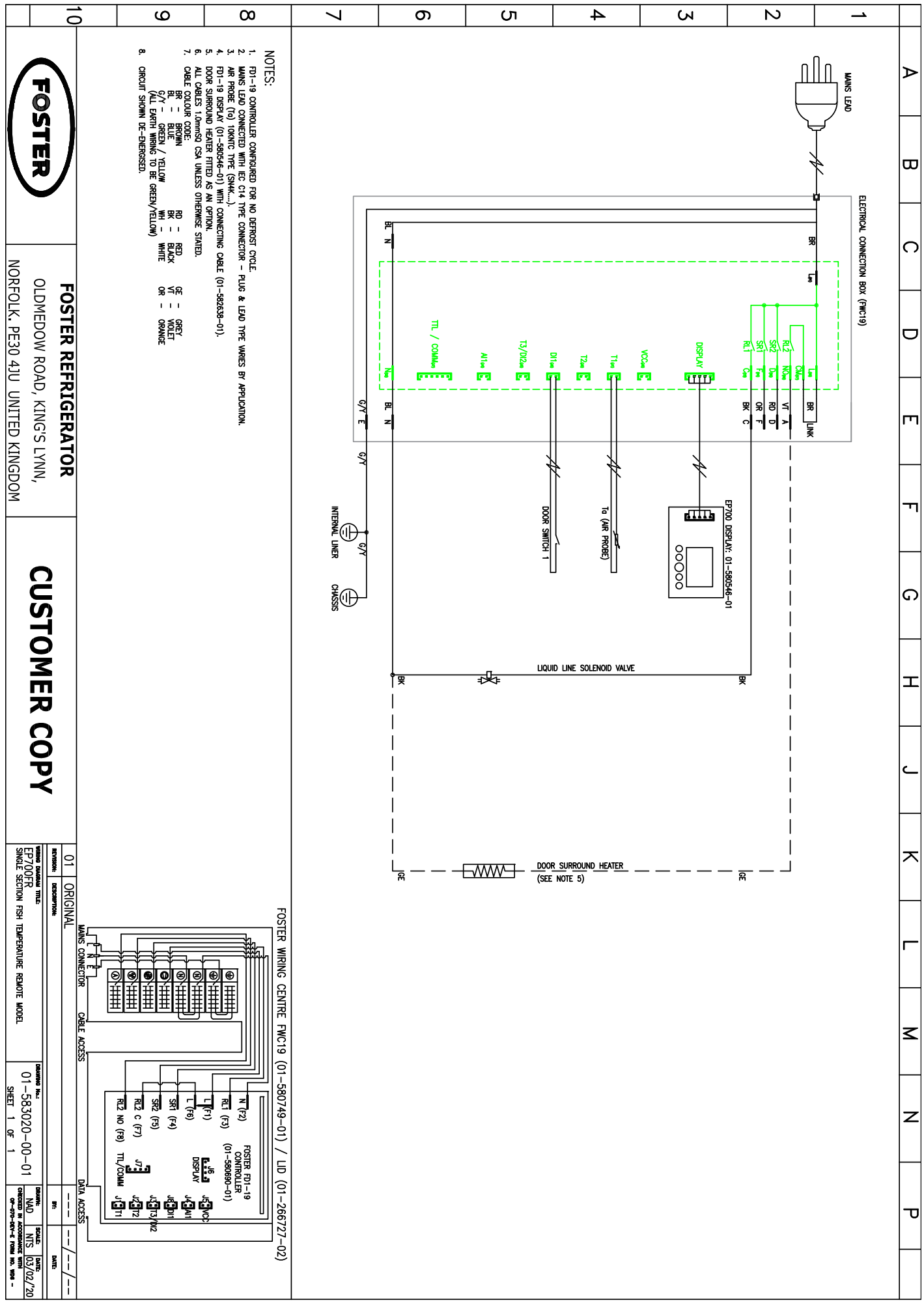
MAINS LEAD
ELECTRICAL CONNECTION BOX (FWC19)
DISPLAY
EP700 DISPLAY: 01-580546-01
To (AIR PROBE)
DOOR SWITCH 1
INTERNAL LINER
CHASSIS
LIQUID LINE SOLENOID VALVE
DOOR SURROUND HEATER
(SEE NOTE 5)
NOTES:
1. FD1-19 CONTROLLER CONFIGURED FOR NO DEFROST CYCLE.
2. MAINS LEAD CONNECTED WITH IEC C14 TYPE CONNECTOR - PLUG & LEAD TYPE VARIES BY APPLICATION.
3. AIR PROBE (To) 10KNTC TYPE (SN4K-...).
4. FD1-19 DISPLAY (01-580546-01) WITH CONNECTING CABLE (01-582638-01).
5. DOOR SURROUND HEATER FITTED AS AN OPTION.
6. ALL CABLES 1.0mmSQ CSA UNLESS OTHERWISE STATED.
7. CABLE COLOUR CODE:
BR = BROWN
BL = BLUE
G/Y = GREEN / YELLOW
(ALL EARTH WIRING TO BE GREEN/YELLOW)
RD = RED
BK = BLACK
WH = WHITE
GE = GREY
VI = VIOLET
OR = ORANGE
8. CIRCUIT SHOWN DE-ENERGISED.
FOSTER WIRING CENTRE FWC19 (01-580749-01) / LID (01-266727-02)
MAINS CONNECTOR
CABLE ACCESS
DATA ACCESS
FOSTER FD1-19 CONTROLLER (01-580690-01)
DISPLAY
TTL/COMM
FOSTER REFRIGERATOR
OLDMEDOW ROAD, KING'S LYNN,
NORFOLK. PE30 4JU UNITED KINGDOM
CUSTOMER COPY
01 ORIGINAL
EP700FR
SINGLE SECTION FISH TEMPERATURE REMOTE MODEL
01-583020-00-01
SHEET 1 OF 1
NTS
03/02/'20

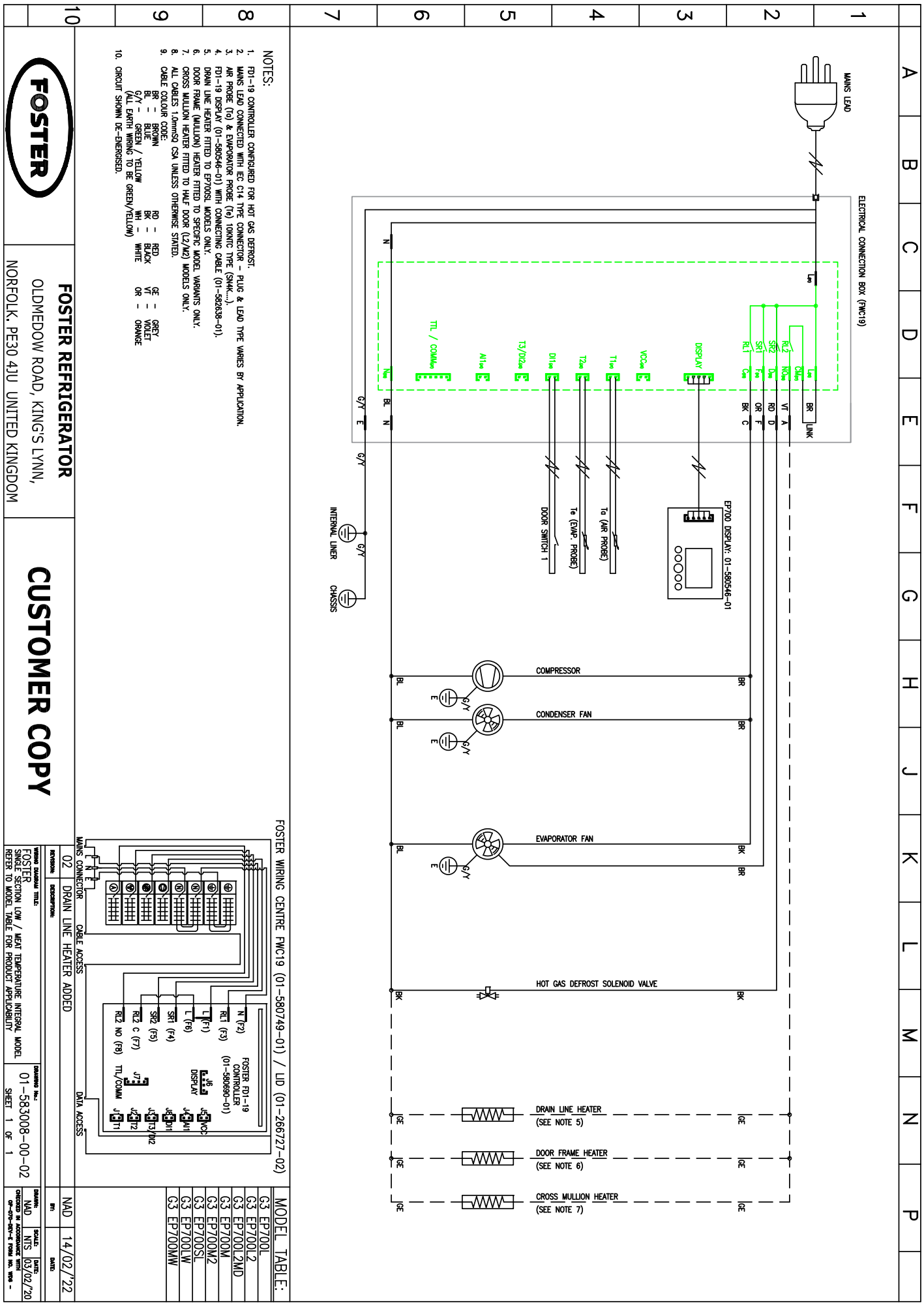
MAINS LEAD
ELECTRICAL CONNECTION BOX (FWC19)
EP700 DISPLAY: 01-580546-01
DOOR SWITCH 1
Te (EVAP. PROBE)
To (AIR PROBE)
INTERNAL LINER
CHASSIS
COMPRESSOR
CONDENSER FAN
EVAPORATOR FAN
HOT GAS DEFROST SOLENOID VALVE
DRAIN LINE HEATER
(SEE NOTE 5)
DOOR FRAME HEATER
(SEE NOTE 6)
CROSS MULLION HEATER
(SEE NOTE 7)
FOSTER WIRING CENTRE FWC19 (01-580749-01) / LID (01-266727-02)
FOSTER FD1-19 CONTROLLER (01-580690-01)
MAINS CONNECTOR
CABLE ACCESS
DATA ACCESS
NOTES:
1. FD1-19 CONTROLLER CONFIGURED FOR HOT GAS DEFROST.
2. MAINS LEAD CONNECTED WITH IEC C14 TYPE CONNECTOR - PLUG & LEAD TYPE VARIES BY APPLICATION.
3. AIR PROBE (To) & EVAPORATOR PROBE (Te) 10KNTC TYPE (SN4K...).
4. FD1-19 DISPLAY (01-580546-01) WITH CONNECTING CABLE (01-582638-01).
5. DRAIN LINE HEATER FITTED TO EP700SL MODELS ONLY.
6. DOOR FRAME (MULLION) HEATER FITTED TO SPECIFIC MODEL VARIANTS ONLY.
7. CROSS MULLION HEATER FITTED TO HALF DOOR (L2/M2) MODELS ONLY.
8. ALL CABLES 1.0mmSQ CSA UNLESS OTHERWISE STATED.
9. CABLE COLOUR CODE:
BR = BROWN
BL = BLUE
G/Y = GREEN / YELLOW
(ALL EARTH WIRING TO BE GREEN/YELLOW)
RD = RED
BK = BLACK
WH = WHITE
GE = GREY
VI = VIOLET
OR = ORANGE
10. CIRCUIT SHOWN DE-ENERGISED.
MODEL TABLE:
G3 EP700L
G3 EP700L2
G3 EP700L2MD
G3 EP700M
G3 EP700M2
G3 EP700SL
G3 EP700LW
G3 EP700MW
FOSTER REFRIGERATOR
OLDMEDOW ROAD, KING'S LYNN,
NORFOLK. PE30 4JU UNITED KINGDOM
CUSTOMER COPY
WIRING DIAGRAM TITLE:
FOSTER SINGLE SECTION LOW / MEAT TEMPERATURE INTEGRAL MODEL
REFER TO MODEL TABLE FOR PRODUCT APPLICABILITY
DRAWING No.:
01-583008-00-02
SHEET 1 OF 1
REVISION:
02
DESCRIPTION:
DRAIN LINE HEATER ADDED
DRAWN:
NAD
DATE:
14/02/'22
CHECKED:
SCALE:
NTS
DATE:
03/02/'20

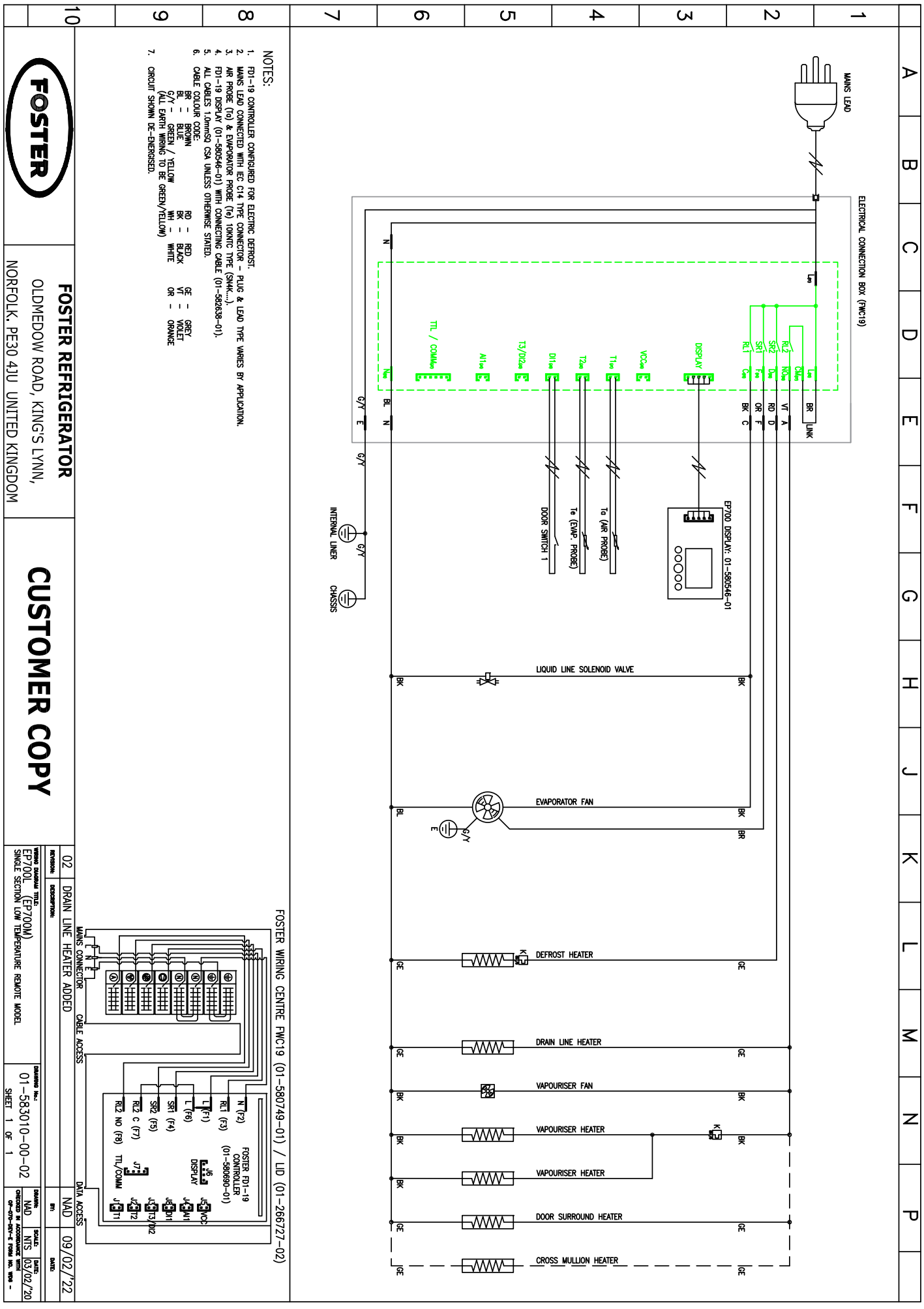
MAINS LEAD
ELECTRICAL CONNECTION BOX (FWC19)
LINK
DISPLAY
EP700 DISPLAY: 01-580546-01
To (AIR PROBE)
Te (EVAP. PROBE)
DOOR SWITCH 1
INTERNAL LINER
CHASSIS
LIQUID LINE SOLENOID VALVE
EVAPORATOR FAN
DEFROST HEATER
DRAIN LINE HEATER
VAPOURISER FAN
VAPOURISER HEATER
VAPOURISER HEATER
DOOR SURROUND HEATER
CROSS MULLION HEATER
TTL / COMMen
AI1en
T3/DI2en
DI1en
T2en
T1en
VCCen
DISPLAY
Len
CMCen
NCen
Den
Fen
Cen
RL2
SR2
SR1
RL1
Nen
BR
VT
RD
OR
BK
A
D
F
C
E
N
BL
G/Y
GE
BK
BR
FOSTER WIRING CENTRE FWC19 (01-580749-01) / LID (01-266727-02)
MAINS CONNECTOR
CABLE ACCESS
DATA ACCESS
FOSTER FD1-19 CONTROLLER (01-580690-01)
J5 DISPLAY
J6 AI1
J7 DI1
J8 T3/DI2
J9 VCC
J10 T1
J11 T2
J12 TTL/COMM
N (F2)
RL1 (F3)
L (F1)
L (F6)
SR1 (F4)
SR2 (F5)
RL2 C (F7)
RL2 NO (F8)
NOTES:
1. FD1-19 CONTROLLER CONFIGURED FOR ELECTRIC DEFROST.
2. MAINS LEAD CONNECTED WITH IEC C14 TYPE CONNECTOR - PLUG & LEAD TYPE VARIES BY APPLICATION.
3. AIR PROBE (To) & EVAPORATOR PROBE (Te) 10KNTC TYPE (SN44K...).
4. FD1-19 DISPLAY (01-580546-01) WITH CONNECTING CABLE (01-582638-01).
5. ALL CABLES 1.0mmSQ CSA UNLESS OTHERWISE STATED.
6. CABLE COLOUR CODE:
BR = BROWN
BL = BLUE
G/Y = GREEN / YELLOW
(ALL EARTH WIRING TO BE GREEN/YELLOW)
RD = RED
BK = BLACK
WH = WHITE
GE = GREY
VT = VIOLET
OR = ORANGE
7. CIRCUIT SHOWN DE-ENERGISED.
FOSTER
FOSTER REFRIGERATOR
OLDMEDOW ROAD, KING'S LYNN,
NORFOLK. PE30 4JU UNITED KINGDOM
CUSTOMER COPY
02 DRAIN LINE HEATER ADDED NAD 09/02/'22
WIRING DIAGRAM TITLE: EP700L (EP700M) SINGLE SECTION LOW TEMPERATURE REMOTE MODEL
DRAWING No.: 01-583010-00-02
SHEET 1 OF 1
DRAWN: NAD
CHECKED:
SCALE: NTS
DATE: 03/02/'20
IN ACCORDANCE WITH BS EN 61082-1:2006

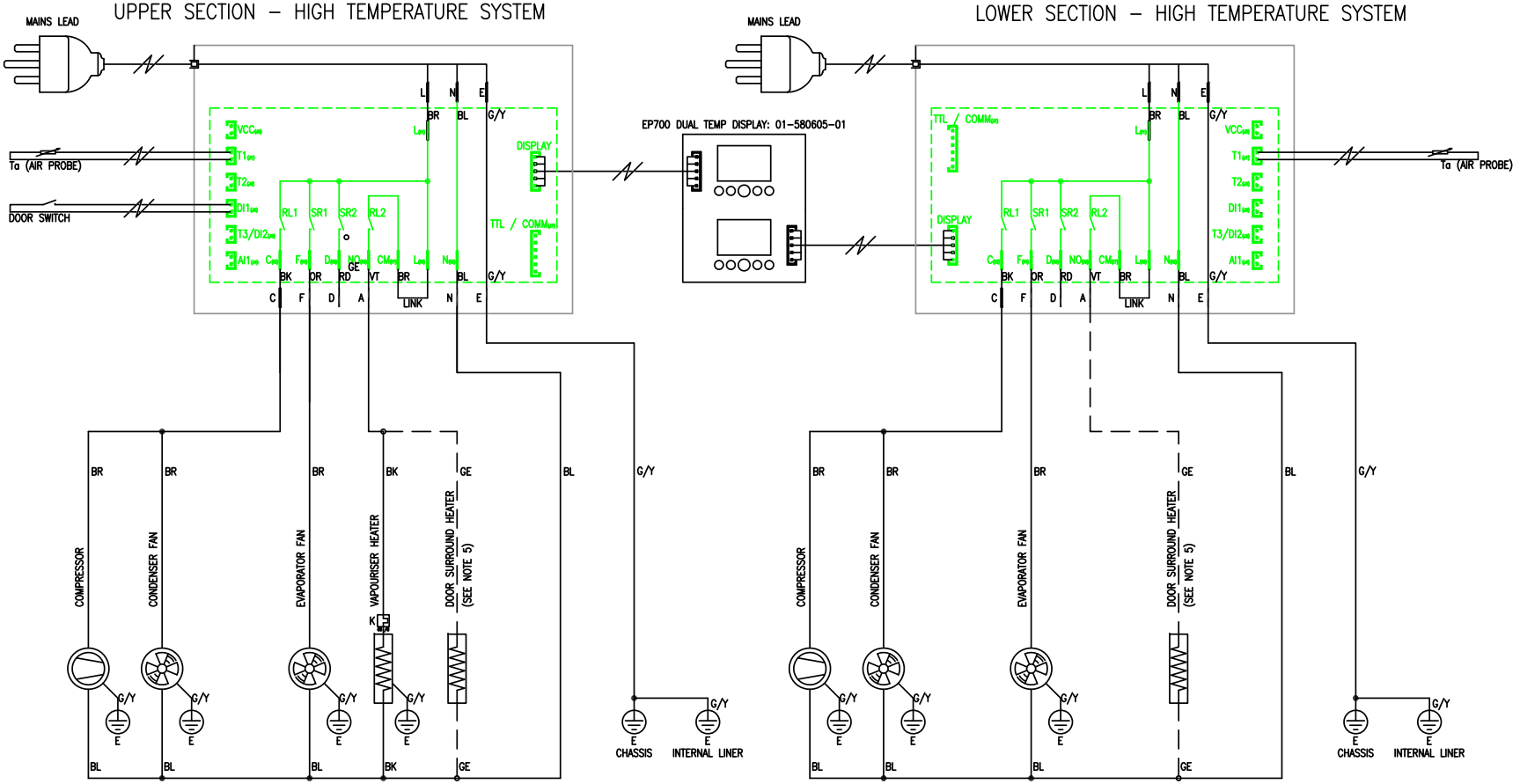

NOTES:

1. FD1-19 CONTROLLER CONFIGURED FOR TIMED OFF CYCLE DEFROST.
2. MAINS LEAD CONNECTED WITH IEC C14 TYPE CONNECTOR – PLUG & LEAD TYPE VARIES BY APPLICATION.
3. AIR PROBE (Ta) 10KNTC TYPE (SN4K....).
4. FD1-19 DISPLAY (01-580546-01) WITH CONNECTING CABLE (01-582638-01).
5. DOOR SURROUND HEATER FITTED AS AN OPTION.
6. ALL CABLES 1.0mmSQ CSA UNLESS OTHERWISE STATED.
7. CABLE COLOUR CODE:

BR	– BROWN	RD	– RED	GE	– GREY
BL	– BLUE	BK	– BLACK	VT	– VIOLET
G/Y	– GREEN / YELLOW	WH	– WHITE	OR	– ORANGE

(ALL EARTH WIRING TO BE GREEN/YELLOW)

8. CIRCUIT SHOWN DE-ENERGISED.

FOSTER WIRING CENTRE FWC19 (01-580749-01) / LID (01-266727-02)

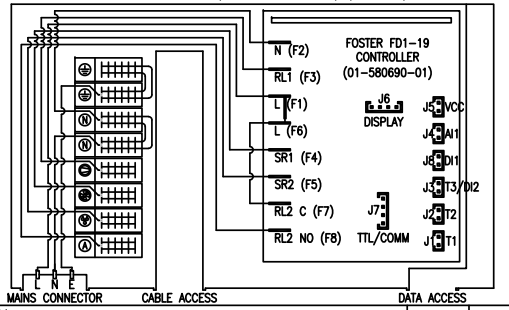

FOSTER REFRIGERATOR
OLDMEDOW ROAD, KING'S LYNN,
NORFOLK. PE30 4JU UNITED KINGDOM

CUSTOMER COPY

REVISION:	DESCRIPTION:	BY:	DATE:
01	ORIGINAL	---	--/--/--

WIRING DIAGRAM TITLE: EP700HH SINGLE SECTION DUAL COMPARTMENT INTEGRAL MODEL	DRAWING No.: 01-583044-00-01 SHEET 1 OF 1	DRAWN: NAD	SCALE: NTS	DATE: 03/02/'20
		CHECKED IN ACCORDANCE WITH OP-070-DEV-E FORM NO. WD6 –		

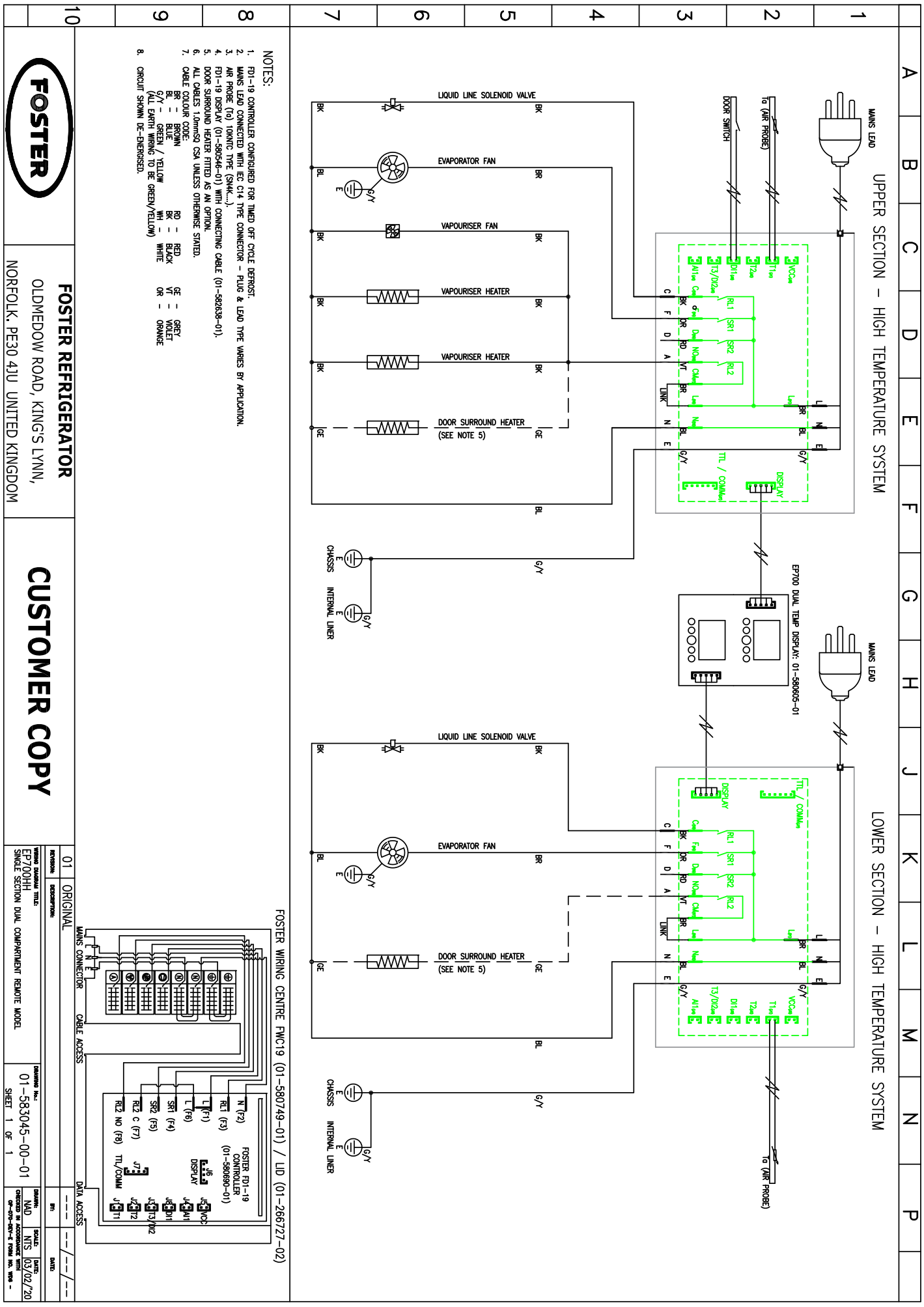
UPPER SECTION – HIGH TEMPERATURE SYSTEM
LOWER SECTION – HIGH TEMPERATURE SYSTEM
MAINS LEAD
DOOR SWITCH
To (AIR PROBE)
LIQUID LINE SOLENOID VALVE
EVAPORATOR FAN
VAPOURISER FAN
VAPOURISER HEATER
VAPOURISER HEATER
DOOR SURROUND HEATER
(SEE NOTE 5)
CHASSIS
INTERNAL LINER
DISPLAY
TTL / COMMs
EP700 DUAL TEMP DISPLAY: 01-580605-01
NOTES:
1. FD1-19 CONTROLLER CONFIGURED FOR TIMED OFF CYCLE DEFROST.
2. MAINS LEAD CONNECTED WITH IEC C14 TYPE CONNECTOR - PLUG & LEAD TYPE VARIES BY APPLICATION.
3. AIR PROBE (To) 10KNTC TYPE (SN4K-...).
4. FD1-19 DISPLAY (01-580546-01) WITH CONNECTING CABLE (01-582639-01).
5. DOOR SURROUND HEATER FITTED AS AN OPTION.
6. ALL CABLES 1.0mmSQ CSA UNLESS OTHERWISE STATED.
7. CABLE COLOUR CODE:
BR - BROWN RD - RED GE - GREY
BL - BLUE BK - BLACK VI - VIOLET
G/Y - GREEN / YELLOW WH - WHITE OR - ORANGE
(ALL EARTH WIRING TO BE GREEN/YELLOW)
8. CIRCUIT SHOWN DE-ENERGISED.
FOSTER WIRING CENTRE FWC19 (01-580749-01) / LID (01-266727-02)
MAINS CONNECTOR
CABLE ACCESS
DATA ACCESS
FOSTER FD1-19 CONTROLLER (01-580690-01)
DISPLAY
TTL/COMM
FOSTER REFRIGERATOR
OLDMEDOW ROAD, KING'S LYNN,
NORFOLK. PE30 4JU UNITED KINGDOM
CUSTOMER COPY
WIRING DIAGRAM TITLE:
EP700HH
SINGLE SECTION DUAL COMPARTMENT REMOTE MODEL
DRAWING No.:
01-583045-00-01
SHEET 1 OF 1
REVISION: 01
DESCRIPTION: ORIGINAL
DRAWN: NAD
CHECKED:
SCALE: NTS
DATE: 03/02/'20
DATE: --/--/--

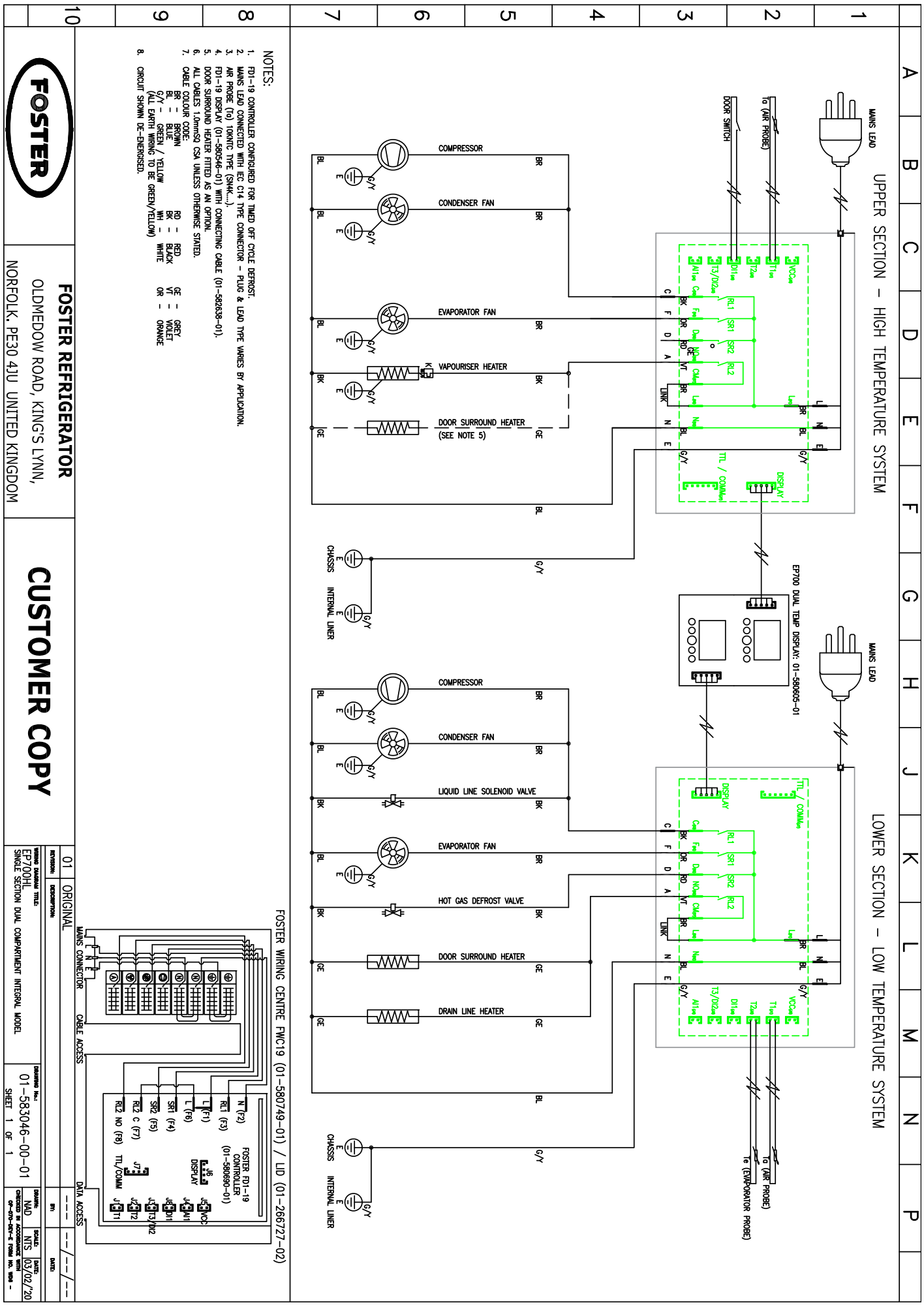
UPPER SECTION – HIGH TEMPERATURE SYSTEM
LOWER SECTION – LOW TEMPERATURE SYSTEM
MAINS LEAD
DOOR SWITCH
To (AIR PROBE)
COMPRESSOR
CONDENSER FAN
EVAPORATOR FAN
VAPOURISER HEATER
DOOR SURROUND HEATER
(SEE NOTE 5)
CHASSIS
INTERNAL LINER
EP700 DUAL TEMP DISPLAY: 01-580605-01
LIQUID LINE SOLENOID VALVE
HOT GAS DEFROST VALVE
DRAIN LINE HEATER
Te (EVAPORATOR PROBE)
NOTES:
1. FD1-19 CONTROLLER CONFIGURED FOR TIMED OFF CYCLE DEFROST.
2. MAINS LEAD CONNECTED WITH IEC C14 TYPE CONNECTOR – PLUG & LEAD TYPE VARIES BY APPLICATION.
3. AIR PROBE (To) 10KNTC TYPE (SN4K-...).
4. FD1-19 DISPLAY (01-580546-01) WITH CONNECTING CABLE (01-582638-01).
5. DOOR SURROUND HEATER FITTED AS AN OPTION.
6. ALL CABLES 1.0mmSQ CSA UNLESS OTHERWISE STATED.
7. CABLE COLOUR CODE:
BR = BROWN RD = RED GE = GREY
BL = BLUE BK = BLACK VI = VIOLET
G/Y = GREEN / YELLOW WH = WHITE OR = ORANGE
(ALL EARTH WIRING TO BE GREEN/YELLOW)
8. CIRCUIT SHOWN DE-ENERGISED.
FOSTER WIRING CENTRE FWC19 (01-580749-01) / LID (01-266727-02)
MAINS CONNECTOR
CABLE ACCESS
DATA ACCESS
FOSTER FD1-19 CONTROLLER (01-580690-01)
DISPLAY
TTL/COMMs
FOSTER REFRIGERATOR
OLDMEDOW ROAD, KING'S LYNN,
NORFOLK. PE30 4JU UNITED KINGDOM
CUSTOMER COPY
EP700HL
SINGLE SECTION DUAL COMPARTMENT INTEGRAL MODEL
01-583046-00-01
SHEET 1 OF 1
01 ORIGINAL
NAD
NTS
03/02/'20

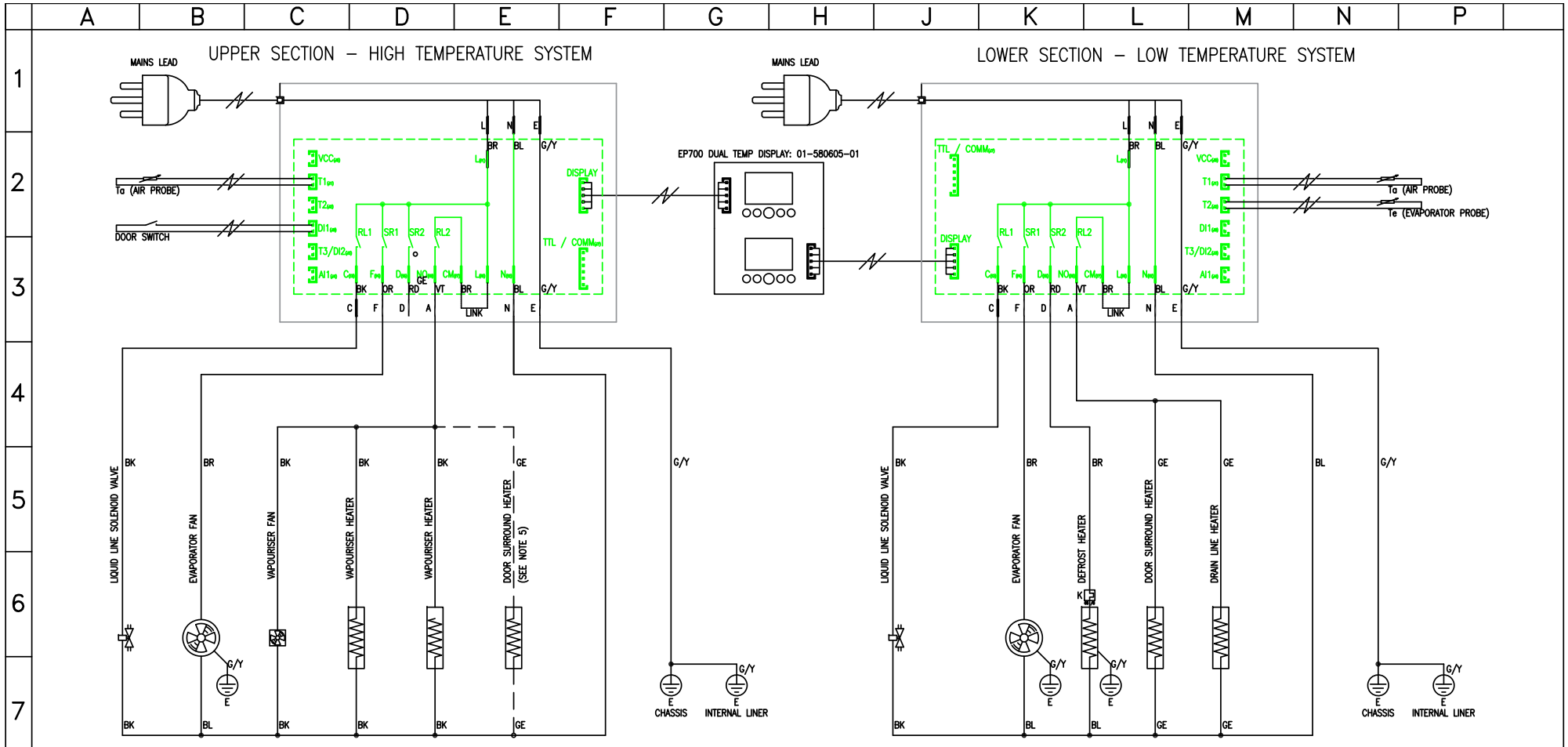

NOTES:

1. FD1–19 CONTROLLER CONFIGURED FOR TIMED OFF CYCLE DEFROST.
2. MAINS LEAD CONNECTED WITH IEC C14 TYPE CONNECTOR – PLUG & LEAD TYPE VARIES BY APPLICATION.
3. AIR PROBE (Ta) 10KNTC TYPE (SN4K....).
4. FD1–19 DISPLAY (01–580546–01) WITH CONNECTING CABLE (01–582638–01).
5. DOOR SURROUND HEATER FITTED AS AN OPTION.
6. ALL CABLES 1.0mmSQ CSA UNLESS OTHERWISE STATED.
7. CABLE COLOUR CODE:
   BR – BROWN, RD – RED, GE – GREY
   BL – BLUE, BK – BLACK, VT – VIOLET
   G/Y – GREEN / YELLOW, WH – WHITE, OR – ORANGE
   (ALL EARTH WIRING TO BE GREEN/YELLOW)
8. CIRCUIT SHOWN DE–ENERGISED.

FOSTER WIRING CENTRE FWC19 (01–580749–01) / LID (01–266727–02)

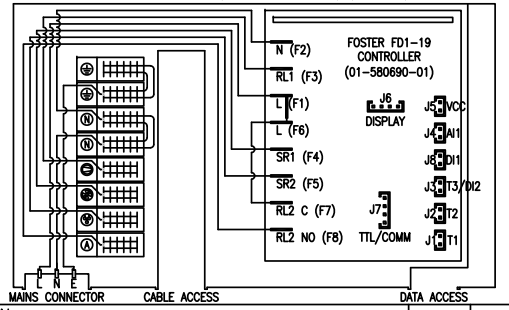

FOSTER REFRIGERATOR
OLDMEDOW ROAD, KING'S LYNN,
NORFOLK. PE30 4JU UNITED KINGDOM

CUSTOMER COPY

REVISION:	DESCRIPTION:	BY:	DATE:
01	ORIGINAL	---	--/--/--

WIRING DIAGRAM TITLE:	DRAWING No.:	DRAWN:	SCALE:	DATE:
EP700HL SINGLE SECTION DUAL COMPARTMENT REMOTE MODEL	01–583047–00–01 SHEET 1 OF 1	NAD	NTS	03/02/'20

CHECKED IN ACCORDANCE WITH OP–07G–DEV–E FORM NO. WD8 –

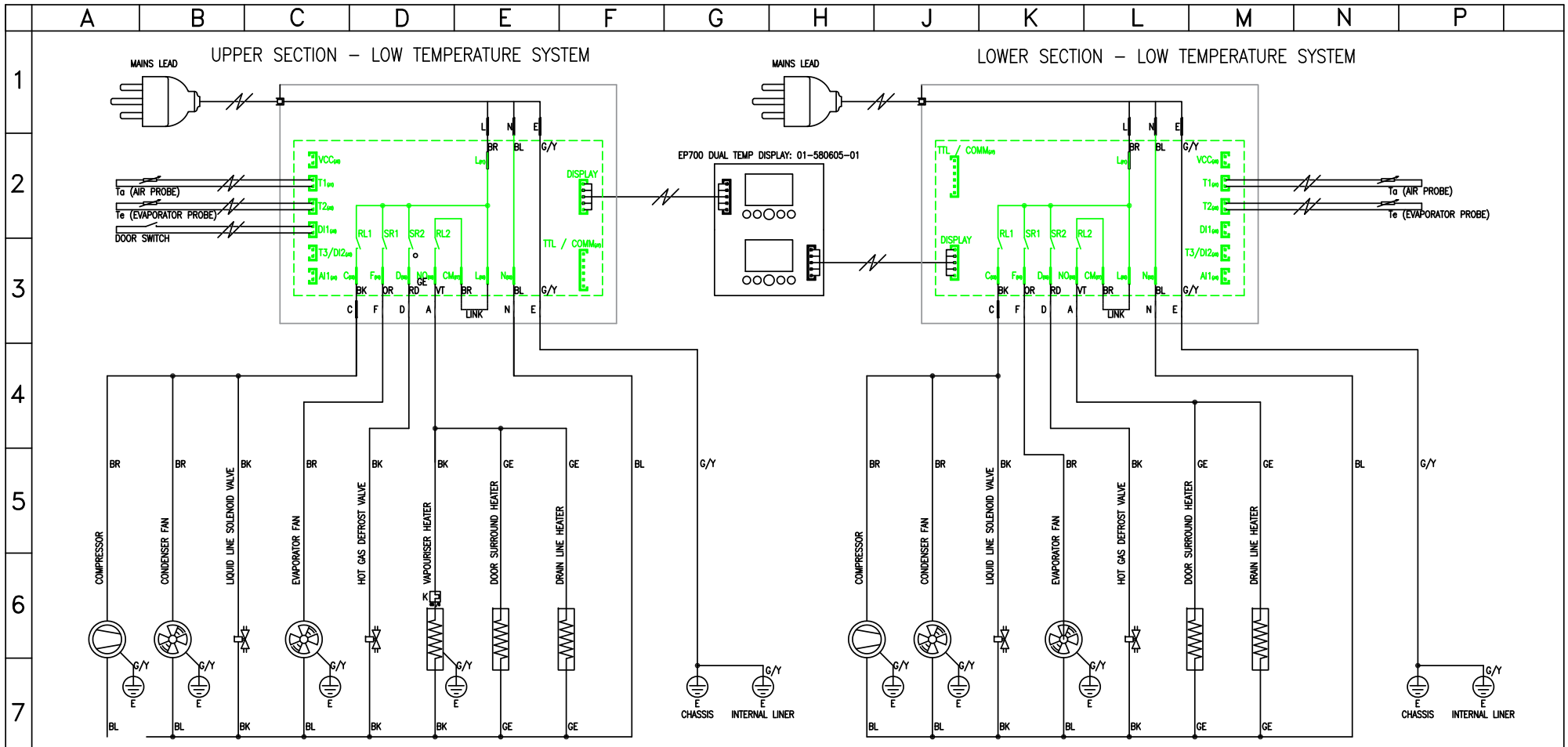

NOTES:

1. FD1-19 CONTROLLER CONFIGURED FOR TIMED OFF CYCLE DEFROST.
2. MAINS LEAD CONNECTED WITH IEC C14 TYPE CONNECTOR – PLUG & LEAD TYPE VARIES BY APPLICATION.
3. AIR PROBE (Ta) 10KNTC TYPE (SN4K....).
4. FD1-19 DISPLAY (01-580546-01) WITH CONNECTING CABLE (01-582638-01).
5. ALL CABLES 1.0mmSQ CSA UNLESS OTHERWISE STATED.
6. CABLE COLOUR CODE:

BR – BROWN		RD – RED		GE – GREY	
BL – BLUE		BK – BLACK		VT – VIOLET	
G/Y – GREEN / YELLOW		WH – WHITE		OR – ORANGE	
(ALL EARTH WIRING TO BE GREEN/YELLOW)					

7. CIRCUIT SHOWN DE-ENERGISED.

FOSTER WIRING CENTRE FWC19 (01-580749-01) / LID (01-266727-02)

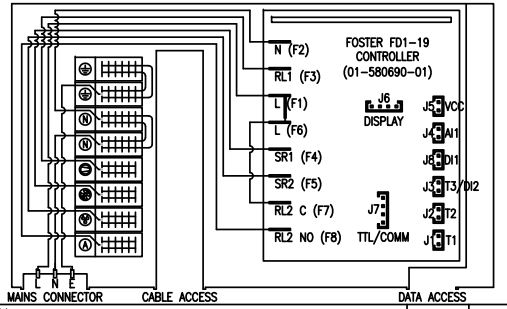

FOSTER REFRIGERATOR
OLDMEDOW ROAD, KING'S LYNN,
NORFOLK. PE30 4JU UNITED KINGDOM

CUSTOMER COPY

REVISION:	DESCRIPTION:	BY:	DATE:
01	ORIGINAL	---	--/--/--

WIRING DIAGRAM TITLE: EP700LL SINGLE SECTION DUAL COMPARTMENT INTEGRAL MODEL	DRAWING No.: 01-583048-00-01 SHEET 1 OF 1	DRAWN: NAD	SCALE: NTS	DATE: 03/02/'20
		CHECKED IN ACCORDANCE WITH OP-070-DEV-E FORM NO. WD6 –		

www.fosterefrigerator.com

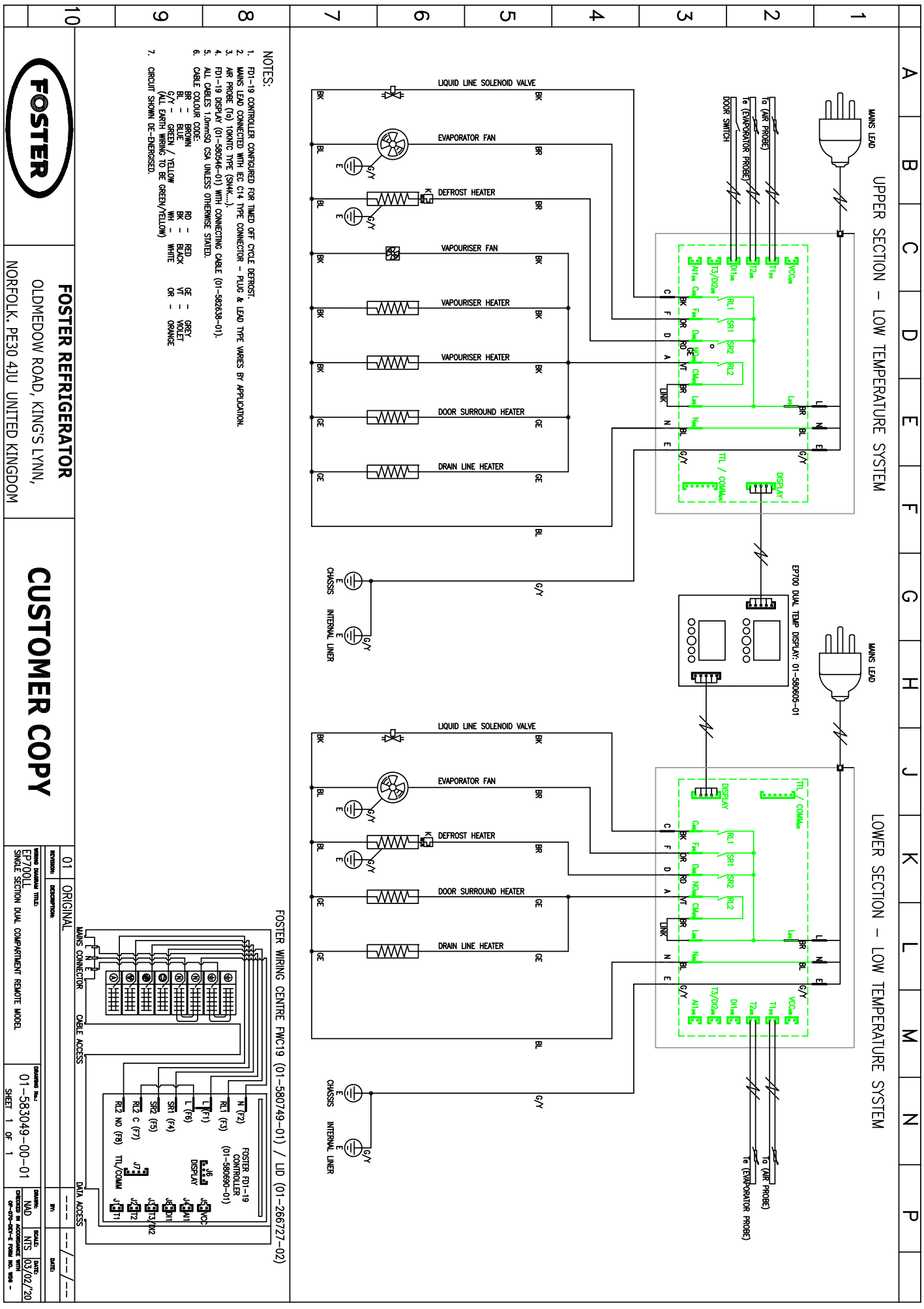
UPPER SECTION – LOW TEMPERATURE SYSTEM
LOWER SECTION – LOW TEMPERATURE SYSTEM
MAINS LEAD
To (AIR PROBE)
To (EVAPORATOR PROBE)
DOOR SWITCH
LIQUID LINE SOLENOID VALVE
EVAPORATOR FAN
DEFROST HEATER
VAPOURISER FAN
VAPOURISER HEATER
VAPOURISER HEATER
DOOR SURROUND HEATER
DRAIN LINE HEATER
CHASSIS
INTERNAL LINER
EP700 DUAL TEMP DISPLAY: 01-580605-01
DISPLAY
TTL / COMMs
FOSTER WIRING CENTRE FWC19 (01-580749-01) / LID (01-266727-02)
MAINS CONNECTOR
CABLE ACCESS
DATA ACCESS
FOSTER FD1-19 CONTROLLER (01-580690-01)
J6 DISPLAY
J7 TTL/COMM
NOTES:
1. FD1-19 CONTROLLER CONFIGURED FOR TIMED OFF CYCLE DEFROST.
2. MAINS LEAD CONNECTED WITH IEC C14 TYPE CONNECTOR – PLUG & LEAD TYPE VARIES BY APPLICATION.
3. AIR PROBE (To) 10KNTC TYPE (SN4K-...).
4. FD1-19 DISPLAY (01-580546-01) WITH CONNECTING CABLE (01-582638-01).
5. ALL CABLES 1.0mmSQ CSA UNLESS OTHERWISE STATED.
6. CABLE COLOUR CODE:
BR = BROWN
BL = BLUE
G/Y = GREEN / YELLOW (ALL EARTH WIRING TO BE GREEN/YELLOW)
RD = RED
BK = BLACK
WH = WHITE
GE = GREY
VI = VIOLET
OR = ORANGE
7. CIRCUIT SHOWN DE-ENERGISED.
FOSTER
FOSTER REFRIGERATOR
OLDMEDOW ROAD, KING'S LYNN,
NORFOLK. PE30 4JU UNITED KINGDOM
CUSTOMER COPY
WIRING DIAGRAM TITLE: EP700LL SINGLE SECTION DUAL COMPARTMENT REMOTE MODEL
DRAWING No.: 01-583049-00-01
SHEET 1 OF 1
REVISION: 01
DESCRIPTION: ORIGINAL
BY: ---
DATE: --/--/--
DRAWN: NAD
SCALE: NTS
DATE: 03/02/'20

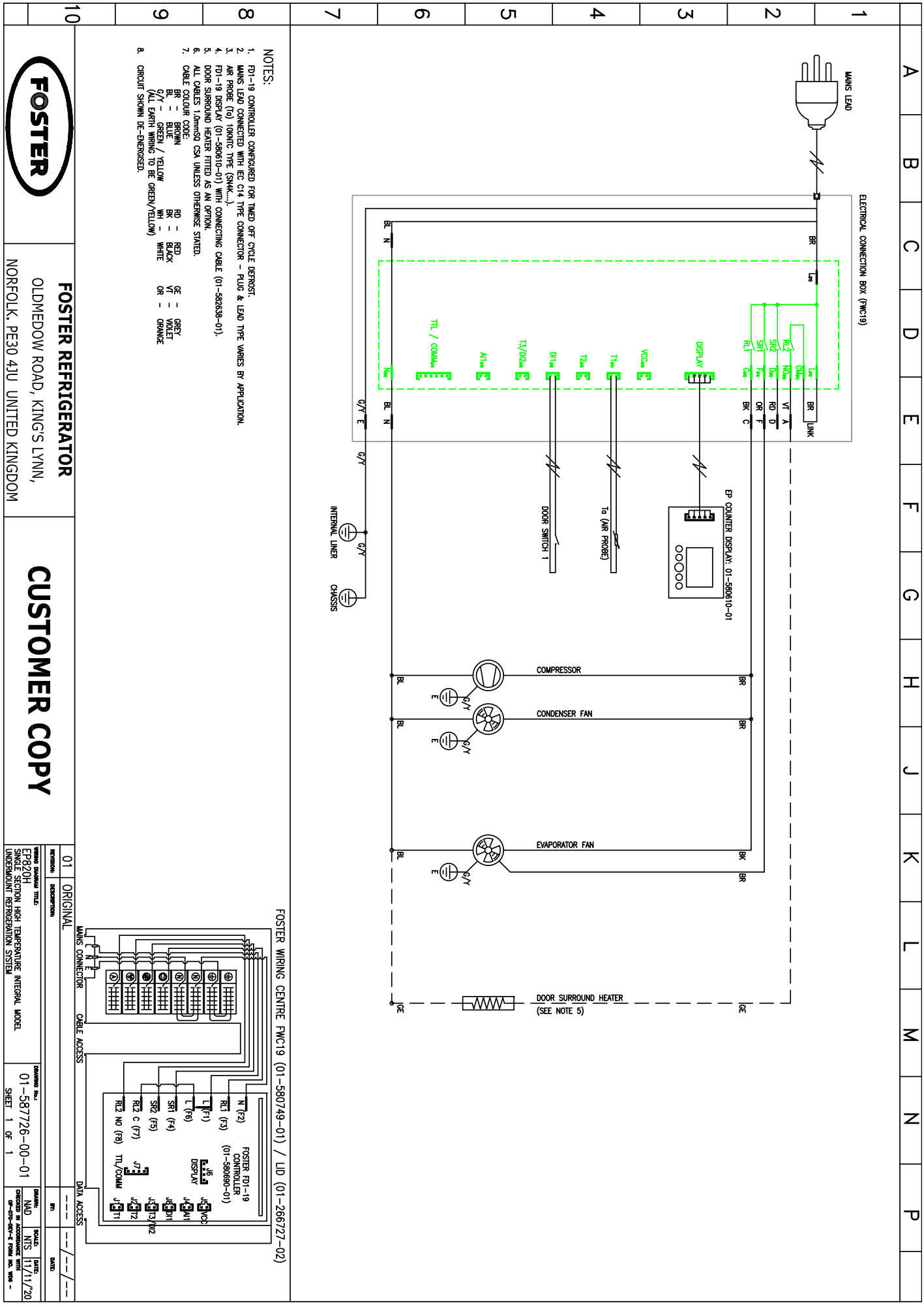
MAINS LEAD
ELECTRICAL CONNECTION BOX (FWC19)
DISPLAY
EP COUNTER DISPLAY: 01-580610-01
To (AIR PROBE)
DOOR SWITCH 1
INTERNAL LINER
CHASSIS
COMPRESSOR
CONDENSER FAN
EVAPORATOR FAN
DOOR SURROUND HEATER
(SEE NOTE 5)
LINK
NOTES:
1. FD1-19 CONTROLLER CONFIGURED FOR TIMED OFF CYCLE DEFROST.
2. MAINS LEAD CONNECTED WITH IEC C14 TYPE CONNECTOR - PLUG & LEAD TYPE VARIES BY APPLICATION.
3. AIR PROBE (To) 10KNTC TYPE (SN4K-...).
4. FD1-19 DISPLAY (01-580610-01) WITH CONNECTING CABLE (01-582638-01).
5. DOOR SURROUND HEATER FITTED AS AN OPTION.
6. ALL CABLES 1.0mmSQ CSA UNLESS OTHERWISE STATED.
7. CABLE COLOUR CODE:
BR - BROWN
BL - BLUE
G/Y - GREEN / YELLOW
(ALL EARTH WIRING TO BE GREEN/YELLOW)
RD - RED
BK - BLACK
WH - WHITE
GE - GREY
VI - VIOLET
OR - ORANGE
8. CIRCUIT SHOWN DE-ENERGISED.
FOSTER WIRING CENTRE FWC19 (01-580749-01) / LID (01-266727-02)
MAINS CONNECTOR
CABLE ACCESS
DATA ACCESS
FOSTER FD1-19 CONTROLLER (01-580690-01)
DISPLAY
TTL/COMM
FOSTER REFRIGERATOR
OLDMEDOW ROAD, KING'S LYNN,
NORFOLK. PE30 4JU UNITED KINGDOM
CUSTOMER COPY
DRAWING TITLE:
EP820H SINGLE SECTION HIGH TEMPERATURE INTEGRAL MODEL UNDERMOUNT REFRIGERATION SYSTEM
DRAWING No.:
01-587726-00-01
SHEET 1 OF 1
REVISION: 01
DESCRIPTION: ORIGINAL
DRAWN: NAD
CHECKED:
DATE: 11/11/'20
SCALE: NTS
DATE: --/--/--

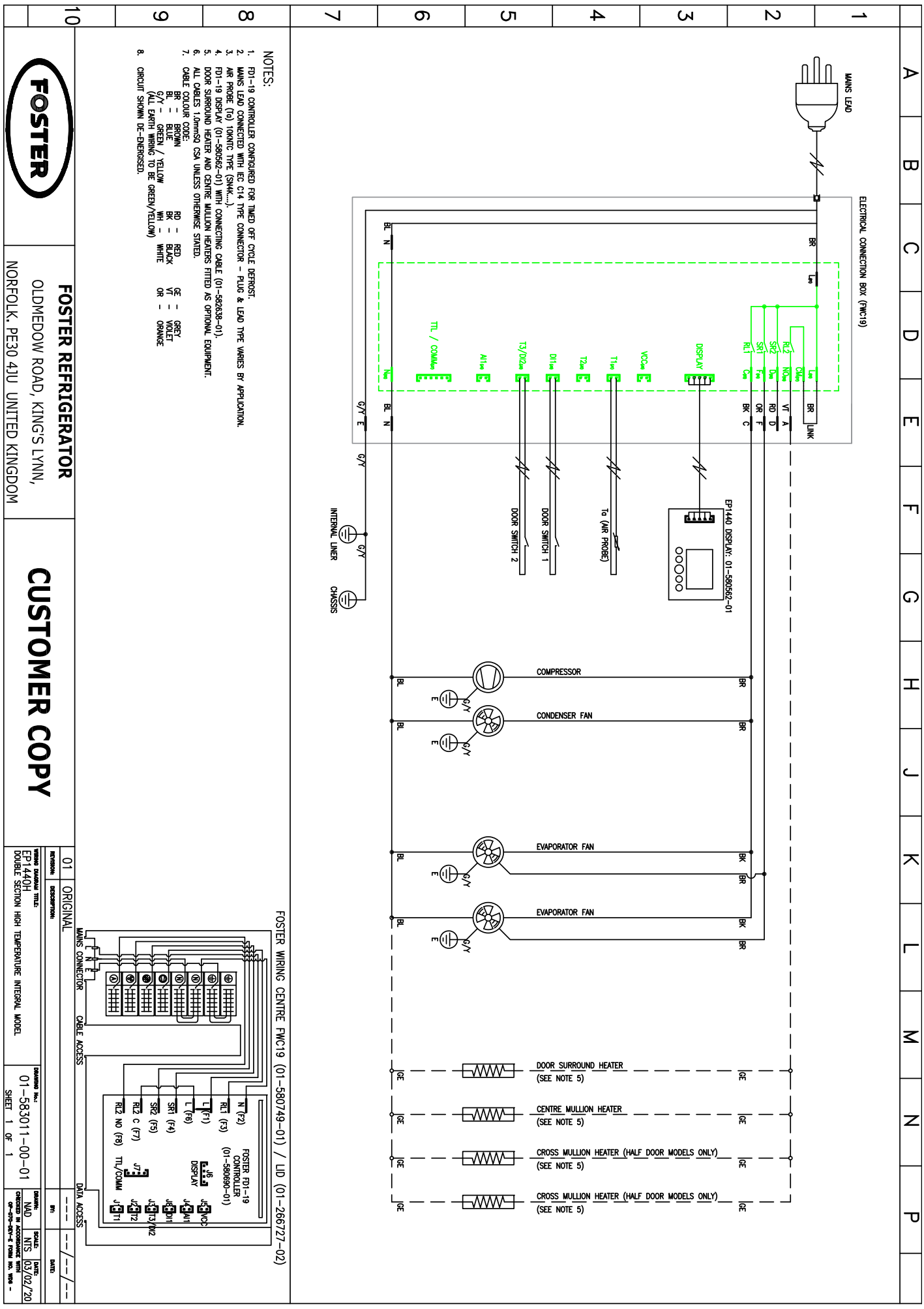
NOTES:
1. FD1-19 CONTROLLER CONFIGURED FOR TIMED OFF CYCLE DEFROST.
2. MAINS LEAD CONNECTED WITH IEC C14 TYPE CONNECTOR - PLUG & LEAD TYPE VARIES BY APPLICATION.
3. AIR PROBE (To) 10KNTC TYPE (SN4K-...).
4. FD1-19 DISPLAY (01-580562-01) WITH CONNECTING CABLE (01-582638-01).
5. DOOR SURROUND HEATER AND CENTRE MULLION HEATERS FITTED AS OPTIONAL EQUIPMENT.
6. ALL CABLES 1.0mmSQ CSA UNLESS OTHERWISE STATED.
7. CABLE COLOUR CODE:
BR - BROWN
BL - BLUE
G/Y - GREEN / YELLOW
(ALL EARTH WIRING TO BE GREEN/YELLOW)
RD - RED
BK - BLACK
WH - WHITE
GE - GREY
VI - VIOLET
OR - ORANGE
8. CIRCUIT SHOWN DE-ENERGISED.
FOSTER WIRING CENTRE FWC19 (01-580749-01) / LID (01-266727-02)
MAINS LEAD
ELECTRICAL CONNECTION BOX (FWC19)
DISPLAY
EP1440 DISPLAY: 01-580562-01
To (AIR PROBE)
DOOR SWITCH 1
DOOR SWITCH 2
INTERNAL LINER
CHASSIS
COMPRESSOR
CONDENSER FAN
EVAPORATOR FAN
EVAPORATOR FAN
DOOR SURROUND HEATER (SEE NOTE 5)
CENTRE MULLION HEATER (SEE NOTE 5)
CROSS MULLION HEATER (HALF DOOR MODELS ONLY) (SEE NOTE 5)
CROSS MULLION HEATER (HALF DOOR MODELS ONLY) (SEE NOTE 5)
MAINS CONNECTOR
CABLE ACCESS
DATA ACCESS
FOSTER FD1-19 CONTROLLER (01-580690-01)
J6 DISPLAY
FOSTER REFRIGERATOR
OLDMEDOW ROAD, KING'S LYNN,
NORFOLK. PE30 4JU UNITED KINGDOM
CUSTOMER COPY
01 ORIGINAL
EP1440H
DOUBLE SECTION HIGH TEMPERATURE INTEGRAL MODEL
01-583011-00-01
SHEET 1 OF 1
NTS
03/02/'20

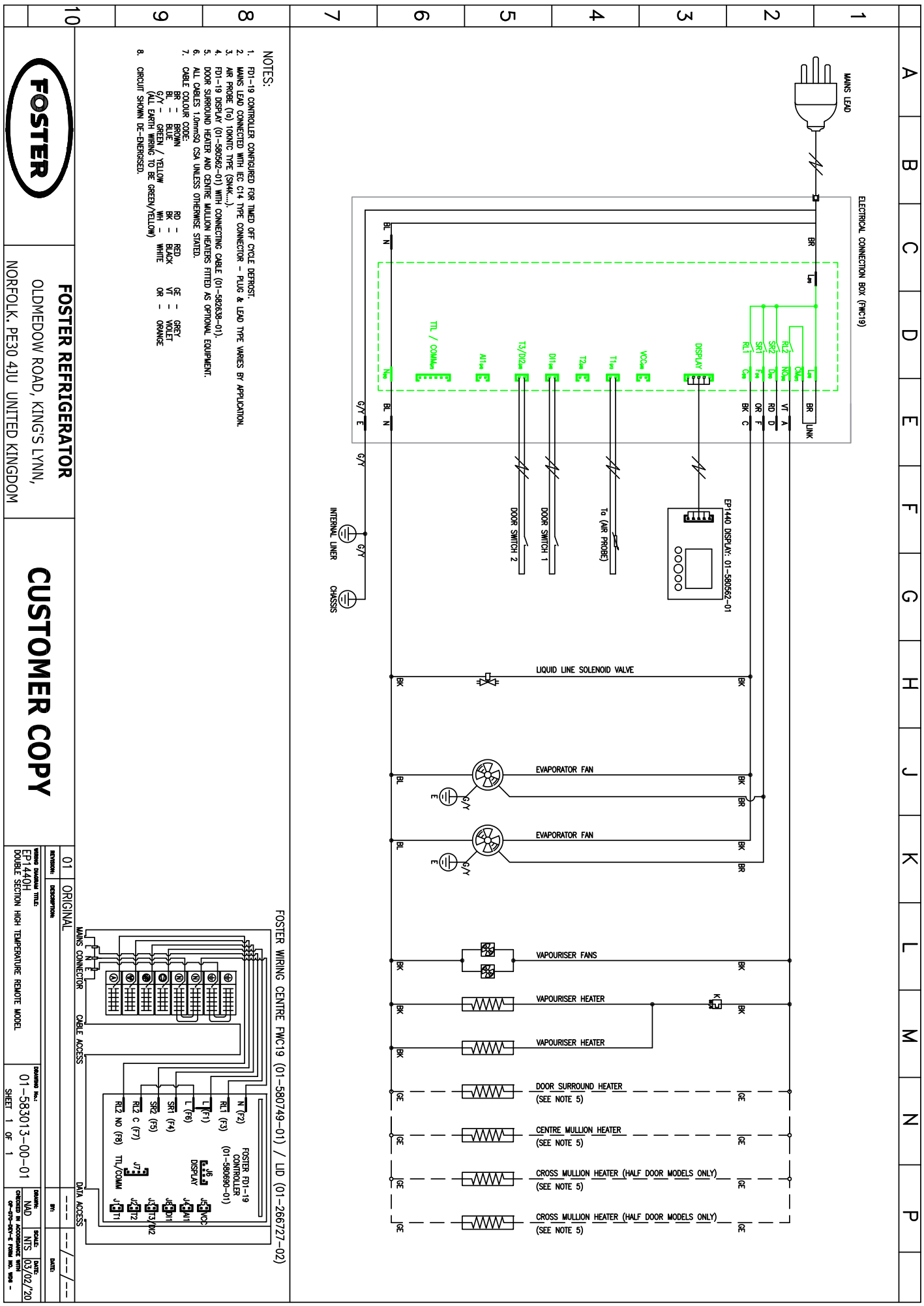
MAINS LEAD
ELECTRICAL CONNECTION BOX (FWC19)
DISPLAY
EP1440 DISPLAY: 01-580562-01
To (AIR PROBE)
DOOR SWITCH 1
DOOR SWITCH 2
INTERNAL LINER
CHASSIS
LIQUID LINE SOLENOID VALVE
EVAPORATOR FAN
EVAPORATOR FAN
VAPOURISER FANS
VAPOURISER HEATER
VAPOURISER HEATER
DOOR SURROUND HEATER
(SEE NOTE 5)
CENTRE MULLION HEATER
(SEE NOTE 5)
CROSS MULLION HEATER (HALF DOOR MODELS ONLY)
(SEE NOTE 5)
CROSS MULLION HEATER (HALF DOOR MODELS ONLY)
(SEE NOTE 5)
NOTES:
1. FD1-19 CONTROLLER CONFIGURED FOR TIMED OFF CYCLE DEFROST.
2. MAINS LEAD CONNECTED WITH IEC C14 TYPE CONNECTOR - PLUG & LEAD TYPE VARIES BY APPLICATION.
3. AIR PROBE (To) 10KNTC TYPE (SN4K-...).
4. FD1-19 DISPLAY (01-580562-01) WITH CONNECTING CABLE (01-582638-01).
5. DOOR SURROUND HEATER AND CENTRE MULLION HEATERS FITTED AS OPTIONAL EQUIPMENT.
6. ALL CABLES 1.0mmSQ CSA UNLESS OTHERWISE STATED.
7. CABLE COLOUR CODE:
BR - BROWN
BL - BLUE
G/Y - GREEN / YELLOW
(ALL EARTH WIRING TO BE GREEN/YELLOW)
RD - RED
BK - BLACK
WH - WHITE
GE - GREY
VI - VIOLET
OR - ORANGE
8. CIRCUIT SHOWN DE-ENERGISED.
FOSTER WIRING CENTRE FWC19 (01-580749-01) / LID (01-266727-02)
MAINS CONNECTOR
CABLE ACCESS
DATA ACCESS
FOSTER FD1-19 CONTROLLER (01-580690-01)
DISPLAY
TTL/COMM
FOSTER
FOSTER REFRIGERATOR
OLDMEDOW ROAD, KING'S LYNN,
NORFOLK. PE30 4JU UNITED KINGDOM
CUSTOMER COPY
01 ORIGINAL
EP1440H
DOUBLE SECTION HIGH TEMPERATURE REMOTE MODEL
01-583013-00-01
SHEET 1 OF 1
NTS
03/02/'20

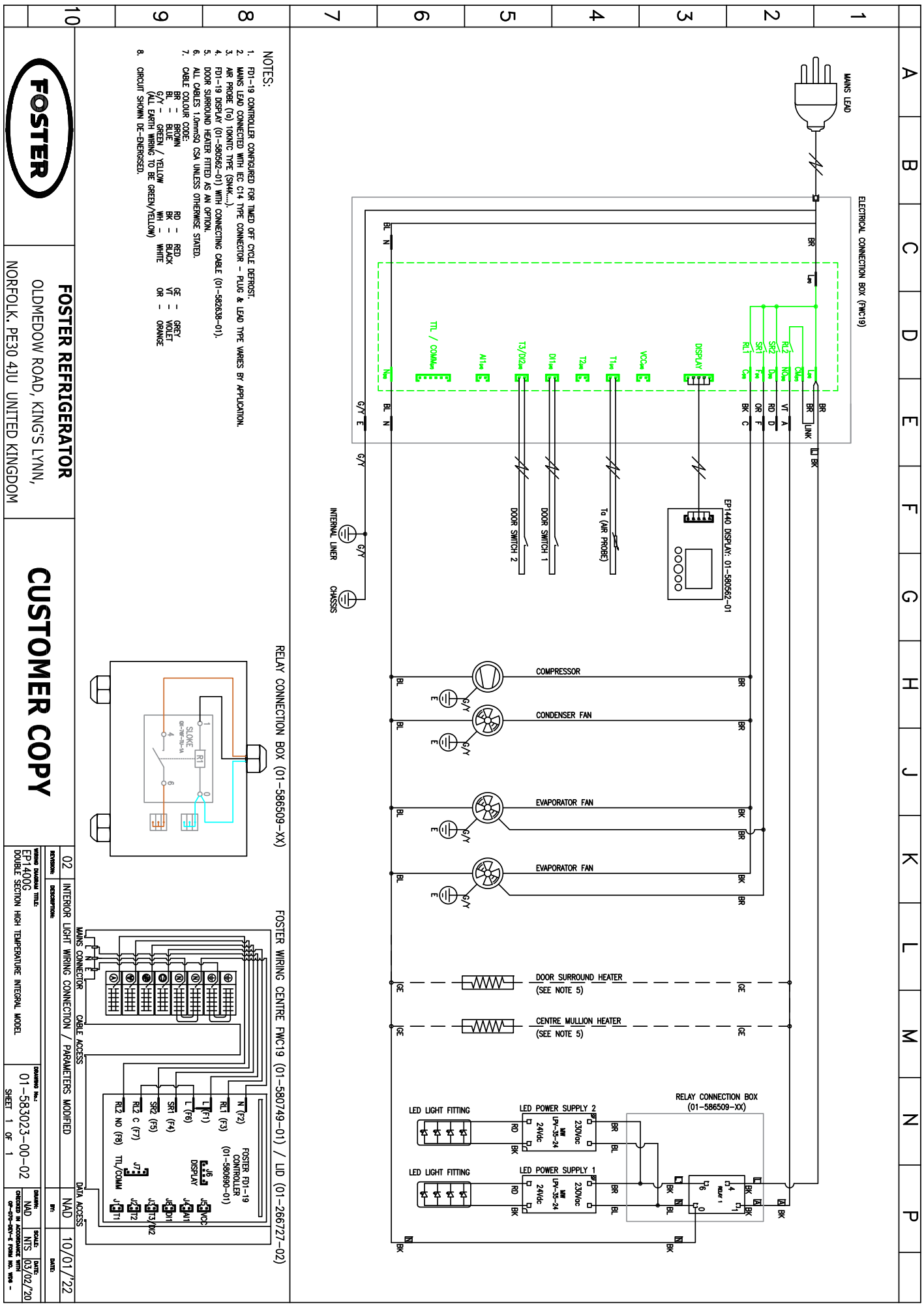
MAINS LEAD
ELECTRICAL CONNECTION BOX (FWC19)
DISPLAY
EP1440 DISPLAY: 01-580562-01
DOOR SWITCH 2
DOOR SWITCH 1
To (AIR PROBE)
INTERNAL LINER
CHASSIS
COMPRESSOR
CONDENSER FAN
EVAPORATOR FAN
EVAPORATOR FAN
DOOR SURROUND HEATER
(SEE NOTE 5)
CENTRE MULLION HEATER
(SEE NOTE 5)
LED LIGHT FITTING
LED POWER SUPPLY 2
LED LIGHT FITTING
LED POWER SUPPLY 1
RELAY CONNECTION BOX
(01-586509-XX)
NOTES:
1. FD1-19 CONTROLLER CONFIGURED FOR TIMED OFF CYCLE DEFROST.
2. MAINS LEAD CONNECTED WITH IEC C14 TYPE CONNECTOR - PLUG & LEAD TYPE VARIES BY APPLICATION.
3. AIR PROBE (To) 10KNTC TYPE (SN4K...).
4. FD1-19 DISPLAY (01-580562-01) WITH CONNECTING CABLE (01-582638-01).
5. DOOR SURROUND HEATER FITTED AS AN OPTION.
6. ALL CABLES 1.0mmSQ CSA UNLESS OTHERWISE STATED.
7. CABLE COLOUR CODE:
BR - BROWN
BL - BLUE
G/Y - GREEN / YELLOW
(ALL EARTH WIRING TO BE GREEN/YELLOW)
RD - RED
BK - BLACK
WH - WHITE
GE - GREY
VI - VIOLET
OR - ORANGE
8. CIRCUIT SHOWN DE-ENERGISED.
RELAY CONNECTION BOX (01-586509-XX)
FOSTER WIRING CENTRE FWC19 (01-580749-01) / LID (01-266727-02)
MAINS CONNECTOR
CABLE ACCESS
DATA ACCESS
FOSTER FD1-19 CONTROLLER (01-580690-01)
DISPLAY
TTL/COMM
FOSTER REFRIGERATOR
OLDMEDOW ROAD, KING'S LYNN,
NORFOLK. PE30 4JU UNITED KINGDOM
CUSTOMER COPY
02.
INTERIOR LIGHT WIRING CONNECTION / PARAMETERS MODIFIED
NAD
10/01/'22
EP1440G
DOUBLE SECTION HIGH TEMPERATURE INTEGRAL MODEL
01-583023-00-02
SHEET 1 OF 1
NAD
NTS
03/02/'20

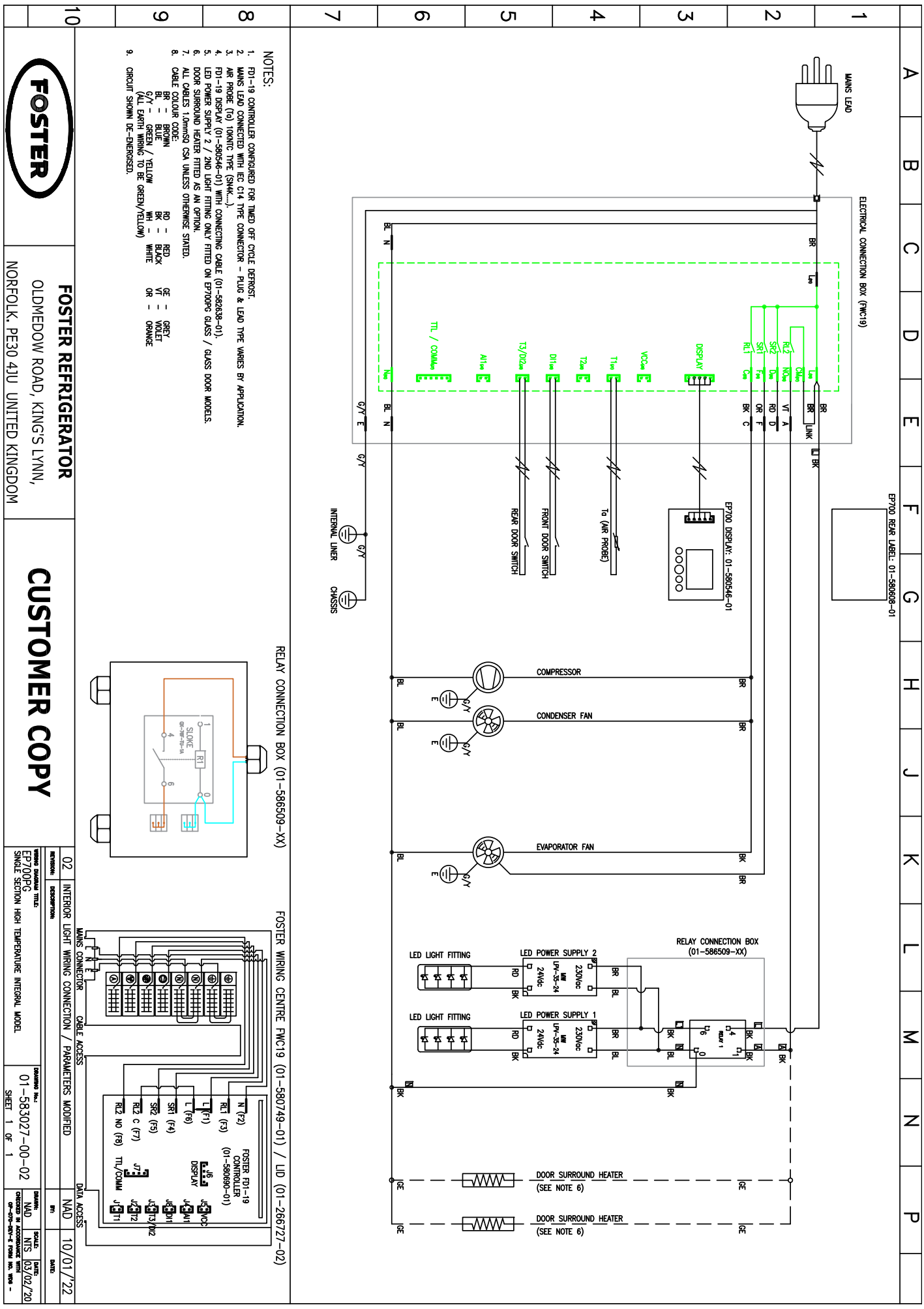
NOTES:
1. FD1-19 CONTROLLER CONFIGURED FOR TIMED OFF CYCLE DEFROST.
2. MAINS LEAD CONNECTED WITH IEC C14 TYPE CONNECTOR - PLUG & LEAD TYPE VARIES BY APPLICATION.
3. AIR PROBE (Ta) 10KNTC TYPE (SN4K...).
4. FD1-19 DISPLAY (01-580546-01) WITH CONNECTING CABLE (01-582638-01).
5. LED POWER SUPPLY 2 / 2ND LIGHT FITTING ONLY FITTED ON EP700PG GLASS / GLASS DOOR MODELS.
6. DOOR SURROUND HEATER FITTED AS AN OPTION.
7. ALL CABLES 1.0mmSQ CSA UNLESS OTHERWISE STATED.
8. CABLE COLOUR CODE:
BR - BROWN
BL - BLUE
G/Y - GREEN / YELLOW
(ALL EARTH WIRING TO BE GREEN/YELLOW)
RD - RED
BK - BLACK
WH - WHITE
GE - GREY
VT - VIOLET
OR - ORANGE
9. CIRCUIT SHOWN DE-ENERGISED.
MAINS LEAD
ELECTRICAL CONNECTION BOX (FWC19)
EP700 REAR LABEL: 01-580608-01
EP700 DISPLAY: 01-580546-01
Ta (AIR PROBE)
FRONT DOOR SWITCH
REAR DOOR SWITCH
INTERNAL LINER
CHASSIS
COMPRESSOR
CONDENSER FAN
EVAPORATOR FAN
RELAY CONNECTION BOX (01-586509-XX)
LED LIGHT FITTING
LED POWER SUPPLY 2
LED POWER SUPPLY 1
DOOR SURROUND HEATER (SEE NOTE 6)
RELAY CONNECTION BOX (01-586509-XX)
FOSTER WIRING CENTRE FWC19 (01-580749-01) / LID (01-266727-02)
FOSTER FD1-19 CONTROLLER (01-580690-01)
MAINS CONNECTOR
CABLE ACCESS
DATA ACCESS
FOSTER
FOSTER REFRIGERATOR
OLDMEDOW ROAD, KING'S LYNN,
NORFOLK, PE30 4JU UNITED KINGDOM
CUSTOMER COPY
02 INTERIOR LIGHT WIRING CONNECTION / PARAMETERS MODIFIED
NAD 10/01/'22
EP700PG
SINGLE SECTION HIGH TEMPERATURE INTEGRAL MODEL
01-583027-00-02
SHEET 1 OF 1
NTS 03/02/'20

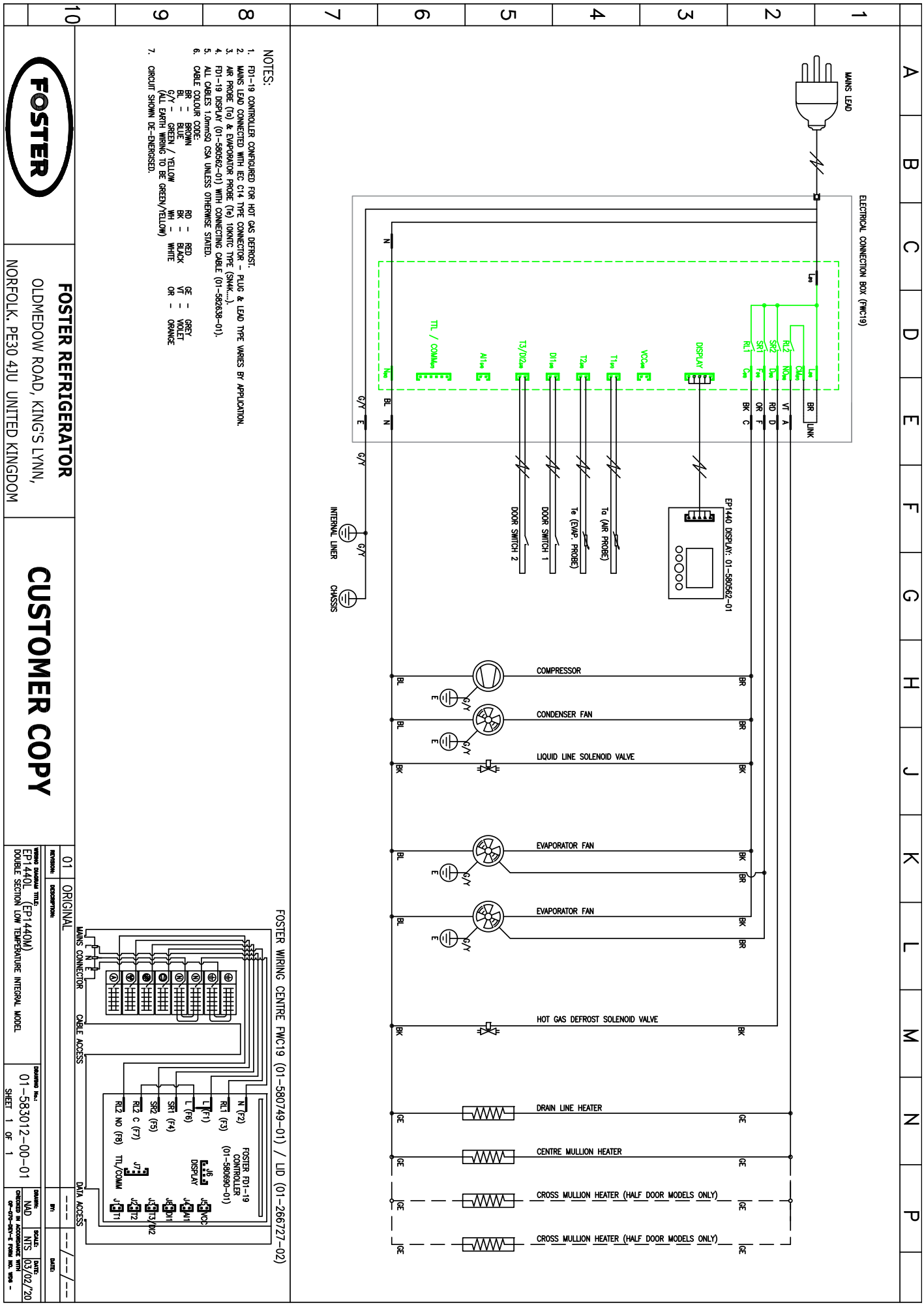
MAINS LEAD
ELECTRICAL CONNECTION BOX (FWC19)
DISPLAY
EP1440 DISPLAY: 01-580592-01
DOOR SWITCH 2
DOOR SWITCH 1
Te (EVAP. PROBE)
To (AIR PROBE)
INTERNAL LINER
CHASSIS
COMPRESSOR
CONDENSER FAN
LIQUID LINE SOLENOID VALVE
EVAPORATOR FAN
EVAPORATOR FAN
HOT GAS DEFROST SOLENOID VALVE
DRAIN LINE HEATER
CENTRE MULLION HEATER
CROSS MULLION HEATER (HALF DOOR MODELS ONLY)
CROSS MULLION HEATER (HALF DOOR MODELS ONLY)
NOTES:
1. FD1-19 CONTROLLER CONFIGURED FOR HOT GAS DEFROST.
2. MAINS LEAD CONNECTED WITH IEC C14 TYPE CONNECTOR - PLUG & LEAD TYPE VARIES BY APPLICATION.
3. AIR PROBE (To) & EVAPORATOR PROBE (Te) 10KNTC TYPE (SN4K...).
4. FD1-19 DISPLAY (01-580592-01) WITH CONNECTING CABLE (01-582638-01).
5. ALL CABLES 1.0mmSQ CSA UNLESS OTHERWISE STATED.
6. CABLE COLOUR CODE:
BR = BROWN
BL = BLUE
G/Y = GREEN / YELLOW
(ALL EARTH WIRING TO BE GREEN/YELLOW)
RD = RED
BK = BLACK
WH = WHITE
GE = GREY
VI = VIOLET
OR = ORANGE
7. CIRCUIT SHOWN DE-ENERGISED.
FOSTER WIRING CENTRE FWC19 (01-580749-01) / LID (01-266727-02)
MAINS CONNECTOR
CABLE ACCESS
DATA ACCESS
FOSTER FD1-19 CONTROLLER (01-580690-01)
DISPLAY
TTL/COMM
FOSTER REFRIGERATOR
OLDMEDOW ROAD, KING'S LYNN,
NORFOLK. PE30 4JU UNITED KINGDOM
CUSTOMER COPY
WIRING DIAGRAM TITLE: EP1440L (EP1440M) DOUBLE SECTION LOW TEMPERATURE INTEGRAL MODEL
DRAWING No.: 01-583012-00-01
SHEET 1 OF 1
REVISION: 01
DESCRIPTION: ORIGINAL
DRAWN: NAD
CHECKED:
SCALE: NTS
DATE: 03/02/'20

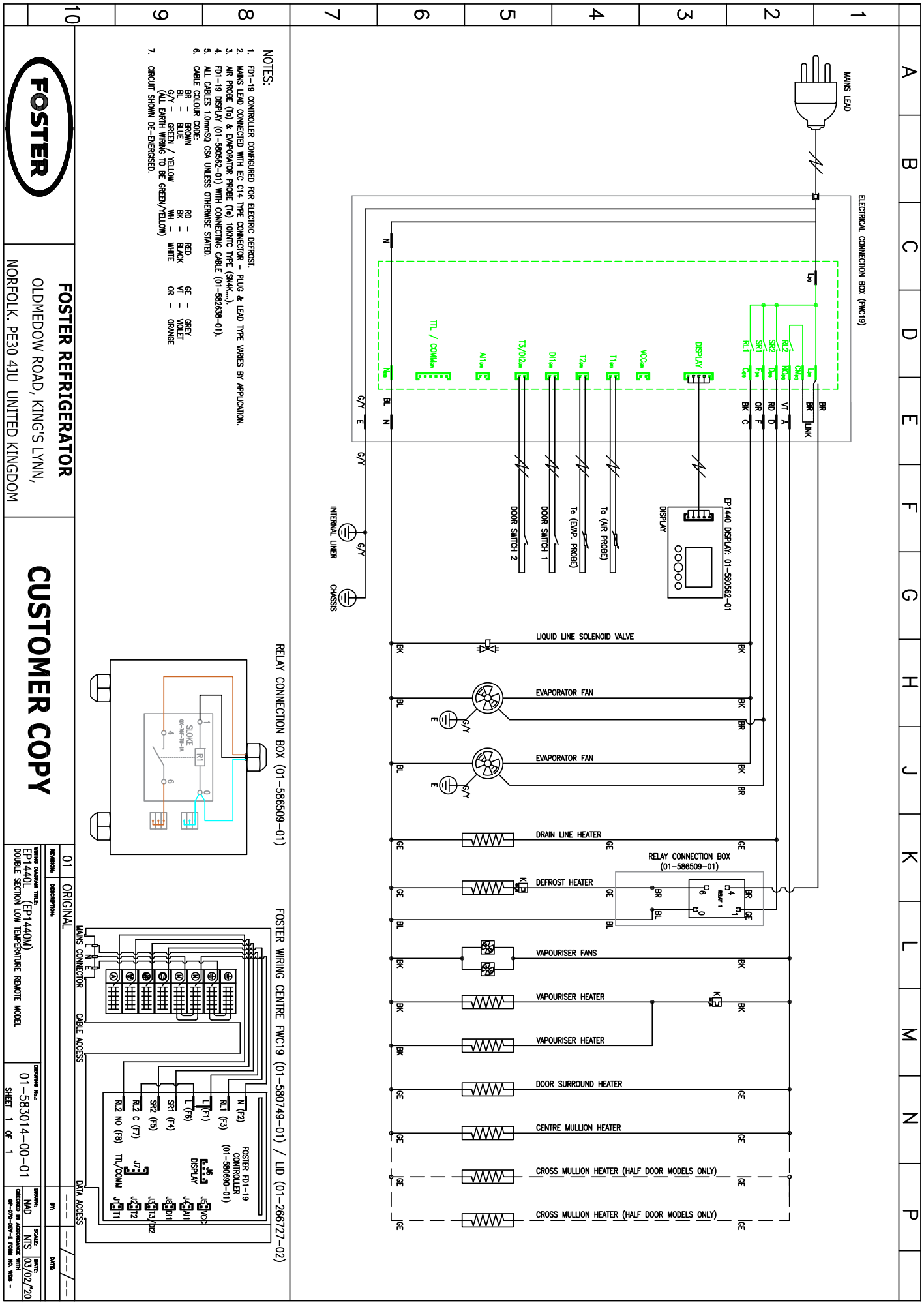
NOTES:
1. FD1-19 CONTROLLER CONFIGURED FOR ELECTRIC DEFROST.
2. MAINS LEAD CONNECTED WITH IEC C14 TYPE CONNECTOR - PLUG & LEAD TYPE VARIES BY APPLICATION.
3. AIR PROBE (To) & EVAPORATOR PROBE (Te) 10KNTC TYPE (SN4K...).
4. FD1-19 DISPLAY (01-580562-01) WITH CONNECTING CABLE (01-582638-01).
5. ALL CABLES 1.0mmSQ CSA UNLESS OTHERWISE STATED.
6. CABLE COLOUR CODE:
BR = BROWN
BL = BLUE
G/Y = GREEN / YELLOW (ALL EARTH WIRING TO BE GREEN/YELLOW)
RD = RED
BK = BLACK
WH = WHITE
GE = GREY
VI = VIOLET
OR = ORANGE
7. CIRCUIT SHOWN DE-ENERGISED.
MAINS LEAD
ELECTRICAL CONNECTION BOX (FWC19)
DISPLAY
EP1440 DISPLAY: 01-580562-01
DISPLAY
To (AIR PROBE)
Te (EVAP. PROBE)
DOOR SWITCH 1
DOOR SWITCH 2
INTERNAL LINER
CHASSIS
LIQUID LINE SOLENOID VALVE
EVAPORATOR FAN
EVAPORATOR FAN
DRAIN LINE HEATER
DEFROST HEATER
RELAY CONNECTION BOX (01-586509-01)
VAPOURISER FANS
VAPOURISER HEATER
VAPOURISER HEATER
DOOR SURROUND HEATER
CENTRE MULLION HEATER
CROSS MULLION HEATER (HALF DOOR MODELS ONLY)
CROSS MULLION HEATER (HALF DOOR MODELS ONLY)
RELAY CONNECTION BOX (01-586509-01)
FOSTER WIRING CENTRE FWC19 (01-580749-01) / LID (01-266727-02)
MAINS CONNECTOR
CABLE ACCESS
FOSTER FD1-19 CONTROLLER (01-580690-01)
DISPLAY
DATA ACCESS
FOSTER REFRIGERATOR
OLDMEDOW ROAD, KING'S LYNN,
NORFOLK. PE30 4JU UNITED KINGDOM
CUSTOMER COPY
WIRING DIAGRAM TITLE: EP1440L (EP1440M) DOUBLE SECTION LOW TEMPERATURE REMOTE MODEL
DRAWING No.: 01-583014-00-01
SHEET 1 OF 1
REVISION: 01
DESCRIPTION: ORIGINAL
DRAWN: NAD
CHECKED:
DATE: 03/02/'20
SCALE: NTS

By Appointment to
Her Majesty Queen Elizabeth II
Suppliers of Commercial Refrigeration
Foster Refrigerator, King's Lynn

FOSTER
The Refrigeration Experts

For more information:
+44 (0) 1553 698485
regional@foster-gamko.com
fosterrefrigerator.com

For service and spares:
For service +44 (0) 1553 780333
service@foster-gamko.com
For parts +44 (0) 1553 780300
parts@foster-gamko.com

Document ID code: 00-570505 v1