RB195AB
RB197AB
RB215AB
RB217AB

Refrigerator
user manual

English

imagine the possibilities

Thank you for purchasing this Samsung product.
To receive more complete service,
please register your product at
www.samsung.com/register

ENERGY STAR

SAMSUNG

Features of your new Refrigerator

KEY FEATURES OF YOUR NEW REFRIGERATOR

Your Samsung Refrigerator comes equipped with various innovative storage and energy-efficient features.

- **Twin Cooling System**
  The Refrigerator and Freezer have separate evaporators. Due to this independent cooling system, the Freezer and Refrigerator cool more efficiently.
  Additionally, this separate air flow system prevents food odor of one compartment from seeping into other compartments.
- **Bigger & Wider Space**
  The wide shelf area provides enough space for larger items.
  The wide freezer drawer also provides enough space for 2~3 turkeys.
- **Secure Auto Close**
  The Secure Auto Close feature will automatically close a door that is slightly open.
- **Digital Display and Temperature Control**
- **Door Alarm**
  A helpful beeper alerts you if a door is ajar.
- **Easy Handle**
  Freezer door can be opened with less effort.
- **Energy Star**
  This Energy star labeled product may save you money on your energy costs.

SAMSUNG

For easy future reference, write the model and serial number down. You will find your model number and serial number on the left side of the refrigerator.

Model # _____

Serial # _____

Safety Information

SAFETY INFORMATION

Before using your new Samsung Refrigerator, please read this manual thoroughly to ensure that you know how to safely and efficiently operate the features and functions that your new appliance offers.
Because the following instructions cover RB195AB, 197AB, 215AB & 217AB, the characteristics of your Refrigerator may differ slightly from the Refrigerator described in this manual. If you have any questions, contact us at 1-800-SAMSUNG or find help and information online at www.samsung.com.

What the icons and signs in this user manual mean :

WARNING	Hazards or unsafe practices that may result in **severe personal injury or death**.
CAUTION	Hazards or unsafe practices that may result in **minor personal injury or property damage**.
CAUTION	To reduce the risk of fire, explosion, electric shock, or personal injury when using your refrigerator, follow these basic safety precautions:

	Do NOT attempt.
	Do NOT disassemble.
	Do NOT touch.
	Follow directions explicitly.
	Unplug the power plug from the wall socket.
	Make sure the machine is grounded to prevent electric shock.
	Call the service center for help.
	Notice

These warning signs are here to prevent injury to you and others.
Please follow them explicitly.
Keep this manual in a safe place for future reference.

❑ *For Refrigerator Installation*

SEVERE WARNING SIGNS WARNING

Do not damage parts containing Refrigerant. If they are damaged, it may cause a fire or explosion. Do not touch the refrigerator if it is damaged. Follow the items below and contact the store where the refrigerator was purchased or a Samsung Appliance Service Center. (Tel 1-800-SAMSUNG)

1. Open the windows and air the room. (Do not use a ventilating fan.)
2. Avoid using flammable or electric appliances.

Safety Information

SEVERE WARNING SIGNS WARNING - CONT'D

Do not install the Refrigerator in a damp place or place where it may come in contact with water.

- Wet and/or deteriorated insulation of the internal electrical parts may cause electric shock or fire.

The Refrigerator must be safely grounded

- Always make sure that you have grounded the Refrigerator before attempting to investigate or repair any part of the appliance. Power leakages can cause severe electric shock.

Never use gas pipes, telephone lines or other potential lightning attractors as an electrical ground.

- Improper use of the grounding plug can result in a risk of electric shock. If it is necessary to use an extension cord to power the Refrigerator, use only a 3-wire extension cord that has a 3-blade ground plug and a 3-slot receptacle that will accept the plug on the appliance. The marked rating of the extension cord should be AC 115V~120V, 10A, or more. Additionally, if a grounding adapter is used, make sure the receptacle box is also fully grounded.

The appliance must have sufficient space around it. (Refer to page 10 for the best location.)

- When refrigerant leaks, it is possible to cause a fire or explosion.

CAUTION SIGNS CAUTION

Do not place the refrigerator directly in sunlight.

The appliance must be positioned for easy access to power source.

The appliance must be placed on the level surface of hard material.

- Placing on an unlevel surface may cause it to tip over, resulting in injury or property damage.

Do not use casters under the Refrigerator on a surface that is easily damaged.

- When moving the Refrigerator, spread out a protector such as cardboard carton under the Refrigerator. (Refer to page 10 for flooring.)

Safety Information

❑ *Power Plug*

Contact the retailer where you purchased the appliance for if you have a power plug problem.

SEVERE WARNING SIGNS WARNING

Do not plug several appliances into the same power receptacle.

- Large appliances draw a lot of power. Powering more than one appliance or machine from a single power source could cause overheating and a fire.

Make sure that the power plug is not kinked or damaged by the back of the Refrigerator.

- A damaged power plug may overheat and cause a fire.

Do not handle the power plug with wet hands.

- It may cause an electric shock.

Insert the power plug into the socket completely.

- Incomplete inserting may cause a fire by electric shock or heat.

Do not use the power plug if the plug or power cord is damaged.

- It may cause a fire or electric shock.

Do not damage power plug or cord, or push the Refrigerator backward.

- Bending and binding the power cord, or pushing Refrigerator backward may cause a fire or electric shock by wire damage.

Do not put undue stress on the power cord or place heavy articles on it.

- Placing heavy articles on the power cord may create the risk of explosion or fire.

Do not use the loose socket.

- There is a risk of electric shock or fire. Have the plug looked at by a licensed electrician.

Never unplug your Refrigerator by pulling on the power cord.

- Always grip the power cord firmly and pull straight out from the outlet. Yanking or pulling on the power cord may cause a short-circuit, fire and/or electric shock.
- A damaged power cord must be replaced by the manufacturer, a certified service agent or qualified service personnel.

CAUTION SIGNS CAUTION

Do not use a wet or damp cloth when cleaning the plug.

Remove any dust or foreign matter from the power plug pins.

- A dirty power plug can increase the risk of fire.

If the power cord is damaged, it must be replaced by the manufacturer, a certified service agent or qualified service personnel.

Safety Information

❑ *For Usage of Refrigerator*

SEVERE WARNING SIGNS WARNING

Do not spray water directly into or on the outside of the Refrigerator/Freezer drawer.
- Water could get into the interior machine parts and cause electric shock.

Do not use aerosols near the Refrigerator.
- Aerosols used near the Refrigerator may cause an explosion or fire.

Do not store volatile or flammable substances in the Refrigerator.
- Storing benzene, thinner, alcohol, ether, LP gas and other such products may cause explosions.

Do not store pharmaceutical products, scientific materials and temperature-sensitive products in the refrigerator.
- Products that require exact temperature controls should not be stored in the Refrigerator.

Do not put a container filled with water without cap on the Refrigerator.
- If it spills, it may cause fire or electric shock.

Do not store articles on the top of the appliance.
- When you open or close the door, the articles may fall and cause personal injury and /or damage to surrounding objects.

Do not put your hands or legs/foot under the appliance.
- Any sharp edges may cause personal injury.

Do not use any electric appliance inside the refrigerator.
- In case of refrigerant leak, it may cause a fire and explosion.

Do not touch the Refrigerator or power plug, and air the room with opening window if any flammable gas (propane gas, city gas, etc.) leaks.
- An explosion may occur due to a electrical contact spark and cause fire or injury.

Do not disassemble or repair the Refrigerator by yourself.
- You may run the risk of fire, appliance malfunctions and/or personal injury. Call your nearest service center for help from a qualified service technician.

Unplug the Refrigerator and stop the operation if there is any problem or failure.

Safety Information

SEVERE WARNING SIGNS WARNING - CONT'D

Unplug the Refrigerator when it is checked for problem.

Unplug the Refrigerator before changing the interior light.

- Changing the light while the Refrigerator is plugged in may cause electric shock.

If the Refrigerator will not be used for a long period of time (for example, over several months), unplug the power from the wall.

- Over time, deterioration in the power cord insulation may cause fire.

Do not overfill the Refrigerator with food and drinks.

- In an overfull Refrigerator, heavy, fragile, bulky or breakable items may fall out and cause personal injury and/or damage to surrounding objects.

Do not put bottles or glass containers in the Freezer drawer.

- When the contents freeze and then expand, the glass may break and cause personal injury or leave dangerous glass shards in the Freezer.

Do not allow children to climb, stand or hang on shelves and handles of the Refrigerator. They could damage the Refrigerator and seriously injure themselves. Do not sit on the freezer door. The door may break.Do not allow children to climb into the freezer basket.

If you notice a chemical or burning plastic smell or see smoke, unplug the Refrigerator immediately and contact your Samsung Electronics Service Center.

After your Refrigerator is in operation, do not touch the cold surfaces in the Freezer compartment. Particularly when hands are damp or wet, skin may adhere to these extremely cold surfaces.

- Skin may stick to the surface and you may get frostbite.

Do not touch the rails of freezer drawer. (RB217, RB197)

- When the drawer is moving, a finger can be caught by the rail and get injured.

CAUTION SIGNS CAUTION

If the Refrigerator is disconnected from the power supply, you should wait for at least five minutes before plugging it back in.

If you have a long vacation planned, empty the Refrigerator and turn it off.

- Wipe excess moisture from the inside and leave the doors open to keep odor and mold from developing.

CAUTION SIGNS CAUTION - CONT'D

Service warranty and Modification

- Any changes or modifications performed by a 3rd party on this finished appliance is not covered under Samsung warranty service, nor can Samsung be responsible for safety issues that result from 3rd party modifications.

Children can get trapped inside Refrigerators.

Before you throw away your old Refrigerator or Freezer, make sure that you;

- Take off the doors.
- Leave all shelves in places so that children may not easily climb inside and shut the door while they are inside.

This appliance is not intended for use by small children or infirm persons without capable, adult supervision. Small children should be supervised when using the appliance.

❑ *When Moving or Transporting the Refrigerator*

SEVERE WARNING SIGNS WARNING

Do not damage the refrigerant circuit around the refrigerator.

If it is damaged, the refrigerant may leak and cause a fire and explosion.

Do not touch the refrigerant if it is damaged, and follow the below items and contact the store where you buy it or Samsung Appliance SVC Center (Tel : 1-800-SAMSUNG).

1. Open the windows and air the room. (Do not use the ventilating fan.)
2. Avoid to use the flammable or electric appliances as possible.

Contents

SETTING UP YOUR REFRIGERATOR

10

10 Getting ready to install the refrigerator
11 Installation of the water line
13 Setting up the refrigerator
13 Removing the refrigerator doors
16 Leveling the refrigerator

OPERATING YOUR SAMSUNG REFRIGERATOR

17

17 Parts and Features
18 Using the control panel
19 Controlling the temperature
22 Storing food in the refrigerator
22 Storing food in the freezer drawer
23 Removing and relocating the refrigerator accessories
24 Removing the freezer accessories
25 Cleaning the refrigerator
26 Changing the interior lights

TROUBLESHOOTING

27

27 Troubleshooting

WARRANTY

28

28 Warranty

Setting up your Refrigerator

GETTING READY TO INSTALL THE REFRIGERATOR

Congratulations on your purchase of this Samsung Refrigerator. We hope you enjoy the state-of-art features and efficiencies that this new appliance offers.

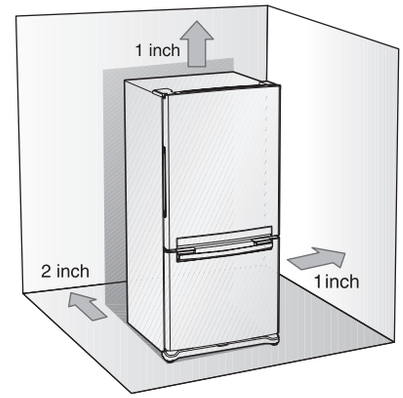

Selecting the best location for the Refrigerator

- A location with easy access to the water supply.
- A location without direct exposure to sunlight.
- A location with level (or nearly level) flooring.
- A location with enough space for the Refrigerator doors to open easily.
- Allow sufficient space for air circulation of the internal cooling system. If the Refrigerator does not have enough space, the internal cooling system may not work properly.

First thing! Make sure that you can easily move your Refrigerator to its final location by measuring doorways (both width and height), thresholds, ceilings, stairways, etc.
The following chart details the exact height and depth of Samsung Refrigerator.

Model		RB195AB RB197AB	RB215AB RB217AB
Capacity (cu.ft)		18.7	20.5
Width (inch)		32 1/4	
Depth (inch)	with door	28 1/4	30 1/8
	without door	24 3/4	26 3/4
Height (inch)		70	

- Allow clearance to the right, left, back and top when installing. This will help reduce power consumption and keep your energy bills lower.
- If you install the Refrigerator where is below 50ºF (10ºC), it may not function in optimum level.

CAUTION When moving your refrigerator
To prevent floor damage be sure the front leveling legs are in the up position(above the floor).
Refer to 'Leveling the refrigerator' in the manual (on page 16)

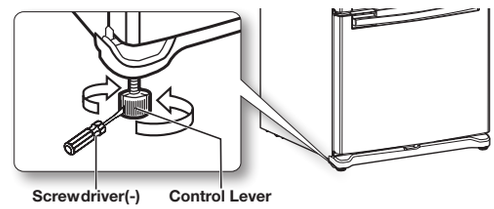

FLOORING

For proper installation, this refrigerator must be placed on a level surface of hard material that is the same height as the rest of the flooring. This surface should be strong enough to support a fully loaded refrigerator, or approximately 223lbs(106kg). To protect the finish of the flooring, cut a large section of the cardboard carton and place under the refrigerator where you are working. When moving the refrigerator, be sure to pull it straight out and return it to position by pushing it straight in.

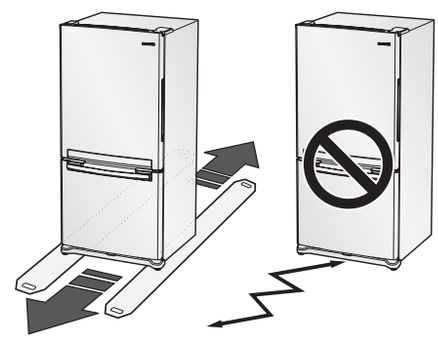

INSTALLATION OF THE WATER LINE

Before You Install the water line

- The water line installation is not warranted by the refrigerator manufacturer.
  So before you install the water line, read the whole steps for installing and follow these instructions carefully to minimize the risk of expensive water damage.
- Banging pipes (water banging in the pipes) in house plumbing can cause damage to fridge parts and lead to water leakage or flooding. Call a qualified plumber to correct the problem before installing the water supply line to the fridge.
- To prevent burns and product damage, do not hook up the water line to the hot water line.
- Do not install the water line in areas where temperatures fall below freezing.
- When using any electrical device (such as a power drill) during installation, be sure the device is insulated or wired in a manner to prevent electric shock.
- All installations must be in a accordance with local plumbing code requirements.

- Water line Kit and water filter are not covered by Samsung's Warranty. The manufacturer (or dealer, installer) of them is responsible for any defects and all the loss caused by water filter & water line kit .
- The filter should be replaced should be replaced according to manufacturer (or dealer)'s instruction.
- To order additional water filters, please contact the manufacturer (or dealer) of the filter.

Using the water filter (not provided)

Connecting to water supply line

- Shut off the main water supply line and turn the Ice maker to the off position.
- Locate the nearest cold drinking water line.
- Follow the instructions in the water filter installation kit.
- After connecting the water supply line to the Cartridge Holder inlet and installing the Filter Cartridge (insert plastic line in fully).
- Turn on water supply and Flush 3 gallons through filter before use (flush approximately 6 minutes)

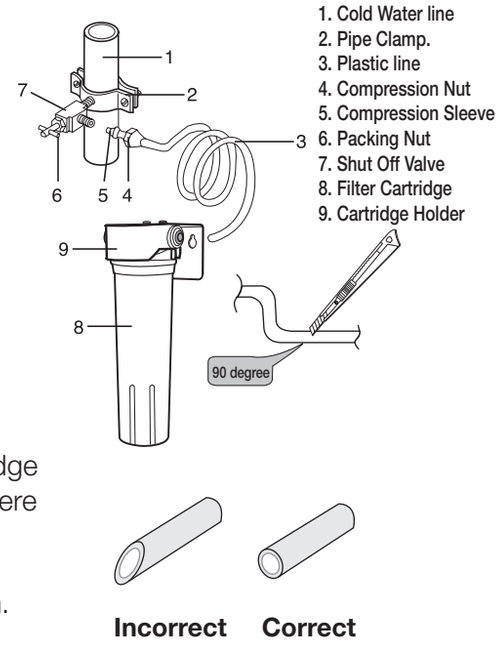

- The water filter must be installed outside the refrigerator.
  It is not provided with your new refrigerator. The filter cartridge (**8**) and holder (**9**) kit can be purchased from the retailer where you purchased this refrigerator.
- Do not use copper line.
- Cut the tubing, making sure the ends are square and clean.

Incorrect **Correct**

Setting up your Refrigerator

Connect the water line to the fridge

- Connect the plastic line on the back of your fridge to the cartridge holder outlet (fully insert the plastic line to the cartridge holder outlet).
- Insert plastic clip to the cartridge holder inlet and outlet.
- Turn water on and check for any leakage.

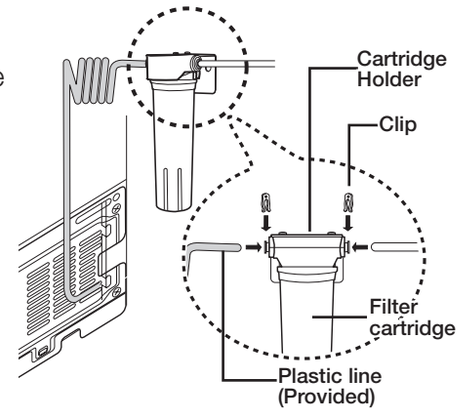

- You can purchase the necessary filter cartridge at the retailer where you purchased this refrigerator. Make sure you buy the SAMSUNG filter cartridge (Replacement cartridge No : DA29-00015A) to ensure the best performance.
- Water line must be connected to drinkable water only
- A compression fitting and nut kit is supplied with the unit and it is inside the fridge drawer.
- When pushing the Refrigerator back, make sure you don't roll over the power cord or water line(Icemaker supply line)

To use without the water filter

Connecting to the water supply line

- Shut off the main water supply line and turn the Ice maker to the off position.
- Locate the nearest cold water drinking line.

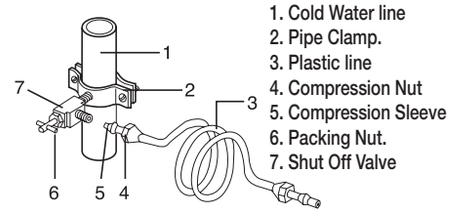

Connect the water line to the fridge

1) Slip the compression nut through the plastic tubing.
2) After inserting the compression nut into plastic tubing, tighten the compression nut onto 1/4" compression fitting(Provided).

Do not overtighten the compression nut.

- Using Copper Tubing
  - Slip the compression nut and ferrule on copper tubing as shown.
- Using Plastic Tubing
  - Insert the molded end(Bulb) of the plastic tubing into the compression fitting.

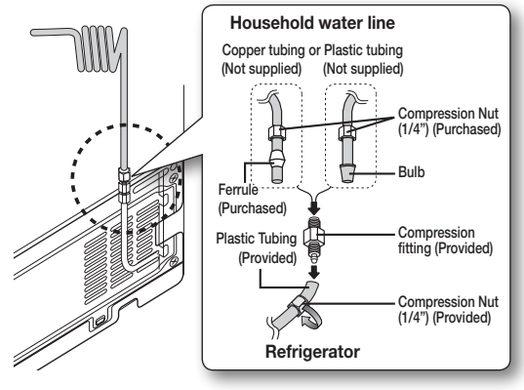

CAUTION Do not use without the molded end(Bulb) of the plastic tubing.

3) Tighten the compression nut onto the compression fitting.
4) Turn water on and check for any leakage.

- You can purchase the necessary filter cartridge at the retailer where you purchased this refrigerator. Make sure you buy the SAMSUNG filter cartridge (Replacement cartridge No : DA29-00015A) to ensure the best performance.
- Water line must be connected to drinkable water only.
- When pushing the Refrigerator back, make sure you don't roll over the power cord or water line (Icemaker supply line).

SETTING UP THE REFRIGERATOR

Now that you have your new Refrigerator installed in place, you are ready to set up and enjoy the features and functions of the appliance. By completing the following steps, your Refrigerator should be fully operational.

1. Place the Refrigerator in an appropriate location with reasonable clearance between the wall and the Refrigerator. Refer to installation instructions in this manual. (P8. Selecting the best location for the Refrigerator)
2. Once the Refrigerator is plugged in, make sure the interior light comes on when you open the doors.
3. Set the Temperature control to the coldest temperature and wait for an hour. The Freezer will get slightly chilled and the motor will run smoothly.
4. After powering the Refrigerator, it will take a few hours to reach the appropriate temperature. You can store food and drinks in the Refrigerator after the temperature is sufficiently cool.

Check the accessories listed below.



Compression fitting
(DA62-00305A)



Compression nut
(DA74-00070B)

Required Tools (Not provided)

Phillips Head Driver(+)

Flat Head Driver(-)

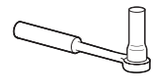

Socket Wrench
(10mm) (for bolts)



Hex Wrench (3/16inch)
(for Mid hinge)



Hex wrench (5/32 inch)
(for Mid hinge shaft)

REMOVING THE REFRIGERATOR DOORS

Some installations require door/drawer removal to transport the Refrigerator to its final location.
Do not remove the door/drawer if it is not needed. Before removing the door/drawer make sure you read following items.

WARNING Disconnect power to the Refrigerator before remove door or drawer.

- Be careful not to drop the door and door scratch and damage while removing the door/drawer.
- Be careful not to get injured while removing the door/drawer.
- After reattaching the door/drawer:
  It is possible to have sweat by air leakage.
  It is possible to have uneven door alignment.
  It is possible to have more energy bills.

Setting up your Refrigerator

Removal of the fridge door

WARNING Be careful not to drop and scratch the fridge door while removing the fridge door!

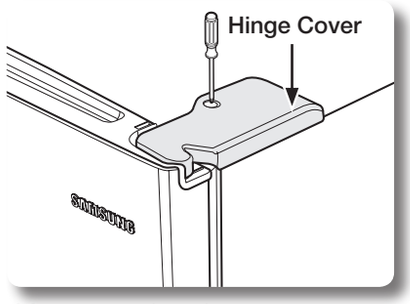

1. After removing the screw, remove the upper Hinge Cover.

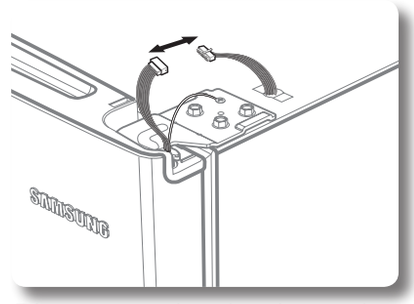

2. Disconnect electric wire on the top of the refrigerator.

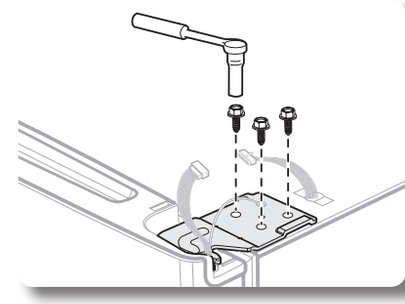

3. With the 10mm wrench, remove the three bolts that hold the hinge on the top of the refrigerator.

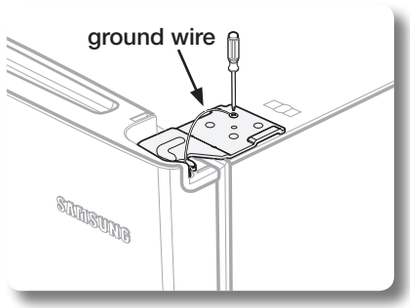

4. Remove the screw that holds the ground wire.

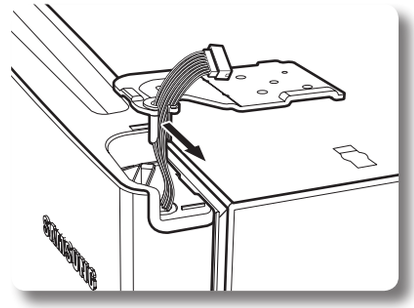

5. Separate Hinge from electric wire and ground wire as shown above.

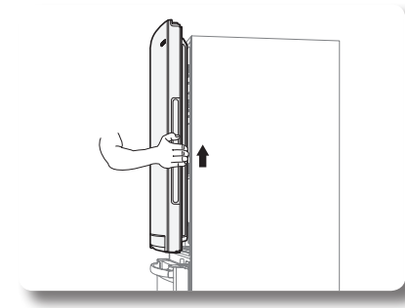

6. Remove the fridge door by lifting it upward.
   Be careful not to drop and scratch the fridge door.

Removal of the freezer door (SWING TYPE - RB215,RB195)

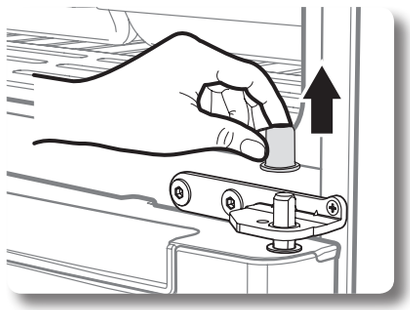

1. Separate the Cap on the Middle Hinge.

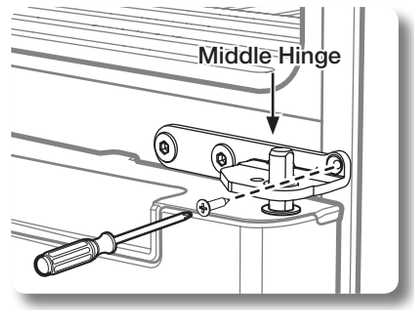

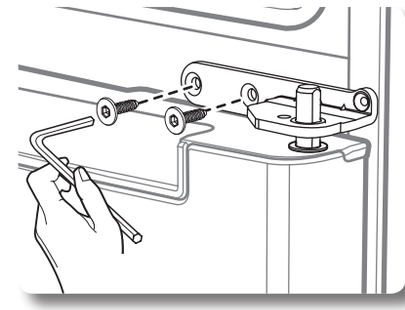

2. After removing one screw and two bolts, remove the Middle Hinge. (Unscrew the screws with the screwdriver(+) and hex bolts with the 3/16inch hex wrench.)

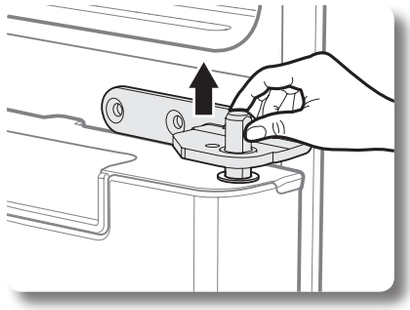

3. Remove the Middle Hinge connected to the Freezer.

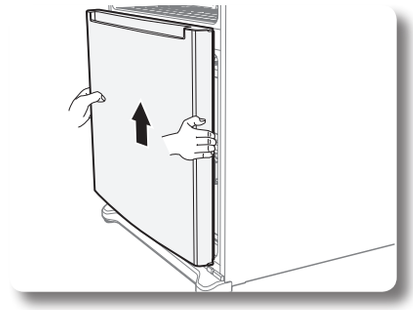

4. Remove the Freezer door by lifting it upward.
   Be careful not to drop and scratch the Freezer door

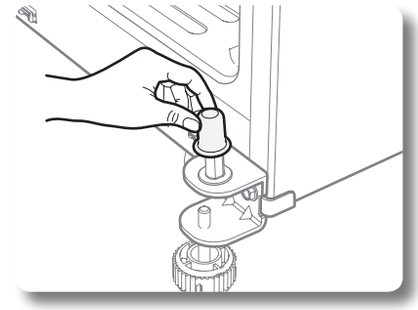

5. Remove the Cap on the Bottom Hinge.

Removal of the freezer door (DRAWER TYPE - RB217,RB197)

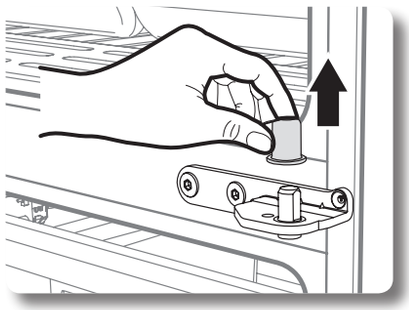

1. Separate the Cap on the Middle Hinge.

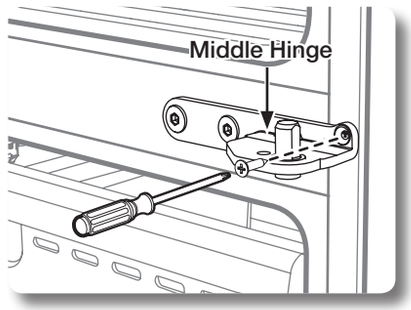

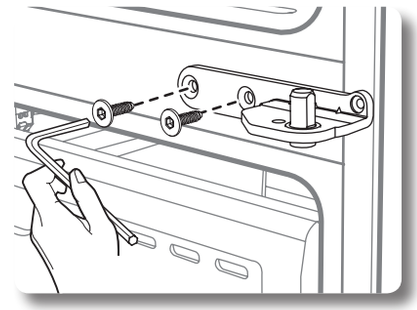

2. After removing one screw and two hex bolts, remove the Middle Hinges. (Unscrew the two hex bolts with the 3/16inch hex wrench.)

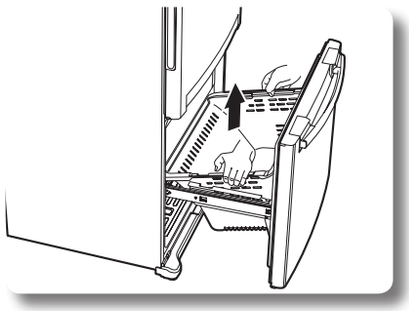

3. After opening the Freezer door, remove the drawer box.

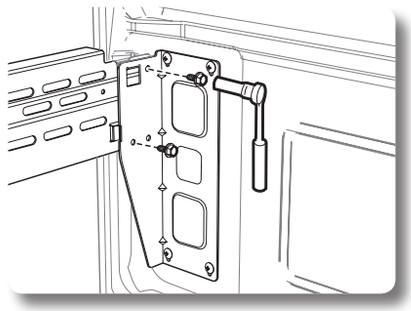

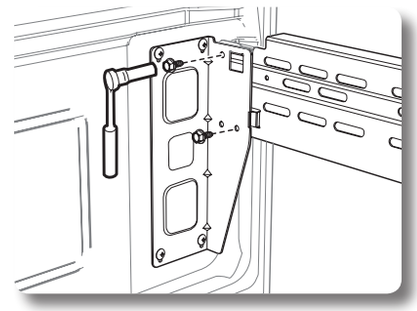

4. With the 10mm wrench, remove two bolts connecting the rail with the door.

Setting up your Refrigerator

Removal of the freezer door (DRAWER TYPE - RB217,RB197) - CONT'D

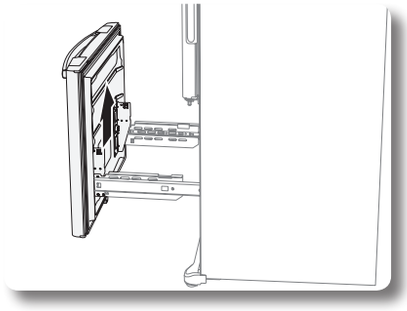

5. Remove the Freezer door from the rails.

LEVELING THE REFRIGERATOR

After putting the doors back on the Refrigerator, make sure the Refrigerator is level so that you can make final adjustments.
If the Refrigerator is not level, it will not be possible to get the doors perfectly even.
Also it is possible to sweat in the refrigerator and ask more energy bills.

For example, when the left side is lower than the right side, insert a flat-blade screwdriver into a notch on the left control lever, and turn it clockwise or counter clockwise to level the door.
Turning it clockwise to raise the refrigerator and counterclockwise to lower it.
For the left side is higher, do it with right lever.

WARNING Both control levers must be surely touching the floor to avoid the possible personal injury or property damage because of tipping.

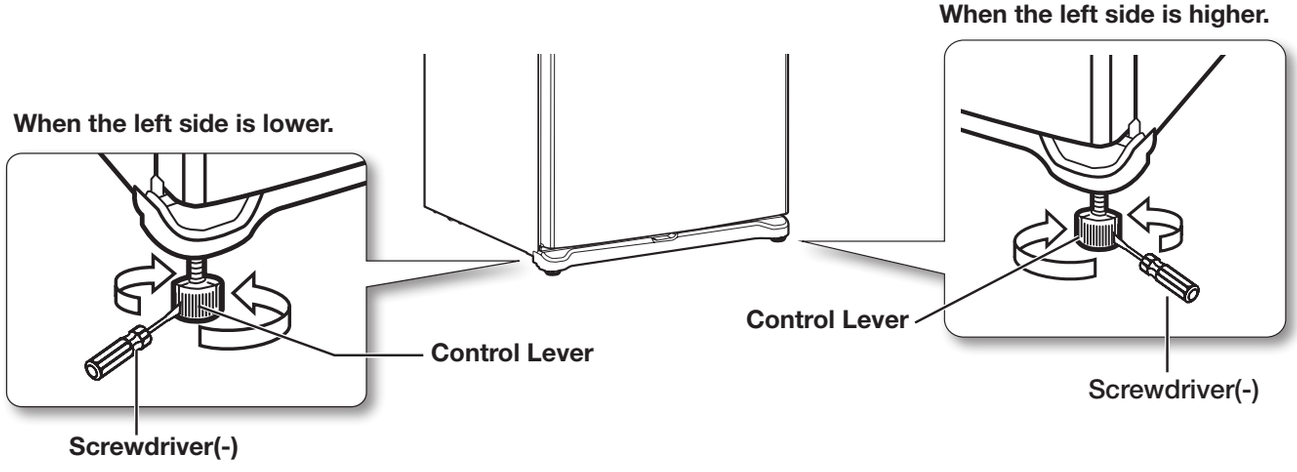

Operating your SAMSUNG Refrigerator

PARTS AND FEATURES

Use this page to become more familiar with the parts and features of the Refrigerator.

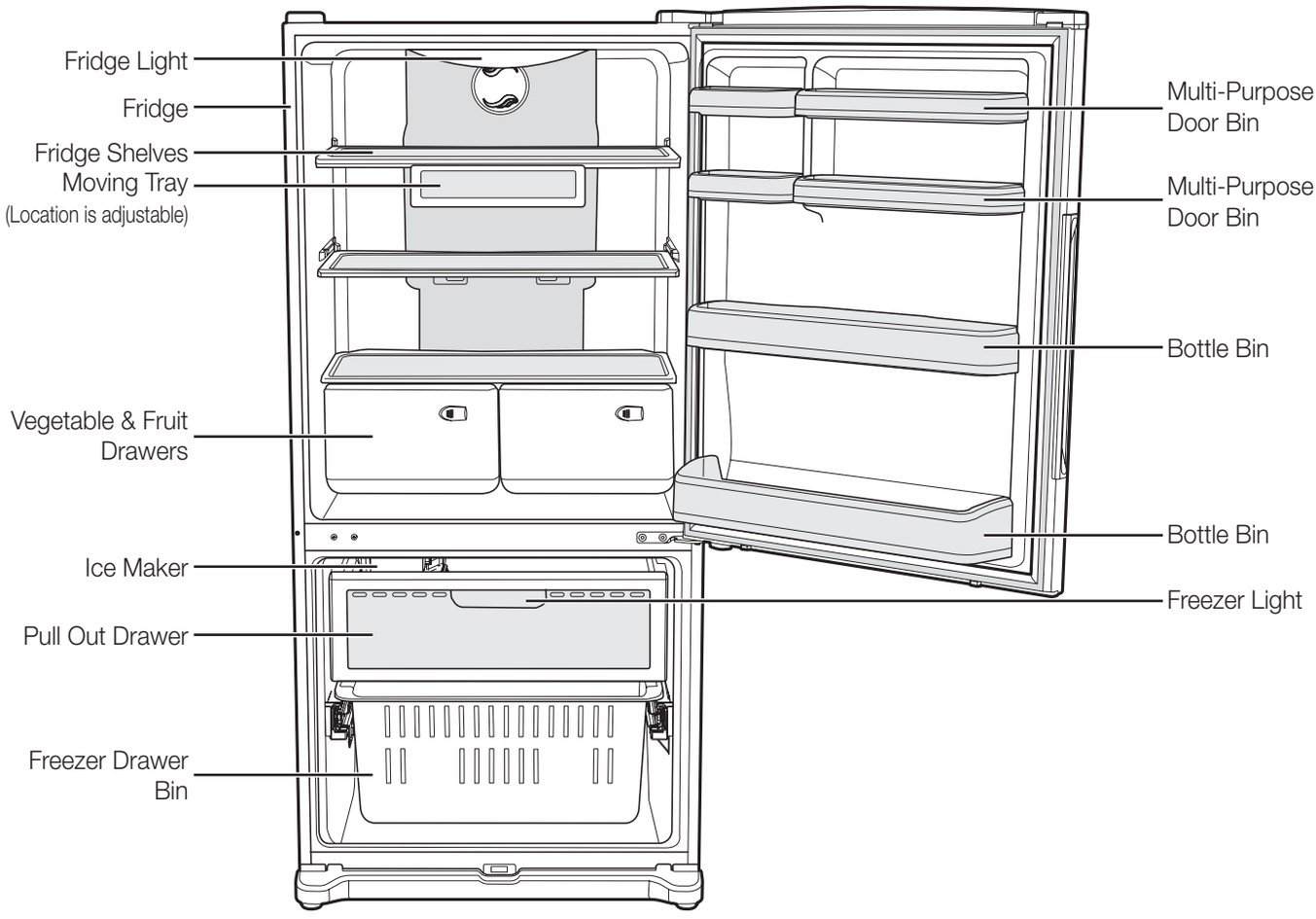

Operating your SAMSUNG Refrigerator

USING THE CONTROL PANEL



Temperature & Function select / control panel

(1) Power Freeze Button	Press this button to freeze food quickly. (Power Freeze will last 2 and a half hours.)
(2) Freezer Button	Freezer temperature set button. Press this button to set the Freezer temp between -2ºF and -14ºF. (At initial power on, the default setting is -2ºF.)
(3) Ice Off Button	When the **Ice Off Button** is pressed, ice will not be produced. Use this function only when it is needed.
(4) Power Cool Button	Press this button to cool the food in the fridge quickly. (Power Cool will shut off when 25ºF is reached or after 2 and a half hours.
(5) Fridge Button	Fridge temperature set button. Press this button to set the Fridge temperature in 2ºF intervals between 46ºF and 34ºF. (At initial power on, the default setting is 38ºF.)
(6) Child Lock Hold 3 sec Button	When pressing this button for 3 sec., the display function is locked or unlocked. (Key lock or unlock)

CONTROLLING THE TEMPERATURE

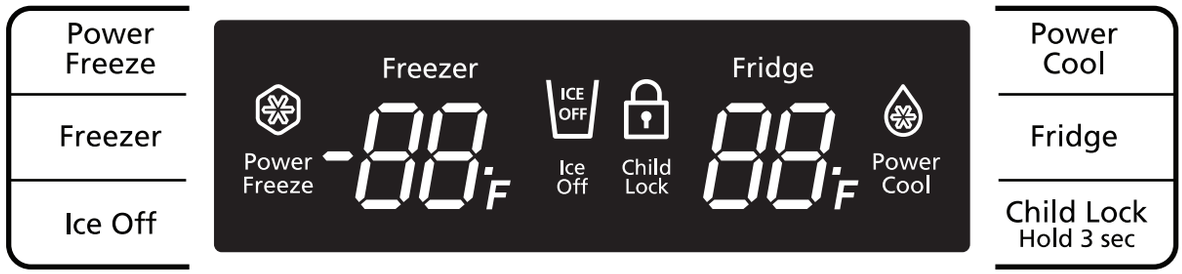

Setting the freezer temperature

If you want to control the freezer temperature, follow as below.

Press the **Freezer** Button (Refer the picture)

- The temperature can be set in 2ºF interval between -14ºF and 8ºF.
- Each time the **Freezer** Button is pressed, the temperature setting will change as follows;
  (-2ºF → -4ºF → -6ºF → -8ºF → -10ºF → -12ºF → -14ºF → 8ºF → 6ºF → 4ºF → 2ºF → 0ºF → -2ºF)

When selecting the temperature, the set temperature is displayed initially for 5 seconds, then the actual temperature is displayed.
(There may be slight difference between the set temperature and displayed actual temperature, but it will be corrected to the set temperature automatically.)

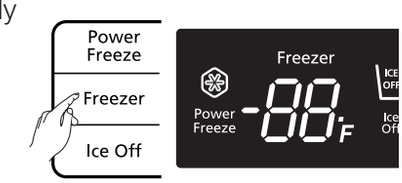

- The Freezer temperature will change depending on the number of door openings, quantity of food, ambient temperature, etc.
- Temperature of each shelve in the freezer may be different.
- The temperature display will blink when freezer temperature increases due to frequent door opening, keeping warm food, etc.

(Blinking will stop when the refrigerator reaches normal temperature. If for some reason it does not stop after a long period of time, contact a Samsung service center.)

Setting the fridge temperature

If you want to control the fridge temperature, follow as below.

Press the **Fridge** Button (Refer the picture)

- The temperature can be set in 2ºF interval between 34ºF and 46ºF.
- Each time the **Fridge** Button is pressed, the temperature setting will change as follows;
  (38ºF → 36ºF → 34ºF → 46ºF → 44ºF → 42ºF → 40ºF → 38ºF)

Operating your SAMSUNG Refrigerator

When selecting the fridge temperature, the set temperature is displayed initially for 5 seconds, then the actual temperature is displayed.
(There may be slight difference between the set temperature and displayed actual temperature, but it will be corrected to the set temperature automatically.)

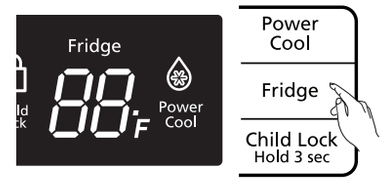

- The Fridge temperature will change depending on the number of door openings, quantity of food, ambient temperature, etc.
- Temperature of each shelve or container in the fridge may be different.
- The temperature display will blink when fridge temperature is increases due to frequent door opening, keeping warm food, etc.

(Blinking will stop when the refrigerator reaches normal temperature. If for some reason it does not stop after a long period of time, contact a Samsung service center.)

If you want to make ice faster (Controlling the Power Freeze)

Press the **Power Freeze** Button. (Refer the picture.)

- The power Freeze light on the display goes on (see the arrow mark) and this function begins to operate regardless of the set freezer temperature.

Press the **Power Freeze** Button again to cancel this function.

- The light goes off and it operates at the set freezer temperature again.

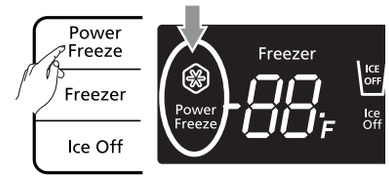

- The Power Freeze function operates for 2 and a half hours regardless of the set temperature.

If you want to speed up the cooling in the Fridge (Power Cool)

Press the **Power Cool** Button. (Refer the picture.)

- The Power cool light on the display goes on (see the arrow mark) and this function begins to operate regardless of the set fridge temperature.

Press the **Power Cool** Button again to cancel this function.

- The light goes off andit operates at the set fridge temperature again.

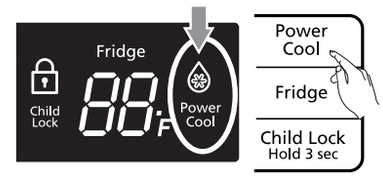

- The Power Cool function operates for 2 and a half hours regardless of the set temperature.

Cooling Off Mode (“OF & OF” code on the display)

This function is for store display refrigerators. It is not for customer use.

CAUTION In Cooling Off Mode, the refrigerator works but doesn’t make cool air. To cancel this mode, press the Power Freeze and Freezer buttons at the same time for 3 seconds until a “Ding-dong” sound is heard and the unit will now cool.



The ice maker will produce 8 cubes per cycle - approximately 100~130 cubes in a 24-hour period, depending on freezer compartment temperature, room temperature, number of door openings and other use conditions.
Throw away the first few batches of ice to allow the water line to clear.
Be sure nothing interferes with the sweep of the feeler arm.
When the bin fills to the level of the feeler arm, the icemaker will stop producing ice.
After the icemaker has been turned on again, there will be a time delay before the icemaker resumes operation.
It is normal for several cubes to be joined together.
If ice is not used frequently, old ice cubes will become cloudy,taste stale and shrink.
So if you don’t want to make ice, press the Ice Off button.

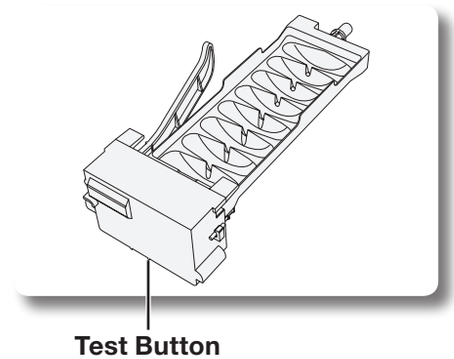

CAUTION **Test button**
If ice doesn’t come out, pull out the ice maker and press the Test Button located on the lower front side of ice maker. (Refer to the picture for the location.)

Operating your SAMSUNG Refrigerator

STORING FOOD IN THE REFRIGERATOR

The Samsung Refrigerator has been designed to provide you with maximum space saving features and functions. Here are some of the customized compartments we have created to keep your food fresher longer. In order to further prevent odor from seeping into the ice compartment, stored food should be wrapped securely and as airtight as possible.

Moving Tray	Can be used to store small dairy items like butter or margarine, yogurt or cream cheese bricks	 **butter/cheese**
Bottle Bin	Designed to handle large, bulky items such as gallons of milk or other large bottles and containers.	
Fridge Shelves	Designed to be crack-resistant, the shelves can be used to store all types of food and drinks. Circular marks on the glass surface are a normal phenomenon and can usually be wiped clean with a damp cloth.	
Vegetable & Fruit Drawers	Used for preserving the freshness of your stored vegetables and fruits. This drawer has been specifically designed to control the level of humidity within the compartment. Keep vegetables and fruits separate when possible.	

Do not place any large articles of food under the lamp in the Refrigerator. An air sensor is located near the lamp and if the sensor is blocked, your Refrigerator may become too cold. Please place Vegetable and Fruits in the Vegetable and Fruits Drawers to avoid freezing them. If the food in your Refrigerator becomes frozen, please set the temperature higher.

STORING FOOD IN THE FREEZER DRAWER

Pull Out Drawer	Best used to store meats or dry foods. Stored food should be placed in a container or wrapped securely using plastic wrap or other suitable wrapping materials.	
Freezer Drawer Bin	Can be used to store meat and dry foods. Stored food should be placed in a container or wrapped securely using plastic wrap or other suitable wrapping materials.	

Bottles should be stored tightly together so that they do not tip and fall out when the Refrigerator door is opened.

If you plan to go away for a long time, empty the Refrigerator and turn it off. Wipe the excess moisture from the inside of the appliance and leave the doors open. This helps keep odor and mold from developing.

REMOVING AND RELOCATING THE FRIDGE ACCESSORIES

1. Door Bins

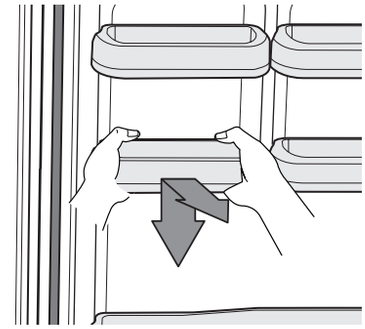

To remove - Simply lift the bin up and pull straight out.

To replace - Slide it in above the desired location and push down until it stops.

CAUTION Injury may occur if the door bins are not firmly inserted. Do not allow children to play with bins. Sharp corners of the bins may cause injury.

Do not adjust a bin full of foods.

Dust removal method -Remove the guard and wash in water.

2. Fridge shelves

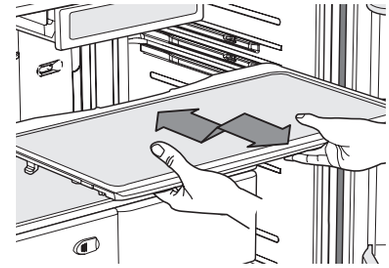

To remove - When pulling out the shelf, if it does not slide out easily, lift it up slightly and pull out again.

To replace - When pushing in the shelf, if it does not slide in easily, lift it up slightly and push in again.

CAUTION The Glass shelves are heavy. Use special care when removing them.

3. Vegetable & Fruit Drawers

To remove - Pull the drawer out to full extension. Tilt up the front of the drawer and pull straight out. (Refer to picture 1~3)

To replace - Insert the drawer into the frame rails and push back into place. (Refer to picture 4)

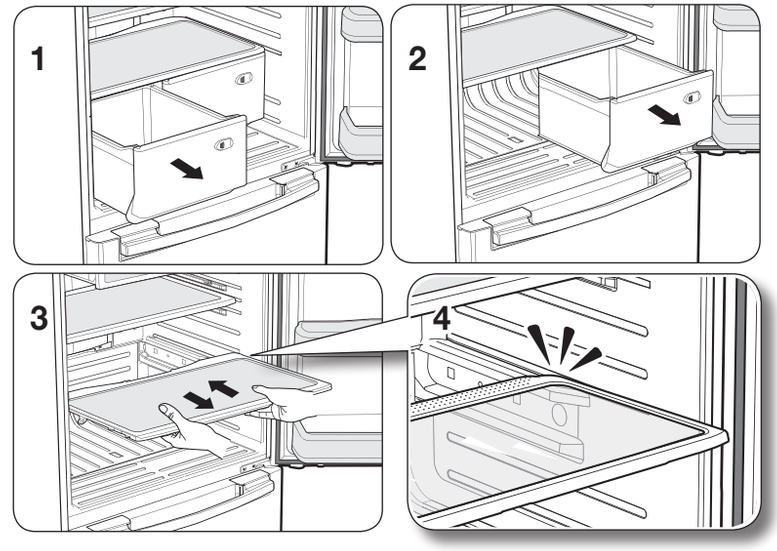

The drawers need to be removed before the glass shelf above them can be lifted out.

REMOVING THE FREEZER ACCESSORIES

1. Pull Out Drawer

To remove - Pull the drawer out to full extension.
Tilt up rear of drawer and lift straight out.
(Refer to picture 1 & 2)

Open the freezer door fully and remove the drawer.

To replace - Place the drawer onto the rails by tilting it up. Lower the drawer into place until it is horizontal and slide the drawer in.
(Refer to picture 3)

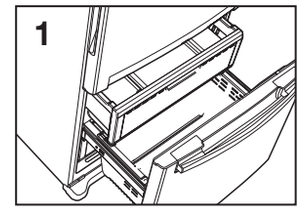

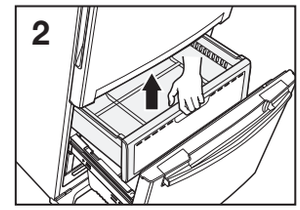

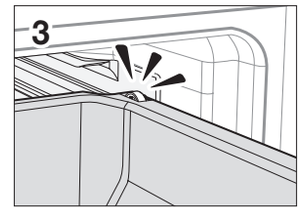

2. Freezer Drawer Bin

To remove - Pull the drawer out fully. Tilt up the rear of the bin and lift it out to remove.

To replace - Place the bin into the rail assembly.

When replacing, place the drawer bin holder into the hole of the rail

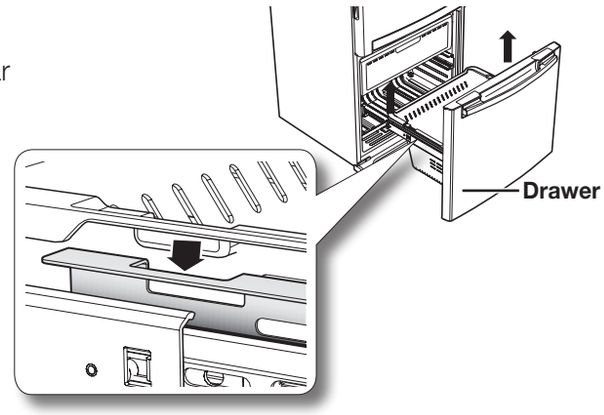

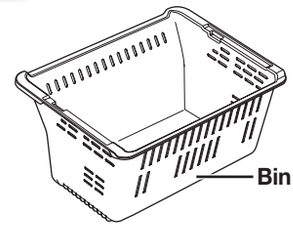

CLEANING THE REFRIGERATOR

Caring for your Samsung Refrigerator prolongs the life of your appliance and helps keep it odor and germ-free.

Cleaning the Interior

Clean the inside walls and accessories with a mild detergent and then wipe dry with a soft cloth. You can remove the drawers and shelves for a more thorough cleaning. Just make sure to dry drawers and shelves before putting them back into place.

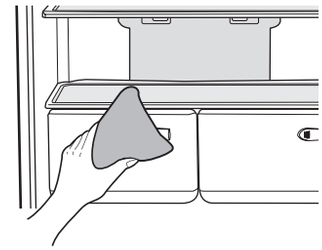

Cleaning the Exterior

Wipe the display panel with damp, clean, soft cloth. Do not spray water directly on the surface of the Refrigerator.

The doors, handles and cabinet surfaces should be cleaned with a mild detergent and then wiped dry with a soft cloth. To keep your appliance looking its best, the exterior should be polished once or twice a year.

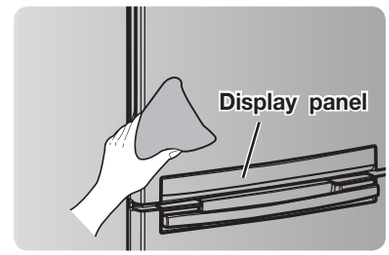



CAUTION Do not use Benzene, Thinner, car detergent, or Clorox for cleaning. They may damage the surface of the appliance and may cause fire.

Cleaning the Rubber door seals

If the rubber door seals are dirty, the doors may not close properly, and the Refrigerator will not operate efficiently. Keep the door seals free of grit or grime by cleaning the doors with a mild detergent and damp cloth. Wipe dry with a clean, soft cloth.

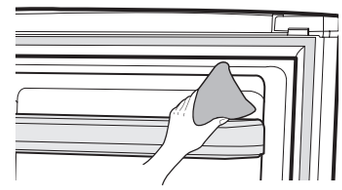

Cleaning behind the Refrigerator

To keep cords and exposed parts free of dust and dirt accumulation, vacuum behind the appliance once or twice a year.

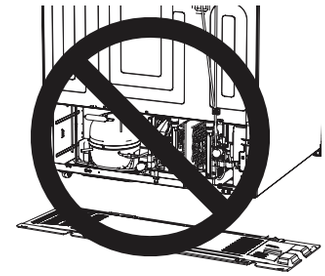

CAUTION Do not remove the back cover. Doing so may cause an electric shock.

CHANGING THE INTERIOR LIGHTS

CAUTION Before changing any of interior lights, unplug the Refrigerator from the power supply. If you are unsure about changing the lights after reading through these directions, contact a Samsung service center for help.

Changing the Interior Light in the Refrigerator

1. Unplug the power cord from the outlet.
2. Pull the shield down while pushing it backwards to remove it.
3. The light bulb may be hot so be careful when touching the bulb.
4. Turn the bulb counterclockwise.
5. Assembly is the reverse order of disassembly.

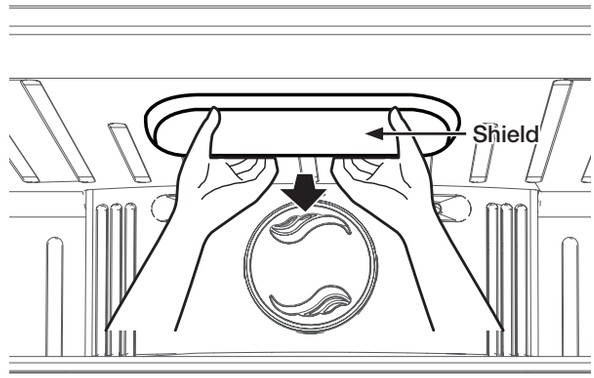

Changing the Interior Light in the Freezer Drawer

1. Unplug the power cord from the outlet.
2. Pull drawer out to full extension.
3. Pull the shield down while pushing it backwards to remove it.
4. The light bulb may be hot.
   Be careful when touching the bulb.
5. Turn the bulb counterclockwise.
6. Assembly is the reverse order of disassembly.

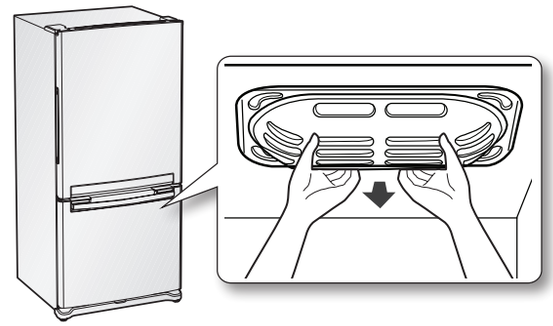

CAUTION Do not place your fingers inside the cover. The light bulb may be hot.

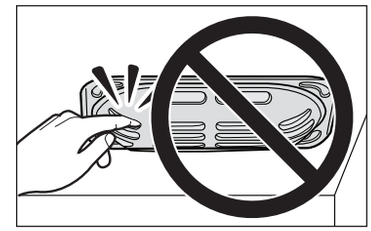

Troubleshooting

PROBLEM	SOLUTION
The Refrigerator does not work at all or it does not chill sufficiently.	• Check that the power plug is properly connected. • Is the temperature control on the display panel set to the correct temperature? Try setting it to a lower temperature. • Is the Refrigerator in direct sunlight or located near a heat source? • Is the back of the Refrigerator so close to the wall that air cannot keep circulating? (Refer to page 10 for the best location.)
The food in the Refrigerator is frozen.	• Is the temperature control on the display set to the correct temperature? Try setting it to a warmer temperature. • Is the temperature in the room too low? • Did you store the food too close to the air vent at the back of the Refrigerator? Move the food away from the air vent.
You hear unusual noise or sounds.	• Check that the Refrigerator is level and stable. • Is the back of the Refrigerator too close to the wall and therefore keeping air from circulating? • Was anything dropped behind or under the Refrigerator? • A “ticking” sound is heard from inside the Refrigerator. It is normal and occurs because various accessories are contracting or expanding according to the temperature of the Refrigerator interior.
The front corners and vertical hinged section of the appliance are hot and condensation is occurring.	• Some heat is normal as anti-condensators are installed in the vertical hinged section of the Refrigerator to prevent condensation. • Is the Refrigerator door ajar? Condensation can occur when you leave the door open for a long time.
Ice Maker is not producing ice.	• Did you wait for 12 hours after installation of the water supply line before making ice? • Is the water line connected and the shut-off valve opened? • Did you manually stop the ice making function? • Is the Freezer temperature too warm? Try setting the Freezer temperature lower.
You hear water bubbling in the Refrigerator.	• This is normal. The bubbling comes from the Refrigerator coolant liquid circulating through the Refrigerator.
There is a bad smell in the Refrigerator.	• Check for spoiled food. • Foods with strong odors(for example, fish) should be tightly covered. • Clean out your Freezer periodically and throw away any spoiled or suspicious food.
Frost forms on the walls of the Freezer.	• Is the air vent blocked? Remove any obstructions so air can circulate freely. • Allow sufficient space between the foods stored for efficient air circulation. • Is the Freezer drawer closed properly?
Water dispenser is not functioning. (Water dispenser models only)	• Is the water line connected and the shut-off valve opened? • Has the water supply line tubing been crushed or kinked? Make sure the tubing is free and clear of any obstruction. • Is the water tank frozen because the Refrigerator temperature is too low? Try selecting a warmer setting on the main display panel.

Warranty

SAMSUNG REFRIGERATOR

LIMITED WARRANTY TO ORIGINAL PURCHASER

This Samsung brand product, as supplied and distributed by Samsung Electronics America, Inc. (Samsung) and delivered new, in the original carton to the original consumer purchaser, is warranted by Samsung against manufacturing defects in materials and workmanship for a limited warranty period of:

One (1) year Parts and Labor on Refrigerator
Five (5) years Parts and Labor on sealed Refrigeration system only*
(*Compressor, evaporator, condenser, drier, connecting tubing)

This limited warranty begins on the original date of purchase, and is valid only on products purchased and used in the United States. To receive warranty service, the purchaser must contact Samsung for problem determination and service procedures. Warranty service can only be performed by a Samsung authorized service center. The original dated bill of sale must be presented upon request as proof of purchase to Samsung or Samsung authorized service center.

Samsung will repair or replace any part found to be defective, at our option and at no charge as stipulated herein, with new or reconditioned parts during the limited warranty period specified above. All replaced parts and products become the property of Samsung and must be returned to Samsung. Replacement parts and products assume the remaining original warranty, or ninety (90) days, whichever is longer.

In-home service will be provided during the warranty labor period subject to availability within the contiguous United States. In-home service is not available in all areas. To receive in-home service, the product must be unobstructed and accessible from floor level to service personnel. If during in-home service repair cannot be completed, it may be necessary to remove, repair and return the product. If in-home service is unavailable, Samsung may elect, at our option, to provide for transportation of our choice to and from a Samsung authorized service center. Otherwise, transportation to and from the Samsung authorized service center is the responsibility of the purchaser.

This limited warranty covers manufacturing defects in materials and workmanship encountered in normal, noncommercial use of this product, and shall not apply to the following, including, but not limited to: damage which occurs in shipment; delivery and installation; applications and uses for which this product was not intended; altered product or serial numbers; cosmetic damage or exterior finish; accidents, abuse, neglect, fire, water, lightning or other acts of nature; use of products, equipment, systems, utilities, services, parts, supplies, accessories, applications, installations, repairs, external plumbing and leaks, external wiring, circuit breakers, fuses or connectors not supplied and authorized by Samsung, or which damage this product or result in service problems; incorrect electrical line voltage, fluctuations and surges; customer adjustments and failure to follow operating instructions, cleaning, maintenance and environmental instructions that are covered and prescribed in the instruction book; loss of food due to spoilage; consumable items including filters and light bulbs.

THERE ARE NO EXPRESS WARRANTIES OTHER THAN THOSE LISTED AND DESCRIBED ABOVE, AND NO WARRANTIES WHETHER EXPRESS OR IMPLIED, INCLUDING, BUT NOT LIMITED TO, ANY IMPLIED WARRANTIES OF MERCHANTABILITY OR FITNESS FOR A PARTICULAR PURPOSE, SHALL APPLY AFTER THE EXPRESS WARRANTY PERIODS STATED ABOVE, AND NO OTHER EXPRESS WARRANTY OR GUARANTY GIVEN BY ANY PERSON, FIRM OR CORPORATION WITH RESPECT TO THIS PRODUCT SHALL BE BINDING ON SAMSUNG. SAMSUNG SHALL NOT BE LIABLE FOR LOSS OF REVENUE OR PROFITS, FAILURE TO REALIZE SAVINGS OR OTHER BENEFITS, OR ANY OTHER SPECIAL, INCIDENTAL OR CONSEQUENTIAL DAMAGES CAUSED BY THE USE, MISUSE OR INABILITY TO USE THIS PRODUCT, REGARDLESS OF THE LEGAL THEORY ON WHICH THE CLAIM IS BASED, AND EVEN IF SAMSUNG HAS BEEN ADVISED OF THE POSSIBILITY OF SUCH DAMAGES. NOR SHALL RECOVERY OF ANY KIND AGAINST SAMSUNG BE GREATER IN AMOUNT THAN THE PURCHASE PRICE OF THE PRODUCT SOLD BY SAMSUNG AND CAUSING THE ALLEGED DAMAGE. WITHOUT LIMITING THE FOREGOING, PURCHASER ASSUMES ALL RISK AND LIABILITY FOR LOSS, DAMAGE OR INJURY TO PURCHASER AND PURCHASER'S PROPERTY AND TO OTHERS AND THEIR PROPERTY ARISING OUT OF THE USE, MISUSE OR INABILITY TO USE THIS PRODUCT SOLD BY SAMSUNG NOT CAUSED DIRECTLY BY THE NEGLIGENCE OF SAMSUNG. THIS LIMITED WARRANTY SHALL NOT EXTEND TO ANYONE OTHER THAN THE ORIGINAL PURCHASER OF THIS PRODUCT, IS NONTRANSFERABLE AND STATES YOUR EXCLUSIVE REMEDY.

Some states do not allow limitations on how long an implied warranty lasts, or the exclusion or limitation of incidental or consequential damages, so the above limitations or exclusions may not apply to you. This warranty gives you specific legal rights, and you may also have other rights, which vary from state to state.
To obtain warranty service, please contact Samsung at:

SAMSUNG CUSTOMER CARE CENTER
Samsung Electronics America, Inc. 400 Valley Road Suite 201 Mt. Arlington, NJ 07956
1-800-SAMSUNG (1-800-726-7864) and www.samsung.com

MEMO

MEMO



QUESTIONS OR COMMENTS?

COUNTRY	CALL	OR VISIT US ONLINE AT	WRITE
U.S	800-SAMSUNG (800-726-7864)	www.samsung.com	Samsung Electronics America, Inc. 400 Valley Road Suite 201 Mt. Arlington, NJ 07956
CANADA	800-SAMSUNG (800-726-7864)	www.samsung.com/ca	Samsung Electronics Canada Inc. Customer Service, 55 Standish Court Mississauga, Ontario L5R 4B2 Canada

Code No. DA68-01778B REV(0.0)