List Of Contents

Para		Page
	Absorption Cooling Unit Diagram	2
1	The Absorption Type Cooling Unit	3
2	The Domestic Refrigerator	4
3	Three Points To Remember	5
4	System Operation	7
5	Installation Instructions For LP Gas Refrigerator	8
6	Installation Of Refrigerator In Trailers	9
7	Gas Line	13
8	Gas Burner	13
9	Burner Orifice & Mixture Tube	14
10	Burner Orifice Clogged	15
11	Check Of The Ignition Plug & Thermocouple	16
12	Flue System	17
13	Pressure Measuring Devices	18
14	Power, Current, Resistance Chart	20
15	Heating Elements For Different Refrigerators	21
16	Leveling	21
17	Temperature Control	21
18	Thermal Sensor	22
19	Storing Food In The Refrigerator	22
20	Cleaning	22
21	Ice Cubes	22
22	Travel Lock	22
23	To Shut Off The Cabinet	23
24	Door Seal	23
25	Flue Obstructions	23
26	Odors Inside The Refrigerator	23
27	Odors From Fumes	24
28	Operation Analysis For Cooling Unit	24
29	Unit Filling Valve	25
30	Things To Do Before Sending Back Defective Units To Distributor	25
31	Packing Of Defective Units	25
32	Wiring Diagram	26
33	Trouble Shooting	28
34	Changing Printed Wiring Board Ass'y (Switch) And Buzzer	34
35	Changing Printed Wiring Board Ass'y (Main)	35
36	Changing Fuse	35
37	Changing Printed Wiring Board Ass'y (Thermocouple)	36
38	Changing Transformer	36
39	Changing Relay (Only For SRAE 0732, 1232)	36
40	Changing Ignition Plug	36
41	Changing Thermocouple	37
42	Changing Thermal Sensor	37
43	Changing Heater	38
44	Changing Solenoid Valve	38
45	Changing Gas Filter	38
46	Changing Manual Valve	39
47	Changing Cooling Unit (SRAE 1222, 1232)	39
48	Changing Cooling Unit (SRAE 0722, 0732)	40
49	Changing Door Gasket	41
50	Changing Door Liner	41
51	Instruction For Mounting The Door Panel	42
52	Interchanging Of Door Opening	43
53	Changing Cabinet Frame Ass'y	44
54	Parts List	46

Absorption Cooling Unit Diagram

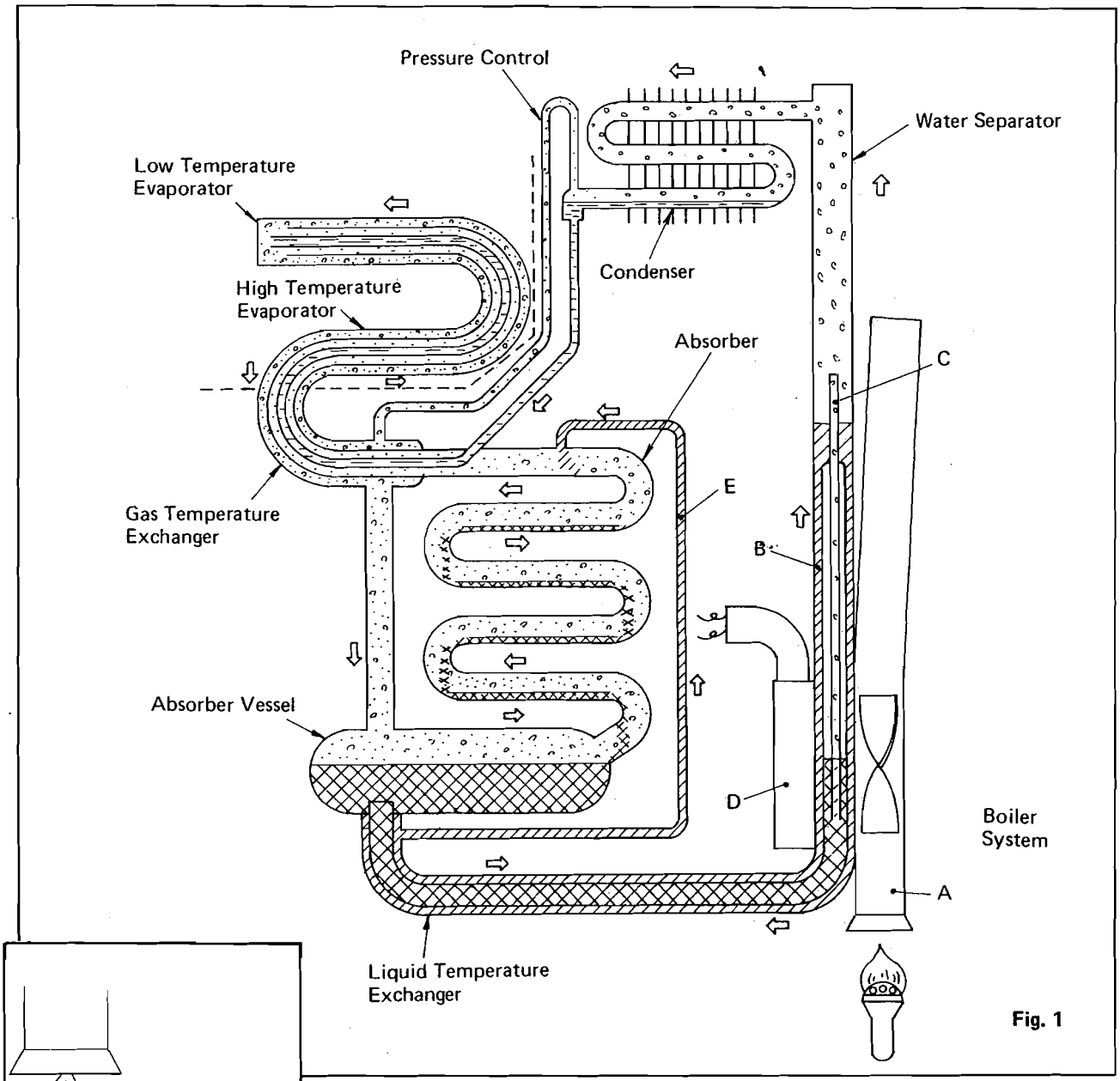

Fig. 1

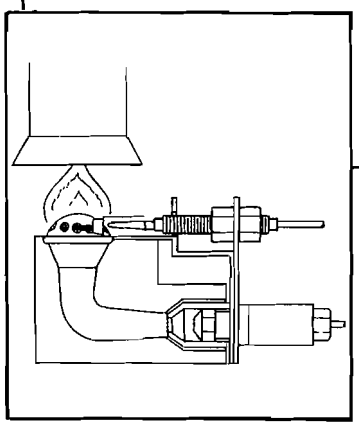

The correct flame, at "COLDEST" setting, should have a bright blue crown at the base of the flame and a slight buzzing noise.

Liquid Heat Exchanger

- Ammonia Vapor
- Hydrogen Gas
- Ammonia Hydrogen Mixed Vapor
- Strong Ammonia Solution
- Weak Ammonia Solution
- Liquid Ammonia

1. The Absorption Type Cooling Unit

The continuous absorption type of cooling unit is operated by the application of a limited amount of heat, gas, electricity or kerosene. No moving parts are employed.

The unit, (see Fig. 1), consists of four main parts - the boiler system, condenser, evaporator and absorber. All the parts are connected by tubes, the whole construction being of steel welded together.

The unit (in Fig. 1) can either be run on electricity or gas. On the picture the unit operates on LP gas.

The unit charge consists of a quantity of ammonia, water and hydrogen under pressure sufficient to condense ammonia at ordinary room temperature. The unit is then sealed off.

Some of the ammonia, in a relatively strong solution in water, is in the boiler system. When heat is supplied at point A on the picture (LP gas), bubbles of ammonia gas are produced which rise and carry with them quantities of weak ammonia solution. This weak solution passes into the tube (B) and ammonia vapor rises into the water separator. Here any water vapor is condensed and runs back into the boiler system leaving the dry ammonia vapor to pass to the condenser.

Air circulating over the fins of the condenser takes up sufficient heat from the ammonia vapor to cause it to condense to liquid ammonia in which state it flows into the low temperature evaporator, situated at the base of the frozen storage compartment. The ammonia passes from the low temperature evaporator into the high temperature evaporator, situated at the rear inside the cabinet.

The low temperature evaporator and the high temperature evaporator are also supplied with hydrogen. The hydrogen passes across the surface of the ammonia and lowers the ammonia vapor pressure sufficiently to allow the liquid ammonia to evaporate. The evaporation of the ammonia extracts heat from the evaporator and from the food storage space, thereby lowering the temperature inside the refrigerator.

The mixture of ammonia and hydrogen vapor passes from the evaporator to the absorber vessel.

Entering the upper portion of the absorber is a continuous trickle of weak ammonia solution fed by gravity from the tube (E). This weak solution, flowing down through the absorber, comes into contact with the mixed ammonia and hydrogen gases and readily absorbs the ammonia from the mixture, leaving the hydrogen free to rise through the absorber coil and to return to the evaporator. The hydrogen thus circulates continuously between the absorber and the evaporator.

The strong ammonia solution produced in the absorber flows down to the absorber vessel and thence to the boiler system, thus completing the full cycle of operation.

The liquid circulation of the unit is purely gravitational. It is therefore essential that the unit stands upright.

Heat is generated in the absorber by the process of absorption. This heat must be dissipated into the surrounding air. Heat must also be dissipated from the condenser in order to cool the ammonia vapor sufficiently for it to liquefy. Free air circulation is therefore necessary over the absorber and condenser.

The whole unit operates by the heat applied to the boiler system and it is of paramount importance that this heat is kept within the necessary limits and is properly applied.

When the unit operates on electricity a heating element is fitted in the pocket (D) and the pump tube (C) will start to operate.

2. The Domestic Refrigerator

The domestic refrigerator is a cabinet designed to keep perishable foodstuffs in a wholesome condition for a sufficiently long period to meet household requirements. To do this, a temperature of between 35° F (2° C) and 50° F (10° C) has been found most suitable, and the refrigerator must be capable of maintaining this temperature under the most severe conditions likely to be met.

The cabinet is an insulated container, fitted with shelves, and provision made for the storage of frozen foods and the freezing of water into icecubes of convenient size for household use.

In order to maintain the cabinet at the relatively low temperatures necessary for the storage of food and the making of ice, heat has to be extracted from the foodstuffs, the air admitted to the cabinet every time the door of the refrigerator is opened, the small amount of heat that enters through the insulated walls of the cabinet and from the water in the ice trays. The sum of these items constitutes the load on the cooling unit.

The Frozen Storage Compartment is inside the cabinet and attached to the Evaporator (that portion of the unit where the cooling effect is produced), consequently it is maintained at a low temperature.

The evaporator temperature is normally some 5° F (-15° C) below the average cabinet temperature when the refrigerator is working in room temperatures of approximately 77° F (25° C), and this temperature difference will be increased or decreased by a rise or fall in the room temperature.

Inside the cabinet the air around the evaporator is cooled, becomes heavier and moves downwards. As it passes over the foodstuffs it extracts heat, becomes lighter and rises, thus creating an air circulation within the cabinet. (See Fig. 2.) The coldest position in the cabinet is immediately below the evaporator.

A Temp. Control which automatically controls the cabinet temperatures, is fitted to all models.

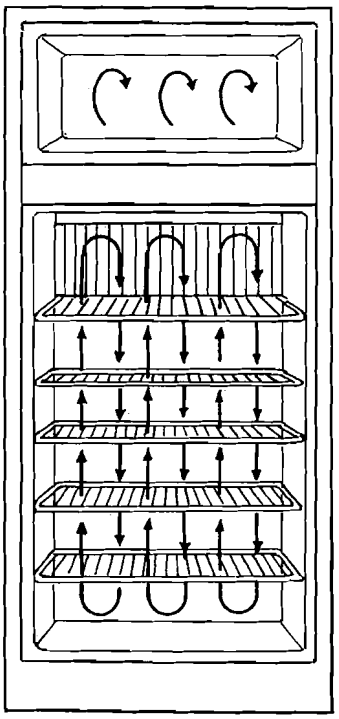

Fig. 2 Air Circulation

3. Three Points To Remember

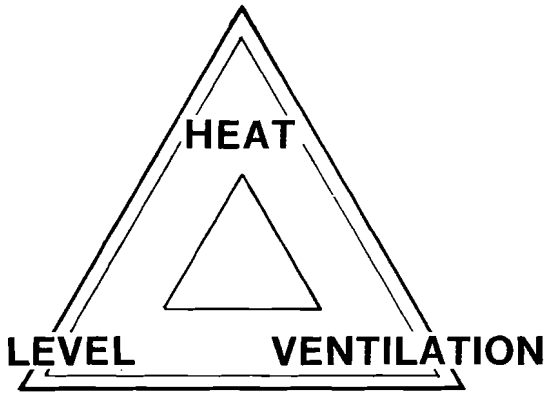

Heat Input

1. Will refrigerator work on electricity but not on gas? If so, first check line pressure at range. It should read 11" water column with two (2) range burners on.

2. Adjust tank regulator if necessary.

3. Check for obstruction in gas line.

4. Maximum pressure should be 10.5" to 11.5" water column to prevent hot air from accumulating on top of the refrigerator.

5. Determine if burner orifice is proper size and clean. As orifices are precisely drilled and extremely small it is difficult to detect any obstruction visually. If any doubt, replace with new orifice or clean the orifice by rinsing in alcohol or M.E.K and blowing out with air. **NEVER REAM OUT.**

6. If burner will not stay lit, check thermocouple for proper location.

7. Check flue baffle.

8. Is burner located properly in relation to the generator?

9. Will refrigerator work on gas but not on electricity?

10. Is power cord plugged in? With Volt/Watt meter check for proper wattage draw. (Heaters are designed to draw rated wattage if supply of current is between 115 and 120 volts. If voltage is otherwise then watt reading will be different.

    Example: If voltage is 10% lower than rated, then watt meter reading will be approximately 20% lower.

11. If volt reading is 115 to 120 volts, but watt reading is low then check for loose connections or defective heater.

12. If watt reading is zero, check continuity of circuit through.

    a. Power plug & cord.
    b. Heater element.

Ventilation

1. Is installation made according to specifications? (page No. 8).

2. Must have louvered service door at lower rear of air inlet through floor at rear of refrigerator, either of which must have minimum free air opening of 50 square inches.

3. Must have roof vent directly over condenser with free air opening of 92 square inches.

4. Any dead air space above refrigerator must be blocked off to prevent hot air from accumulating on top of the refrigerator.

5. Any deviation from these specifications which reduces the flow of air over the condenser, will seriously affect the performance of the refrigerator.

6. In border line cases of restricted air flow, a small fan can be utilized when ambient temperatures are above normal.

7. Has any obstruction developed which would reduce air flow such as:

   a. Insulating material, bird nests or other objects which may have fallen onto the condenser or plugged the roof vent.

   b. Has customer failed to remove filter or baffle from the service door.

Level

1. Make sure customer understands the importance of leveling on the freezer plate.

2. Explain the circulation of the refrigerant gases and that the unit is designed in such a manner that if the freezing plate is level, then the complete unit will have the proper gravity return.

LEVELING AND WHY

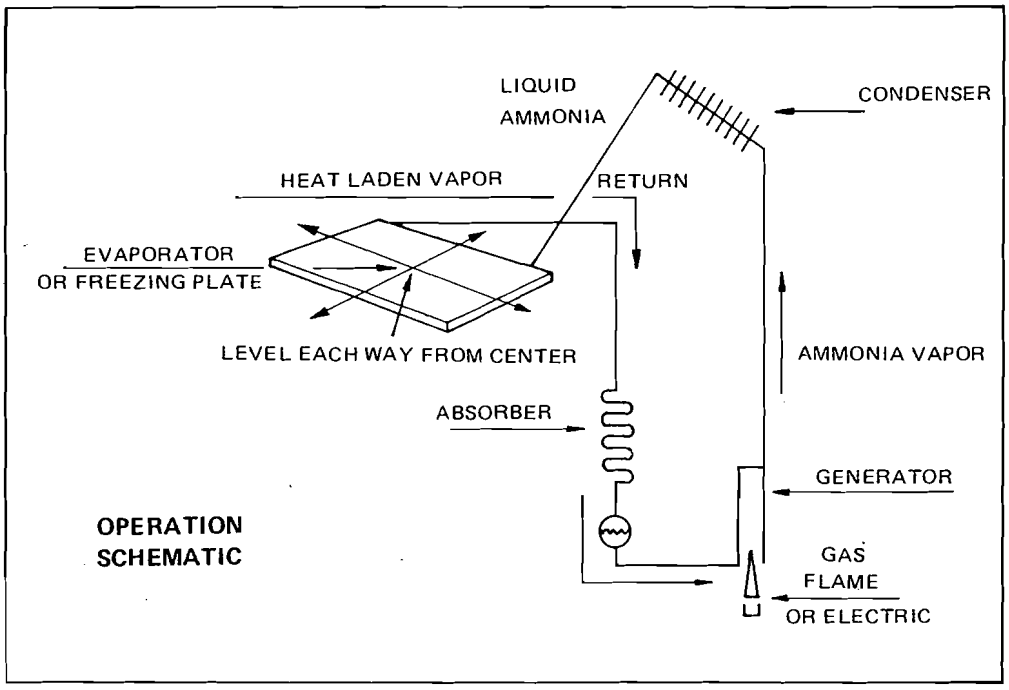

Fig. 3

Your gas absorption refrigerator is powered by an L.P. gas flame permitting you to have silent refrigeration wherever you go, and in order for this to be possible and practical, certain conditions must be met.

First of all the freezing unit is one that uses heat as a source of power. The heat generated either by gas flame or electricity circulates the refrigerant in the form of a vapor up through the condenser where it is changed to a liquid.
From this point it flows down through the freezing zone (or freezing plate) on its way back to the generator, completing the cycle.

When the liquid ammonia passes through the freezing plate it is again changed into a vapor by heat absorbed from the food and cabinet area.
If this heat laden vapor is trapped or partially trapped by liquid ammonia preventing it from passing out of the evaporator (or freezing plate) due to an unlevel condition, the results will be a total or partial loss of refrigeration. For this reason take a little time to level the freezing plate using a small pocket level (see schematic) and adjust the trailer so that this point (center of freezer plate) is level in each direction. (see Fig. 3)

The refrigerator is normally installed with the freezing plate level in relation to the floor (center) of trailer, if you find this true, then level the trailer floor; if not level from the plate.

Operation In Transit:

While the refrigerator must be level when the trailer is stopped, the refrigerator has been so designed that it will perform during transit.

When your trailer or camper is moving a washing action caused by the motion will prevent any liquid from trapping this vapor on its way back to the generator for recirculation, in addition traveling creates more air circulation for the air cooled unit, resulting in improved performance.

4. System Operation

Gas Mode

When GAS SWITCH is pressed, "GAS" INDICATOR LAMP lights up in green and IGNITION SYSTEM begins to work – giving off continuous sparks between IGNITION PLUG and BURNER.

About 10 seconds after GAS SWITCH ON, SOLENOID VALVE will open up and BURNER will let the gas begin flowing. Sparking will stop as soon as the burner is lit. If the flame goes out for some reason such as being blown out, sparking will begin until the burner is relit.
If the burner does not light within 90 seconds after SPARK ON, VALVE is shut off, BUZZER begins ringing and "GAS" INDICATOR LAMP blinks in red. This condition is called "Lock Out".
To release LOCK OUT condition, press OFF SWITCH and then press GAS SWITCH, the series of action (described above) starts again. If the LOCK OUT condition cannot be released by pressing GAS SWITCH repeatedly, refer to TROUBLE SHOOTING HINTS. (Nuisance Lockouts)
In regular operation, SOLENOID VALVE and IGNITION SYSTEM are controlled (ON/OFF) by thermocircuit.
That is, when thermocircuit is off, burner is also off. So this type of unit does not require continuous lighting like usual units. (Usual units set the temperature in the box according to the strength of flames.)
"GAS" indicator lamp indicates only that the refrigerator is in "GAS" mode. Regarding "GAS" mode, "GAS" indicator lamp keeps on lighting up whether thermocircuit is on or off.

AC Mode

When connecting AC POWER SUPPLY and DC POWER SUPPLY at the same time, AC is connected prior to DC. When ELEC. SWITCH is pressed, "AC" INDICATOR LAMP lights up in green.

In this condition, if thermocircuit is on, AC HEATER comes on. The "AC" INDICATOR LAMP indicates only that it is in "AC" mode.

DC Mode (SRAE 0732, 1232 only)

When CAR IGNITION LOCK SWITCH is on and is connected only with DC POWER SUPPLY (without being connected with AC POWER SUPPLY), if the ELEC. SWITCH is pressed, "DC" INDICATOR LAMP will light up in green. In this condition, if thermocircuit is on, DC HEATER comes on. The "DC" INDICATOR LAMP indicates only that it is in "DC" mode.

Voltage Check Function

When the voltage of POWER SUPPLY declines (under AC 80V, DC 10.2V) on "GAS" mode, LOCKOUT condition begins. In this case, LOCKOUT will be released without touching the switch when the voltage returns to within the limits of regular functioning (AC 80V –135V, DC 10.2V – 16V).
When the voltage goes down (under AC 80V, DC 10.2V) in either "AC" or "DC" mode, both "AC" and "DC" INDICATOR LAMP begin blinking at the same time, BUZZER begins ringing and AC DC HEATER goes off.
In this case, regular functioning will resume without touching the switch when the voltage returns to within the limits of regular functioning (AC 80V – 135V, DC10.2V – 16V).

5. Installation Instructions For LP Gas Refrigerators

General

Special care is necessary with the installation of LP gas refrigerators in trailers to ensure, firstly safety in operation, and secondly satisfactory operation under conditions that are usually much more difficult than those cases with the normal home installation.

The refrigerator must be installed on a firm floor and must be level. The latter point should be checked by using a spirit level and level both ways in the freezer compartment.
A continuous movement, as in the trailers on tow, will not affect the operation if the rolling or pitching passes either side of level.

The operation will be least affected if the refrigerator is installed with the door parallel to the side wall of the trailer.

Whenever the trailer is parked, care should be taken that it is accurately leveled. When parking try to avoid having the wind blowing directly against the wall where the vent outlets are located.

The refrigerator must be securely fixed so that it will not move when the trailer is in motion, but there should be means of relocating for easy service access.

Screw holes for securing the cabinet to the recess floor are provided in the cabinet support rails.

An access door on the outside wall at the back of the refrigerator must be installed for easy servicing.

The LP gas refrigerators are of air-cooled type.
Therefore it is of utmost importance that the air circulation round the unit parts behind the cabinet is unrestricted. Good refrigeration performance is dependent upon adequate ventilation of the refrigerator enclosure.
This will be achieved by following instructions as shown in Figs. 4 to 7.

Some methods of installation are shown in Figs. 4 – 7.
Each method has the inlet vent located on the side of the trailer or mobile home.

Important

The refrigerator must be completely enclosed at the top, bottom and sides. All joints in the enclosure must be tight to assure that no combustion products enter into the living area.

Make sure that no part of the vent chimney walls cover the cooling unit and that the louvers in the sidewall vents are obstructed.

Any dead space above the refrigerator should be sealed off at the rear top corner of the refrigerator cabinet.

All surfaces in the ventilation channel must be protected with a fire resistant material.

6. Installation Of Refrigerators In Trailers

The following figures show suggested ways of installations.

RECOMMENDED INSTALLATION
VENT KIT NO. 846H-2A

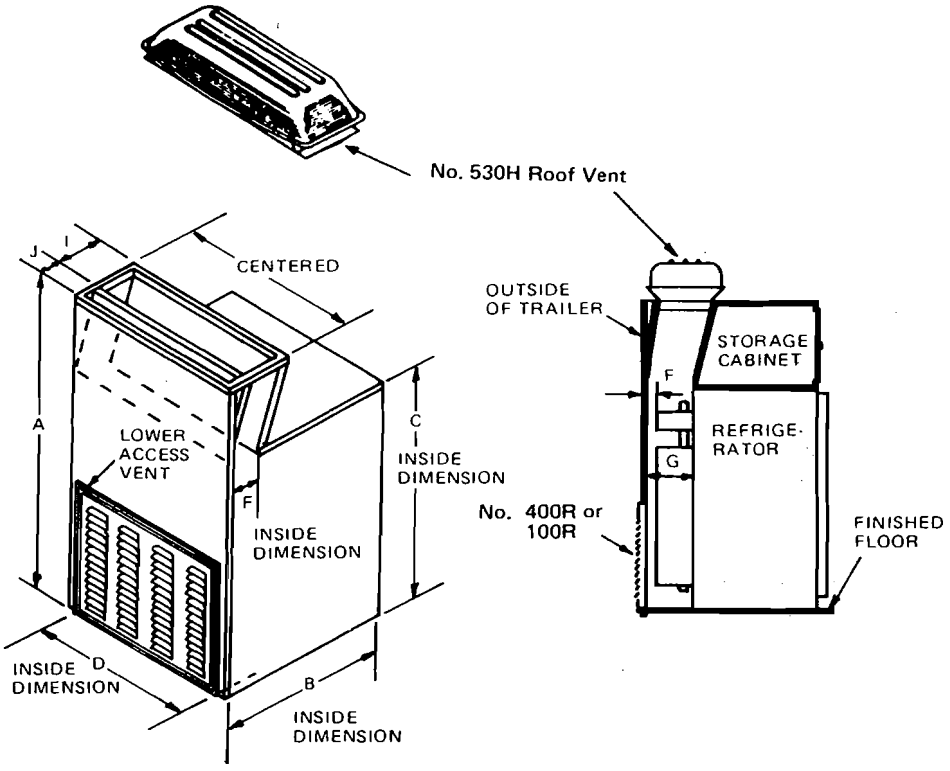

Fig. 4

Model No.	A		C	D	I	J	Recommended				Minimum			
	Min.	Max.					B	E	F	G	B	E	F	G
SRAE0722 SRAE0732	56-3/4	83-7/8	54-1/8	24-1/8	5-1/8	4-1/4	24-3/4	5	1	5	23-3/4	4	0	4
SRAE1222 SRAE1232	60-5/16	83-7/8	57-5/8	24-1/8	5-1/8	4-1/4	24-3/4	5	1	5	23-3/4	4	0	4

ALTERNATE INSTALLATION
VENT KIT NO. 746H-5

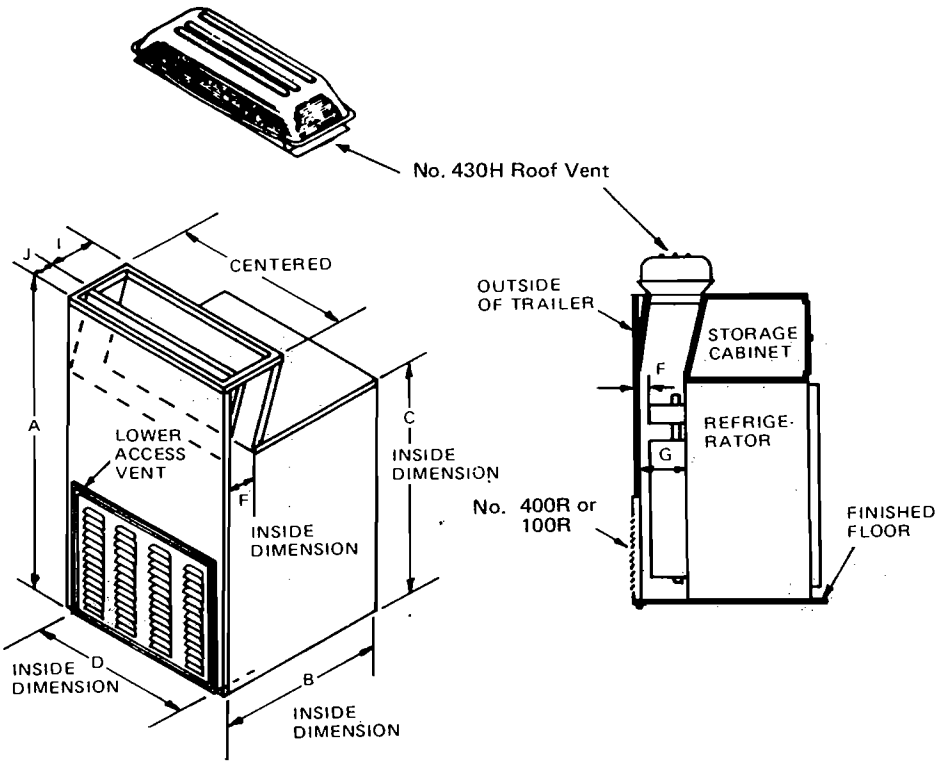

Fig. 5

Model No.	A		C	D	I	J	Recommended				Minimum			
	Min.	Max.					B	E	F	G	B	E	F	G
SRAE0722 SRAE0732	56-3/4	83-7/8	54-1/8	24-1/8	5-1/8	4-1/4	24-3/4	5	1	5	23-3/4	4	0	4

ALTERNATE INSTALLATION
VENT KIT NO. 946H-5

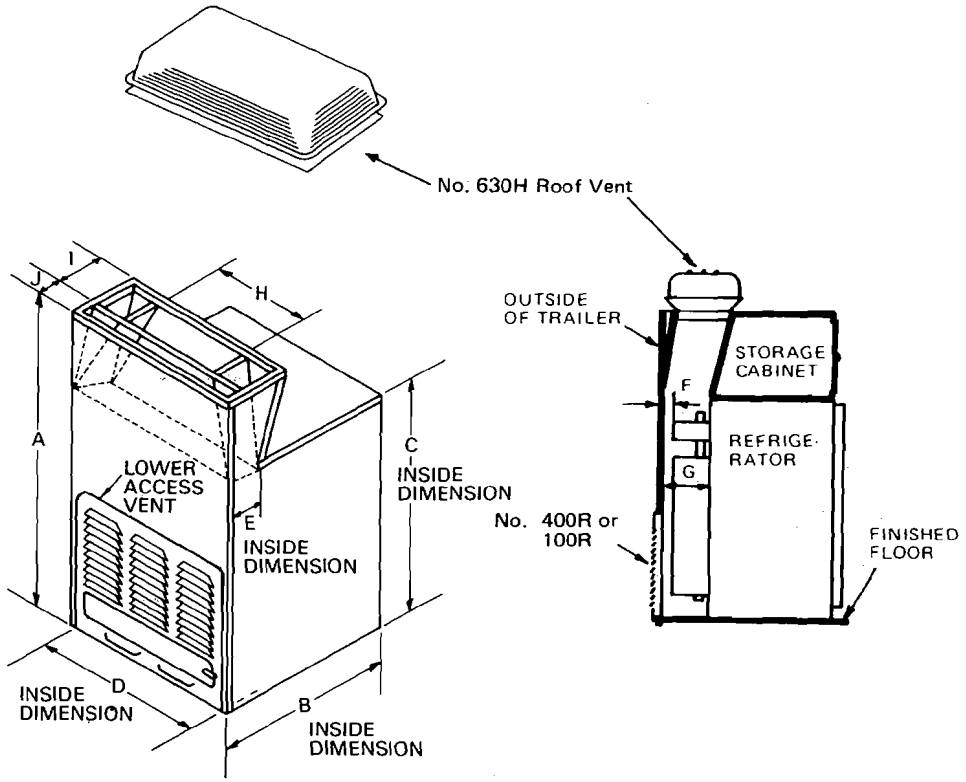

Fig. 6

Model No.	A		C	D	I	J	H	Recommended				Minimum			
	Min.	Max.						B	E	F	G	B	E	F	G
SRAE0722 SRAE0732	56-3/4	83-7/8	54-1/8	24-1/8	7-1/8	4-1/4	17	24-3/4	5	1	5	23-3/4	4	0	4
SRAE1222 SRAE1232	60-5/16	83-7/8	57-5/8	24-1/8	7-1/8	4-1/4	17	24-3/4	5	1	5	23-3/4	4	0	4

APPROVED VENTING COMPONENTS

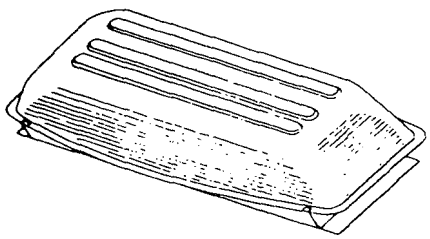

No. 430H ROOF
VENT
Cutout Requirements
4-1/2 x 20-1/2
Unit has sheet metal
base and ABS plastic top.

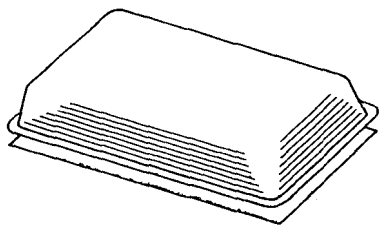

No. 530H ROOF
VENT
Cutout Requirements
5-1/8 x 23-3/4
Unit has sheet metal
base and ABS plastic top.

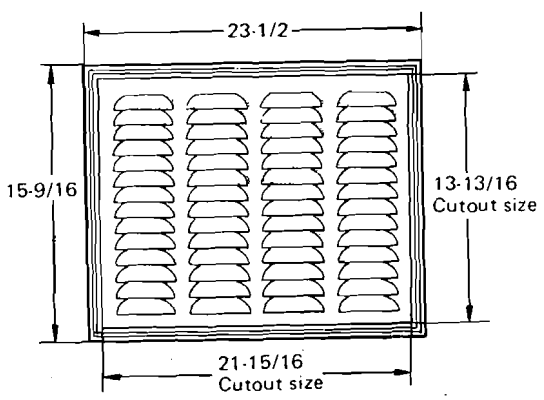

No. 630H ROOF
VENT
Cutout Requirements
7-1/8 x 17
Unit has sheet metal
base and ABS plastic top.

No. 400R or 100R
LOWER ACCESS VENT

Fig. 7

7. Gas Line

LP gas is highly inflammable and it is of extreme importance to ensure not only that all joints in piping carrying the gas from the storage bottle to the appliances burning are – and will remain – absolutely gas tight, but that any non-metallic packings used in such joints are made from materials that will not deteriorate from contact with LP gas.

The gas line should be free of kinks and sharp bends.
After installation, the gas should be turned on, and all joints in the gas line must be checked for leaks up to the burner by use of soap and water solution. This check should be exercised periodically.

Do not fit any extension to the top of the flue.
This is not only unnecessary, but can create draught conditions which can adversely affect correct combustion at the burner and consequently, the functioning of the cooling unit.

The refrigerator should be operated at an inlet gas pressure of 11" W.C. (2.75 kPa). Refer to Para. 13.

Incoming gas pressure is controlled by the pressure regulator on the propane/butane bottle.

8. Gas Burner

The gas burner consists of the following parts:

1. Mixture tube
2. Burner Holder
3. Burner Orifice
4. Burner filter
5. Burner Joint

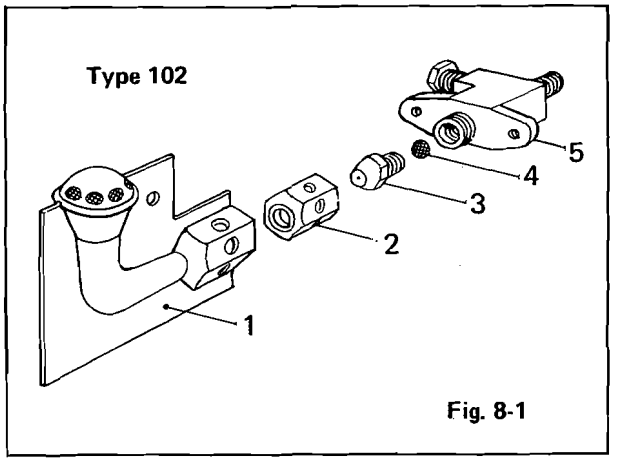

Fig. 8-1

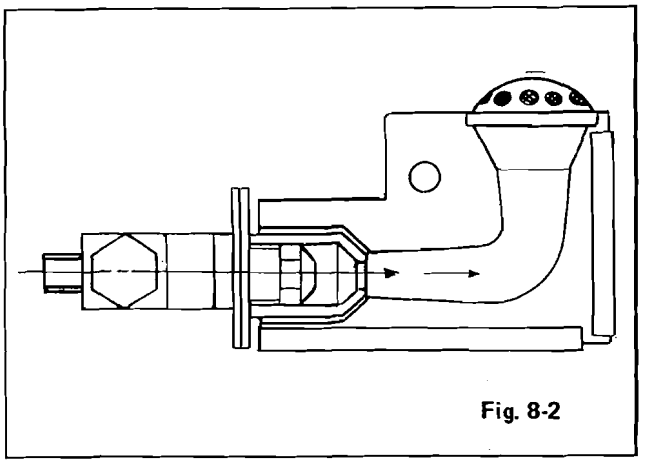
Fig. 8-2

It is most important to ensure the following conditions when setting up the burner.

1. The mixture tube is inserted into the burner holder, and fixed with the bracket and the burner joint.
2. When the burner orifice is screwed to the burner joint, be sure that it is clean.
3. Position the mixture tube in such a way that its center line should be aligned center-to-center with the flue tube axis.
4. Look for spiders in burners.

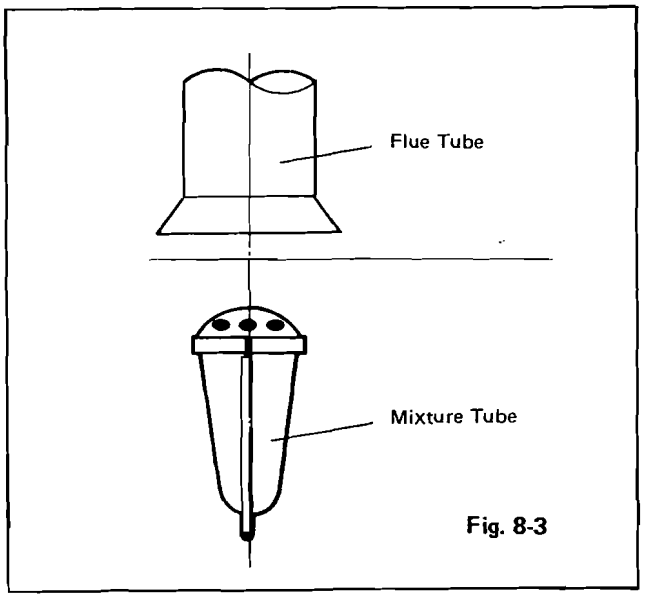

Fig. 8-3

9. Burner Orifice & Mixture Tube

Burner Orifice

The burner orifice size is indicated by a number stamped on the side of the hexagonal head with color identification.

Be sure to clean the orifice by rinsing in alcohol or M.E.K and blowing out with air. Don't use a pin or the like in cleaning the orifice so as to avoid enlargement of the orifice diameter and damage.

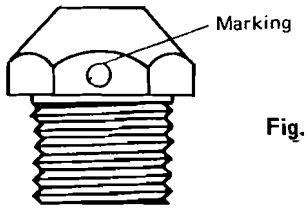

Fig. 9

* Orifice Marking (Refer to Table 1.)

Cooling Unit, Orifice, and Mixture Tube for Different Refrigerators Table 1

Model	Cooling Unit	Orifice Parts No.	Orifice Marking	Orifice Color	**Mixture Tube Marking	Input Rate (Btu/hr)
SRAE0722 SRAE0732	833-0-0003-184-00 833-0-0003-198-00	833-2-9260-003-00	39	Green	M102M	1600
SRAE1222 SRAE1232	833-0-0003-185-00 833-0-0003-199-00	833-2-9260-003-00	39	Green	M102M	1600

Refer to cooling Unit section of each model's Spare Parts Lists.

Mixture tube

When changing MIXTURE TUBE, make sure of THE TYPE IDENTIFICATION MARK.

** Mixture Tube Marking (Refer to Table 1.)

Fig. 10

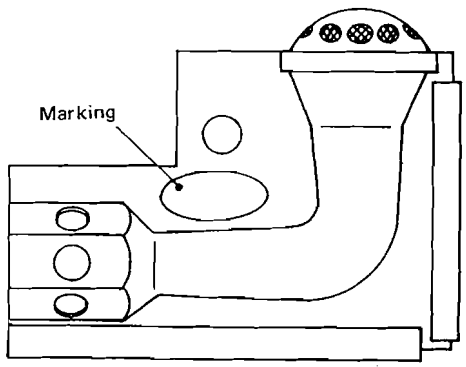

10. Burner Orifice Clogged

When the burner orifice is clogged, the flame will become too small which may affect the burner heating output and result in decrease of cooling efficiency. For taking out the clog or replacing the burner orifice, refer to Figs. 11-1 through 11-4.

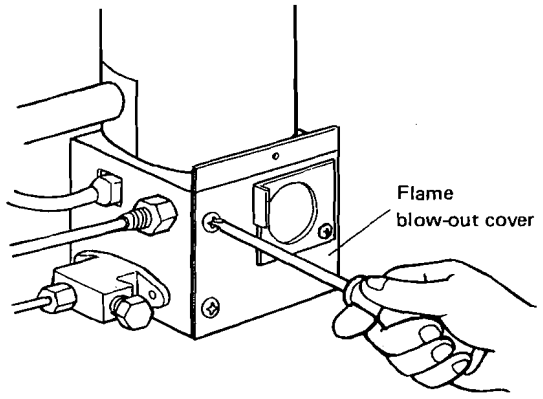

Fig. 11-1 Remove the flame blow-out cover from the refrigerator by unscrewing 2 screws.

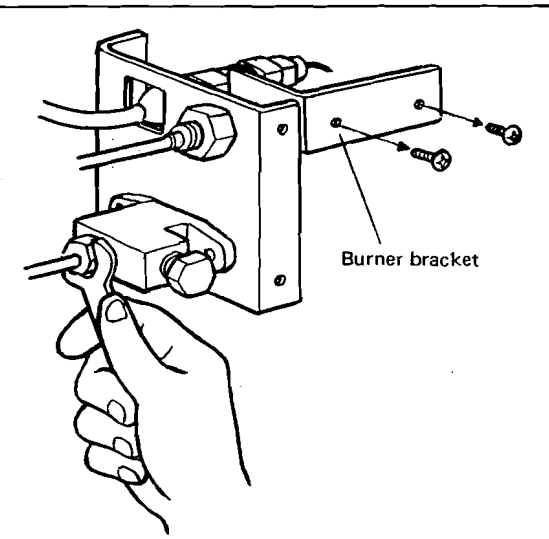

Fig. 11-2 Remove the box nut of the gas pipe from the burner joint. (Turn the nut counterclockwise.)

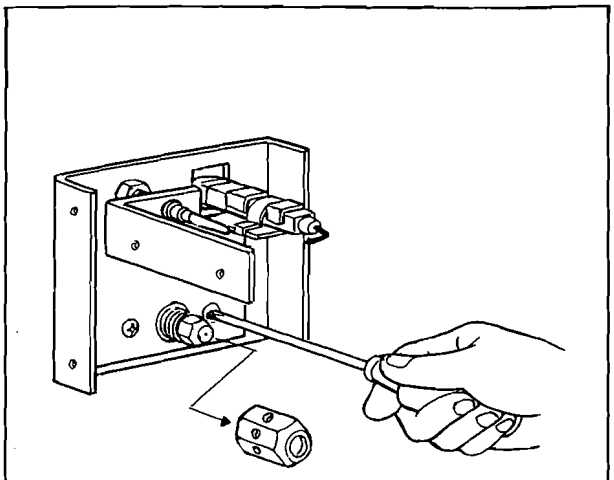

Fig. 11-3 Take off the burner joint out of the burner bracket. (Unscrew 2 screws)

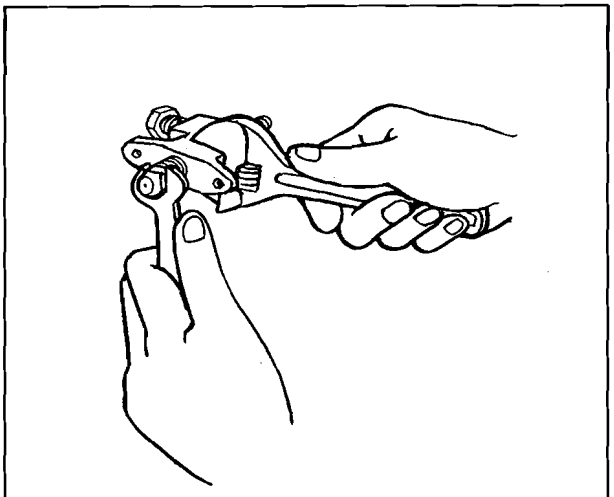

Fig. 11-4 Take out the orifice from the burner joint. (Turn the orifice counter-clockwise.)

11. Check Of The Ignition Plug & Thermocouple

1) Ignition Plug

For a proper ignition it is necessary to keep the ignition plug insulation dry and free from dirt. The gap between burner head and ignition plug shall be max. 3/16" (4.5mm) and min. 3/32" (2.5mm).

2) Thermocouple

To sense flame accurately, it is necessary to keep the gap between burner head and the top of thermocouple max. 7/32" (6mm) and min. 5/32" (4mm).

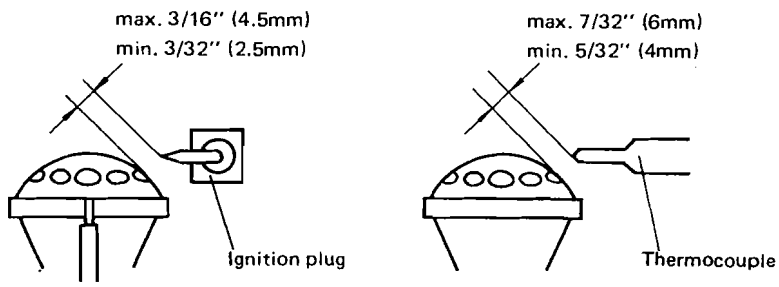

Fig. 12

12. Flue System

The flue system consists of the following parts:

1. Flue Tube (built in part of the boiler system of the cooling unit and cannot be removed).
2. Flue with bracket.
3. Flue Baffle with support wire.

The purpose of the flue system is to provide a draft which will pull the burner flame into the flue tube and supply sufficient primary and secondary air to the flame.

The right flue draft will not be obtained before the burner has warmed up the flue system to the proper temperature.

The flue baffle which is inserted in the flue tube distributes the heat produced by the burner to the boiler system.

It is important that the correct size of baffle is used and that it is correctly located in the flue tube in order to obtain the best cooling performance. The size and the distance between the lower end of the baffle and the lower end of the flue tube are shown in Table below.

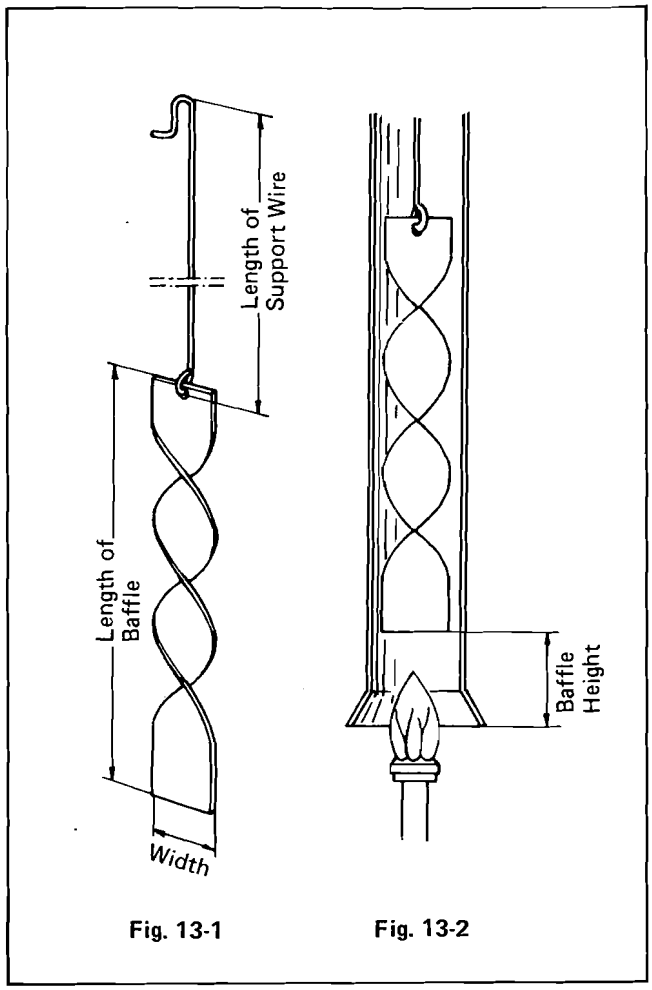

Fig. 13-1 Fig. 13-2

Model	Cooling Unit	Baffle Width x Length		Baffle Height		Length of Support Wire	
		mm	inch	mm	inch	mm	inch
SRAE0722 SRAE0732	833-0-0003-184-00 833-0-0003-198-00	22 x 160	0.87" x 6.30"	100	3.94"	545	21.46"
SRAE1222 SRAE1232	833-0-0003-185-00 833-0-0003-199-00	22 x 160	0.87" x 6.30"	100	3.94"	545	21.46"

Refer to Cooling Unit section of each Model's Spare Parts Lists.

13. Pressure Measuring Devices

Water U gauge

The water gauge consists of a glass U tube filled with water up to the mid-point. When gas pressure is exerted on one side of the gauge, the water on this side is forced down and there is a corresponding rise of water on the other side.
Water column pressure per square inch is indicated by the difference of the two columns of water measured in inches.

A convenient scale reading in inches and tenths of an inch is mounted between the two columns.
When reading the gauge, proceed as follows:
Fill the gauge with water up to the zero level. Connect the hose to the pressure testing outlet. Normal working pressure may force the water column to go down to 5.5 inches (140mm) below the zero level, whereas the other column rises up to 5.5 inches (140mm) above the point zero or mid-point. Adding the two will result in a water column of 5.5 + 5.5 = 11 inches (280mm).

For accuracy of measurement a water U gauge is far superior to a low pressure gauge. If a low pressure gauge is used, it should be checked for accuracy against a water U gauge occasionally.

Low pressure gauge (Fisher)

This gauge is calibrated to read in "inches of water column pressure". It is a standard manometer reading and is colored red.

How to use the pressure gauge

Fig. 14 shows the Fisher low pressure gauge and the water U gauge.

When testing the pressure on the different burners, remove the plug indicated with an arrow in Fig. 18 and fit the hose from the pressure gauge. It is very important that the gas-operated refrigerators operate at correct pressure, i.e. at the pressure specified for the refrigerator.

The pressure of the burner should be checked at the time the refrigerator is started up. After connecting the pressure gauge, set the Temp. Control at "COLDEST". Turn on the gas and light the burner. At the "COLDEST" setting the pressure reading should be at a minimum 10-1/2" (267mm) or a maximum of 11-1/2" (292mm) if the L.P. gas is supplied directly to the refrigerator from the regulator fitted on the gas bottle at pressure of 11" (280mm).

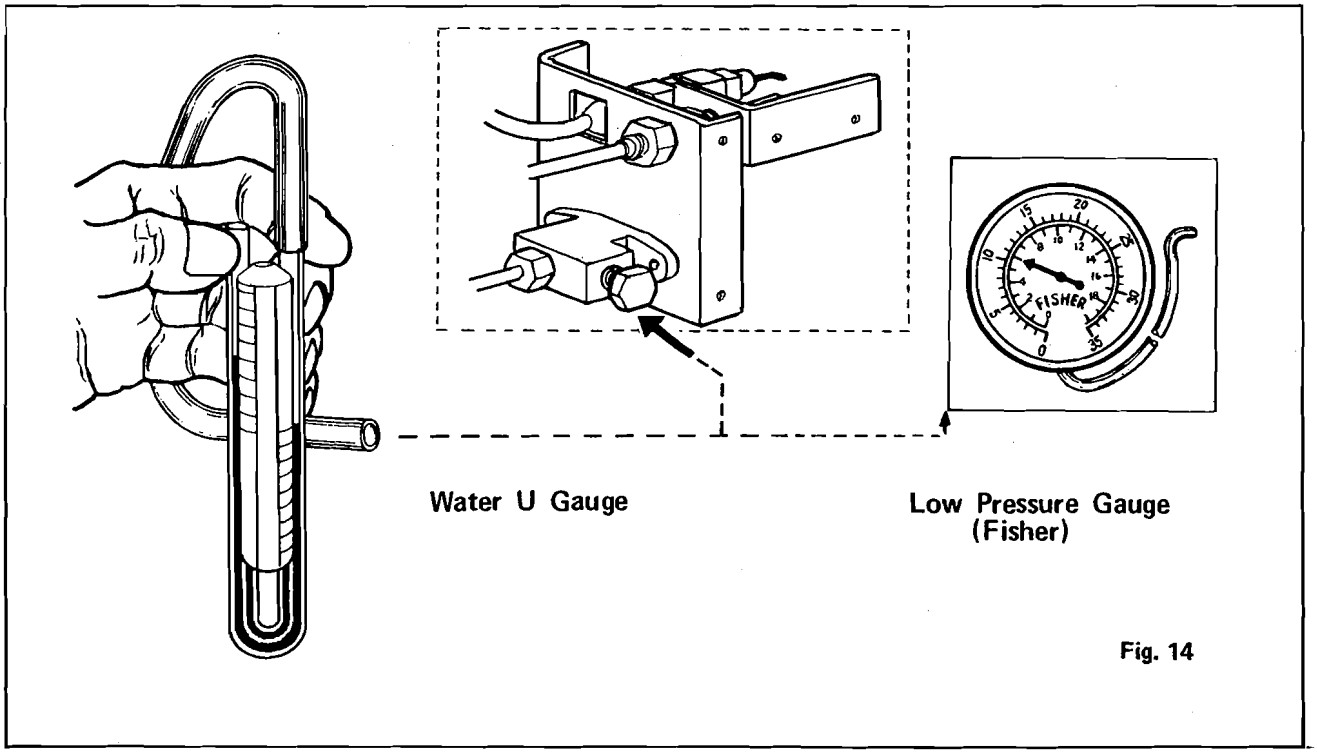

Fig. 14

Propane

At atmospheric pressure propane boils at -44° F.
At 189 pounds pressure, its boiling point is 100° F.

On a 70° F. day, propane will boil until gas pressure in supply cylinder, over liquid reaches 124 pounds.

A gallon of liquid propane will convert into 36.45 cubic feet of gas.

The average gas burner, using two (2) cubic feet of propane gas per hour, consumes the oxygen from nearly 50 cubic feet of air or about one-tenth of all air in an 8'x 12' cabin with 6.5' headroom.

Electricity: 3.4 B.T.U.s per watt.

Average LP-Gas capacities (PROPANE) (allow 20% for vapor space)

	Lbs. of gas	BTU's
1 - 5 gal. ICC tank	20	432,000
2 - 5 gal. ICC tank	40	864,000
1 - 7 gal. ICC tank	28	603,600
1 - 10 gal. ICC tank	40	864,000

	Propane	Butane
Pounds per gallon	4.24	4.84
Specific Gravity of gas	1.52	2.01
Specific Gravity of liquid	.509	.582
Cu. ft. gas per gallon liquid	36.3	31.5
Cu. ft. gas per pound	8.55	6.50
B.T.U. per gallon	91,500	102,600
B.T.U. per pound	21,560	21,180
B.T.U. per cu. ft.	2,522	3,261
Dew point in degrees F	44	24
Vapor pressure at 0° F	23.5	0
Vapor pressure at 70° F	124	31
Vapor pressure at 100° F	192	59
Vapor pressure at 110° F	223	71

11" of Water Column = 6 ozs. per Sq. In. Pressure

14. Power, Current, Resistance Chart

SRAE0722 SRAE0732	265 Watt	117 Volts	2.26 Amps	51.76 Ohms
SRAE1222 SRAE1232	296 Watt	117 Volts	2.53 Amps	46.24 Ohms
SRAE0732	240 Watt	12 Volts	20 Amps	0.6 Ohms
SRAE1232	240 Watt	12 Volts	20 Amps	0.6 Ohms

Ohms Law states: Power in watts (P) = Current in Amps. (I) Times volts in volts (E)
or P=IE and I=P/E
Then Ohms Law states: Volts in volts (E) = Current in Amps. (I) Times resistance in Ohms (R)
or E=IR and R=E/I

The resistance is so small it requires very expensive equipment to be able to measure with any degree of accuracy. It is therefore, found with much more ease using a "Volt-Watt" meter. We have found the "Simpson Model 392" to be very effective for this purpose. It will read directly in volts and watts in the 117 volt function.

For measuring power at 12 volts it is simpler to use an Ammeter to measure the current in Amps. The table above may be used in this case.

SRAE0732
SRAE1232 240W 20 Amps-12 Volts

VD		RW	RH + RW	Power Loss in Watts
10' of No. 14 = 0.58 Volt Drop	4.8%	0.0305	0.6305	12.2
20' of No. 14 = 1.11 Volt Drop	9.2%	0.061	0.661	24.4
30' of No. 14 = 1.59 Volt Drop	13.2%	0.0915	0.6915	36.6
10' of No. 12 = 0.37 Volt Drop	3.1%	0.0192	0.6192	7.7
20' of No. 12 = 0.72 Volt Drop	6.0%	0.0384	0.6384	15.4
30' of No. 12 = 1.05 Volt Drop	8.8%	0.0576	0.6576	23.0
10' of No. 10 = 0.24 Volt Drop	2.0%	0.0124	0.6124	5.0
20' of No. 10 = 0.48 Volt Drop	4.0%	0.0248	0.6248	9.9
30' of No. 10 = 0.70 Volt Drop	5.8%	0.0372	0.6372	14.9
10' of No. 8 = 0.14 Volt Drop	1.2%	0.00726	0.60726	2.9
20' of No. 8 = 0.28 Volt Drop	2.4%	0.01452	0.61452	5.8
30' of No. 8 = 0.42 Volt Drop	3.5%	0.02178	0.62178	8.7
10' of No. 6 = 0.09 Volt Drop	0.7%	0.00444	0.60444	1.8
20' of No. 6 = 0.18 Volt Drop	1.5%	0.00888	0.60888	3.6
30' of No. 6 = 0.26 Volt Drop	2.2%	0.01332	0.61332	5.3

15. Heating Elements For Different Refrigerators

Model	Cooling Unit Type No.	Heater Parts No.	Wattage (W)	Voltage (V)
SRAE0722	833-0-0003-184-00	4-2459-432-34	265	AC117
SRAE0732	833-0-0003-198-00	4-2459-432-32	AC265, DC240	AC117, DC12
SRAE1222	833-0-0003-185-00	4-2459-432-33	296	AC117
SRAE1232	833-0-0003-199-00	4-2459-432-31	AC296, DC240	AC117, DC12

Refer to Cooling Unit section of each Model's Spare Parts Lists.

16. Leveling

In the boiler of the cooling unit, ammonia vapor is distilled from an ammonia-water mixture and carried to the finned condenser where it liquefies. The liquid flows to the evaporator inside the cabinet where it cools, evaporating into a circulating flow of hydrogen gas. If the evaporator is not level the liquid readily accumulates, forming pockets which can impair the gas circulation or block it completely, resulting in suspension of cooling action.

When the trailer is stationary, it must be leveled to be comfortable to live in. If the refrigerator is properly installed, i.e. the ice-tray compartment shelf is parallel with the floor, the refrigerator will operate properly.

With the level placed on the ice-tray compartment shelf, and check to see the position of the bubble (if necessary, with the aid of a small mirror).
Adjust the position of the trailer so that the bubble is in the center ring of the level.

When the trailer is on tow, the continuous rolling and pitching movement will not affect the refrigerator as long as the movement passes either side of level but when the trailer is temporarily parked, the sensitivity of the refrigerator should be kept in mind.

17. Temperature Control

a) When the Temp. control is set at colder setting, refrigerating effect will be increased. This will tend to lower the temperature in the freezing compartment and in the food storage compartment.
When the Temp. control is set at middle position, medium refrigerating effect will be produced.

b) The setting position of the Temp. control should depend upon the refrigerator load.
When the food load is heavy, slide the Temp. control to the colder setting.
The colder setting of the Temp. control will be required in summer than in winter season.
The setting of the Temp. control determines the action of the Temp. control in relation to food storage compartment temperatures.

18. Thermal Sensor

The thermal sensor must be fastened on the holder located at the evaporator. See Fig-24. If the thermal sensor is not properly fastened on the holder, the burner will operate continuously at maximum flame. It will cause too low cabinet temperatures.

19. Storing Food In The Refrigerator

a) Proper refrigeration requires free air circulation within the food storage compartment. Restricted air circulation within the food storage compartment will cause higher cabinet temperatures.
Rearrange foods.

b) It is also essential that the shelves are not covered with paper or large storage containers.

c) Odorous foods or highly flavored foods should always be stored in covered dishes, plastic bags or wrapped in foil or waxed paper, to prevent food odors. Vegetables, lettuce, etc., should be covered to retain their crispness. Never put hot food into the refrigerator.

d) To reduce frost formation in and on the freezing compartment, cover stored liquids and moist foods and do not leave the door open longer than necessary.

e) When the refrigerator is heavily loaded, it takes longer for refrigerator temperatures to lower, requiring much longer time for ice-making. A very heavy load may also cause defrosting.

20. Cleaning

The cabinet interior should be cleaned regularly.
Wash the lining with lukewarm water to which a little soap flakes may be added. Dry thoroughly, especially around door frames and door gasket. Warm water only should be used to wash the cooling evaporator, ice-trays and shelves.

Plastic dishes may be washed in warm soapy water - not hotter than is bearable to the hand.
Do not expose them to dry heat. Never use strong chemicals or abrasive cleaning materials on any part of the cabinet.

21. Ice Cubes

a) Do not use warm water, as it takes longer to freeze.

b) Faster freezing will result if precooled water is used.

22. Travel Lock

The travel latch may be fitted to hold door(s) closed while in transit.

23. To Shut Off The Cabinet

If for any reason refrigeration is not required over a period of weeks, press OFF MODE SWITCH to stop the operation of the refrigerater, and fully close MANUAL VALVE on the back of unit.

The cabinet and ice trays should be emptied, cleaned and dried.
It is advisable to keep the door open a little when not in use for longer period of time.

24. Door Seal

a) It is essential, for correct operation, that the door gasket makes a good seal all around, against the front of the cabinet.

The gasket should just contact the front of the cabinet when the door is closed. This is normaly allowed for during manufacturing.

Failure of the door gasket to contact the front of the cabinet can be determined visually when the door is closed. Run a piece of thin cardboard along the door seal, inserted between the gasket and the cabinet front. Nowhere should the card feel loose.

b) Improper door sealing on cabinets provided with magnetic door gasket can be corrected by slackening the upper and lower hinge fixing screws and moving the door inwards or outwards by inserting or removing a washer to correct the door as required until a satisfactory seal is obtained.
If good seal cannot be obtained, a new gasket should be fitted.

c) It is also essential to check that the cabinet opening through which the freezing compartment enters the cabinet should be properly sealed by a gasket. If these seals leak, warm air enters the cabinet causing high cabinet temperatures and excessive frost formation on the freezing compartment.

25. Flue Obstructions

On gas refrigerators, the flue will requires occasional cleaning. To do this it will be necessary to gain access to the back of the cabinet. When cleaning the flue proceed as follows:

Unscrew the flame blow-out guard. Cover the entire burner assembly (See Figs. 11-1 through 11-4) with a piece of rag, then lift out the baffle on its support wire from the top of the flue tube.

From the top, clean the flue with a suitable flue brush. Also clean the baffle, before putting back in place.

An obstruction in the flue will reduce or stop flue draft. Flue obstructions will cause odors outside refrigerator, slow freezing and higher cabinet temperatures. Flue blockage may also cause the flame to burn outside the flue tube.

26. Odors Inside The Refrigerator

Odors inside the refrigerator are caused by improper food storage (See para. 19).

They may also be caused by too infrequent cleaning of the food compartment or the refrigerator has been shut off for some time with the door closed.

27. Odors From Fumes

a) Odors outside the refrigerator may be caused by gas leaks. Make sure that all burner gas valve on all gas appliances are closed.
Test gas connections and all joints in the gas line with soap and water solution, up to and including manual valve. Never look for a leak with an open flame. Use a flashlight when necessary in looking for soap bubbles caused by leaks. The gas line should be free of kinks and sharp bends.

Turn on manual valve, light bruner and test connections between the manual valve and the burner carefully with soap and water.

b) Odors outside the refrigerator may be caused by improper burner flame.

c) The flame touches side of the flue tube due to dislocation of the burner. Relocate.
Burner dislocation may also cause smoking and sooting of walls and ceiling.

d) Burner damaged. Replace.

e) The flame touches flue baffle. Correct position of baffle.

f) The flue tube is dirty. Clean the flue.
Turn to Fig. 8-3.

28. Operation Analysis For Cooling Unit

It is obviously important that all external factors affecting the unit should be checked properly before a unit is condemned as faulty and that emphasis has been placed upon the necessity for correct installation, upright refrigerator, correct heat input, baffle position, etc. If the refrigerator is the gas/electric model, check the size and the wattage of the electric heater and make sure that the heater element is inserted to its full length in its pocket or receptacle. See Fig. 19. If the electric heater is only partly inserted, the heat distribution will be incorrect, causing an excessive vaporizing of the ammonia within the boiler when operating on electricity. The same symptom can show up with too much or too little heat input either on electric or on gas operation and also if the refrigerator had been operating in an off-level position or with inadequate ventilation.

If an excessive vaporizing of the ammonia within the boiler occurs due to the above causes, the liquid mixture in the boiler becomes very weak and the pump will cease to operate, which means that the circulation of liquid stops with the result that the evaporator inside the cabinet ceases to produce cooling.

Such a blockage of the unit in the liquid circuit is most usually made evident by signs of overheating on the vapour pipe leading from the boiler to the condenser, the paint on this pipe being blistered and the metal becoming discoloured.

To remedy this fault it is recommended to remove the unit or refrigerator complete whenever possible and to allow sufficient time to cool down the unit. Turn the unit or refrigerator upside down several times, so that the liquid in the absorber vessel can be mixed with the liquid in the boiler. This procedure will restore the liquid balance in the unit.
Start the unit on "COLDEST".

The temperatures on various parts of a unit vary continuously when it is operating on thermostatic control and it is impossible to base a judgement on the symptoms given unless the refrigerator has been operating continuously on fully correct heat input for at least 5 hours, and preferably 12 hours, prior to examination. In many cases this can be arranged by a telephone call to the customer, asking him to switch the Temp. control to "COLDEST" on the day before the inspection call. If after 12 hours' operation on "COLDEST", the performance is satisfactory, the unit is not at fault unless the complaint is one of varying or intermittent performance. In this connection the room temperature at the time of the complaint must be considered, as a unit which is satisfactory at an ambient temperature of 50°F may not be satisfactory at 95°F.

In cases where satisfactory performance is obtained on "COLDEST" but not on other settings, the Temp. control is to be suspected.

When a normal unit is working on "COLDEST" the absorber coil will be warmer at the bottom than at the top. The absorber vessel will be warmer. The vapor cooling pipe from the boiler to the condenser will be warm, bearable to the hand, at the bend where it joins the condenser, with a gradual rise in temperature towards the boiler end.

29. Unit Filling Valve

The needle valve used for admitting the filling charge to a cooling unit is fitted to the unit's absorber vessel and is covered by a plastic cap. It is strictly applied provision of the warranty extended on the unit to the customer, the any interference with the filling valve will automatically void the warranty.

Unsatisfactory unit performance due to an ammonia leak can be determined in the case of a visible leak by traces of a yellow deposit at the point where the ammonia is bleeding. If there is a leak on the evaporator inside the cabinet, ammonia smell may result.

30. Things To Do Before Sending Back Defective Units To Distributor

1. Leveling of the refrigerator
2. Ventilation
3. Cleaning and proper size of burner orifice
4. Correct burner air adjustment
5. Proper gas pressure
6. Correct height of flame
7. Correct position of baffle in flue tube
8. No burnt-out heating element
9. Heating element in correct position
10. Correct size and wattage of heating element
11. Supply voltage corresponds to voltage stamped on heating element
12. No fluctuation in voltage supply
13. No loose electric connections
14. No unit leaks

31. Packing Of Defective Units

Particular attention must be paid to the packing of a replaced defective unit to ensure, during its return to the distributor, that it will not be damaged in transit.

When the replacement unit is supplied cased, careful note should be taken of the manner in which it is packed, to ensure that the form of packing adopted, i.e. the use of wood bracing and cardboard pads, is used when the defective unit is packed into the case.

Structural distortion may occur if the case containing the unit is roughly handled and if internal braces are not in position.

32. Wiring Diagram

Model SRAE 0732, 1232

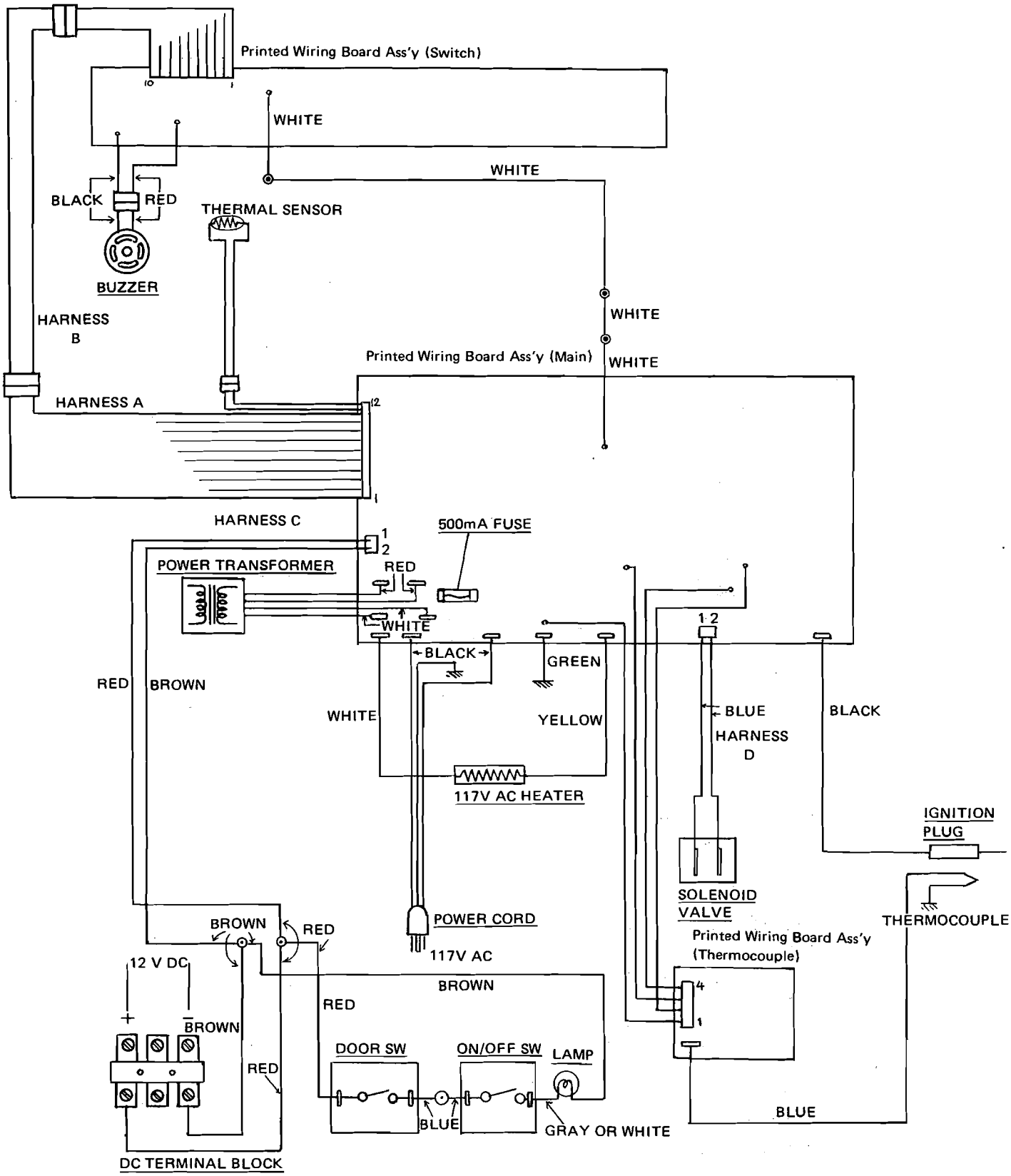

Fig. 15

NOTE
◉:WIRE JOINT

Model SRAE 0722, 1222

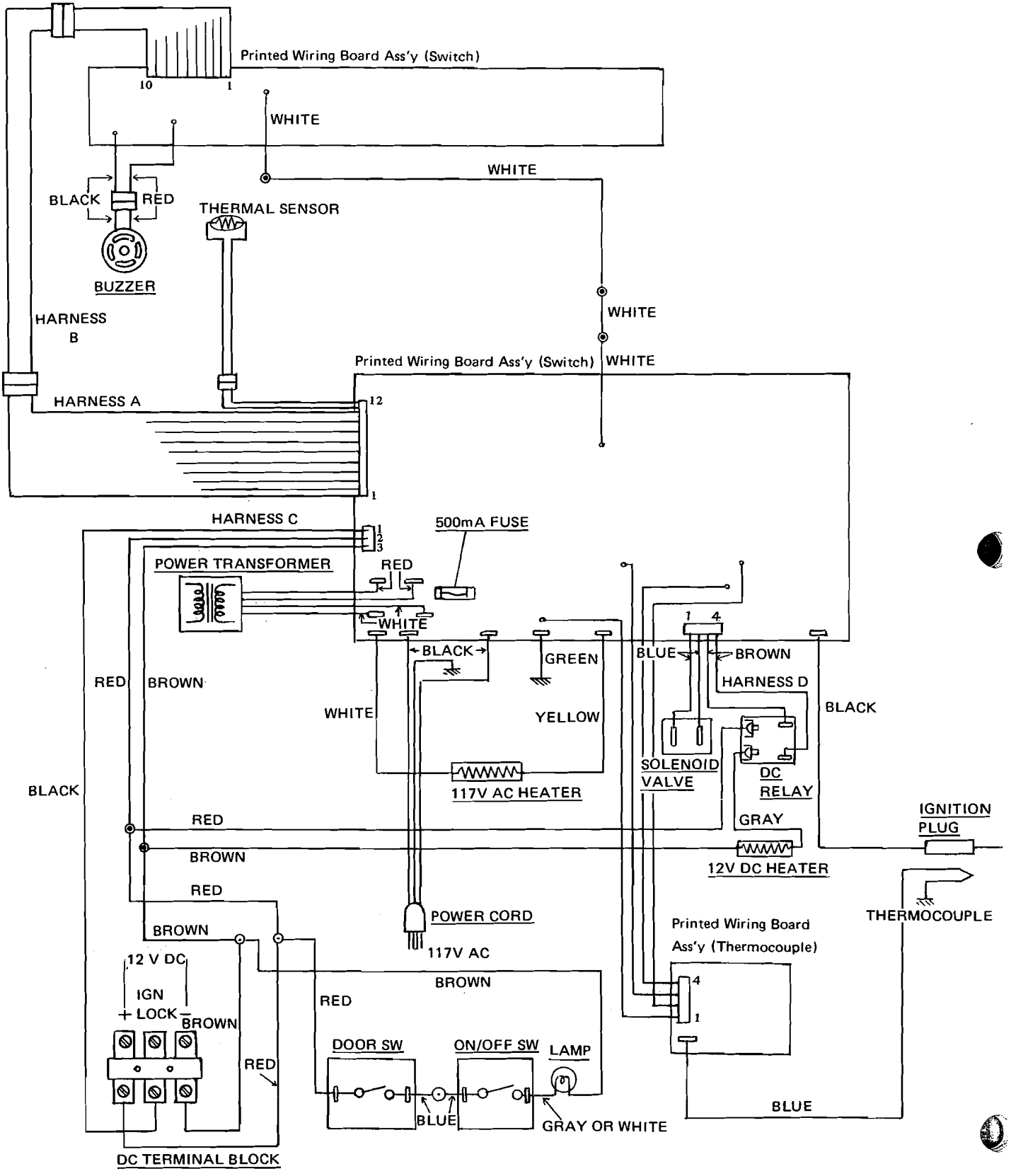

NOTE
◉:WIRE JOINT

Fig. 16

33. Trouble Shooting

Troubles	Probable Causes	Remedies
Refrigerator does not cool satisfactorily.	Low voltage	Supply voltage should be in the specified ranges: AC: 85–135V, DC: 10.5–16V
	Refrigerator not level	Check the leveling of the refrigerator.
Gas/Elec. Mode	Air circulation around cooling unit is not proper.	Be sure that refrigerator is properly ventilated.
	The evaporator is heavily coated with frost.	Defrost.
	Air leakage into cabinet	Check fit of door gasket.
	Temp. Control set improperly.	Reset the Temp. Control.
Elec. Mode (AC)	Defective heating element	Replace.
	Ignition switch off	Turn on.
Elec. Mode (DC)	Defective heating element	Replace.
	DC power supply connected reversely	Check.
	Orifice clogged	Unscrew orifice and blow clear or wash in alcohol. Do not use wire or pin to clean orifice.
	Flue baffle not inserted into the central tube of the cooling unit.	Check.
	Gauze in burner head clogged	Clean.
Gas Mode	Burner failed.	Replace.
	Burner dislocated	Relocate.
	Supply gas pressure too low	Check gas supply & adjust to 11" WC.
	Improper gap between burner head and Ignition Plug	Adjust the gap (3/32"-3/16").
	Ignition Plug dews	Desiccate the Ignition Plug
	Improper gap between burner head and the top of thermocouple	Adjust the gap (5/32"-7/32").
	Thermocouple failed	Replace
Refrigerator too cold	Temp. Control set improperly	Reset the Temp Control.
Gas/Elec. Mode	Room temperature too low Thermal sensor set improperly	Reset the Temp. Control Check.
Gas Mode	Solenoid valve failed.	Replace.
Odor from fumes	Burner dislocated	Relocate.
	Burner failed	Replace.
Gas Mode	Flue baffle too low	Correct the position of the baffle.
	Flue is dirty.	Clean flue.

All the above instructions are to be followed closely. The refrigerator is quality-guaranteed. However, we are not responsible for any failure caused by improper adjustments and unfavorable installation condition.
Contact service point or distributor service dept. for assistance..

Flame Fails To Ignite-Gas Mode (Check With Gas Mode Switch ON)

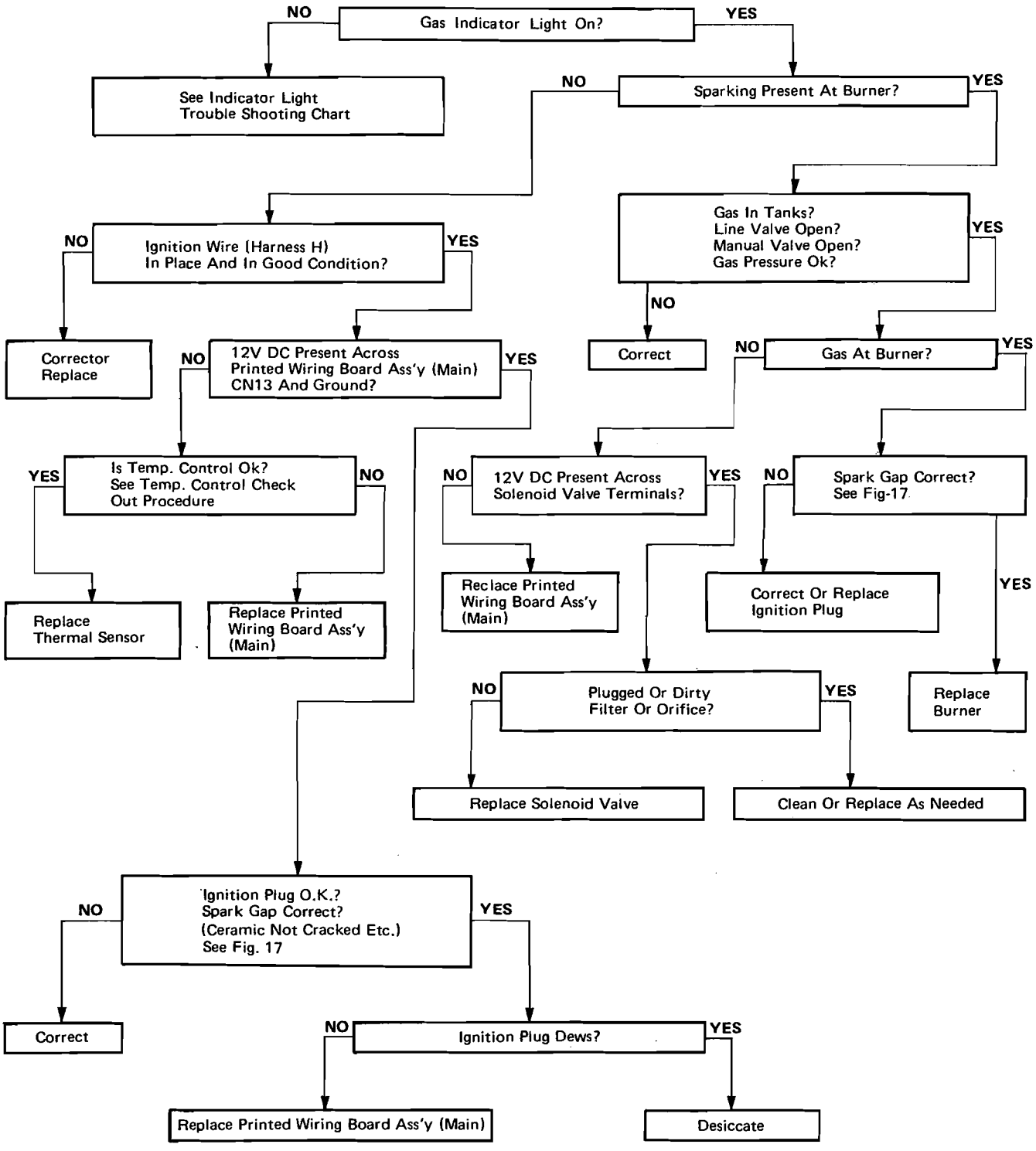

Flame Ignites But Goes Into Lockout Repeatedly Nuisance Lockouts (Check With Gas Switch "ON")

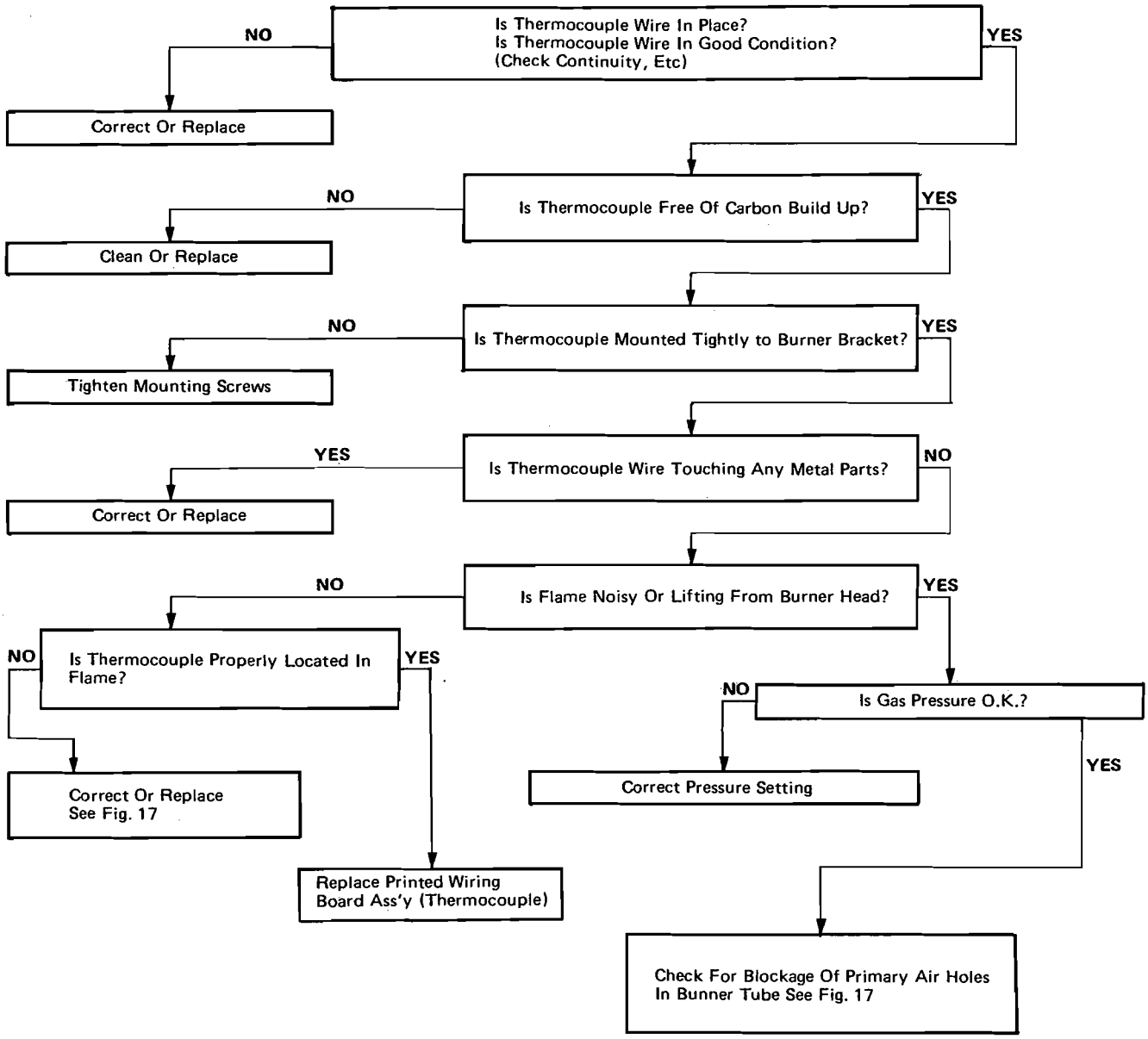

"Gas" Indicator Light Failure (Check With Gas Mode Switch "ON")

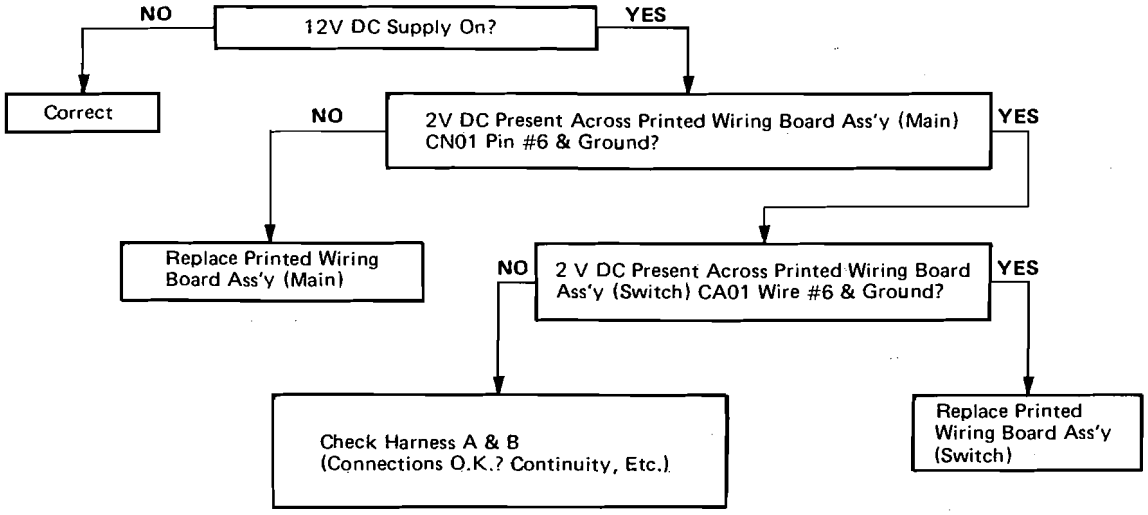

"AC" Indicator Light Failure (Check With AC Mode Switch "ON")

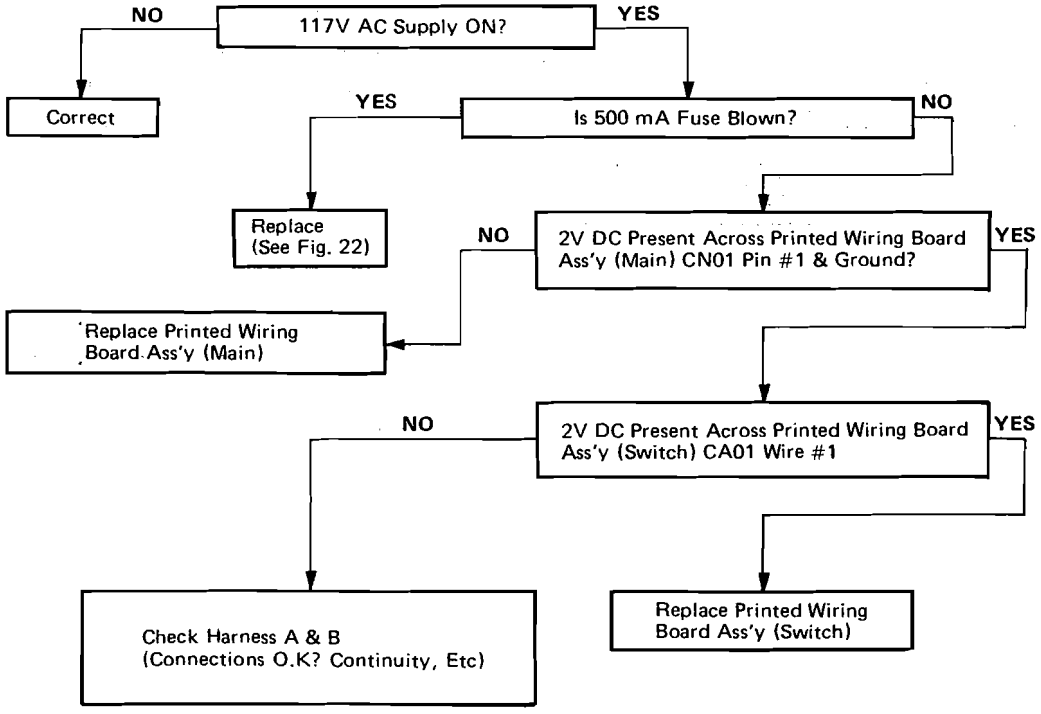

"DC" Indicator Light Failure (SRAE 0732, 1232 Only) (Check With Elec. Mode Switch ON And AC Supply Cord Unpluged)

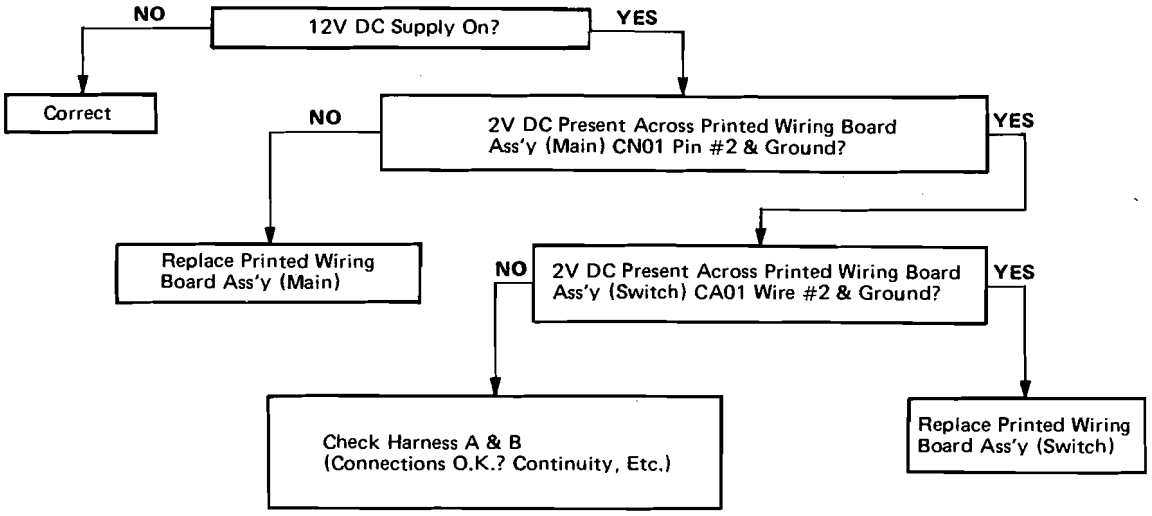

Temperature Control Checkout Procedure (Check With Gas Mode Switch "ON")

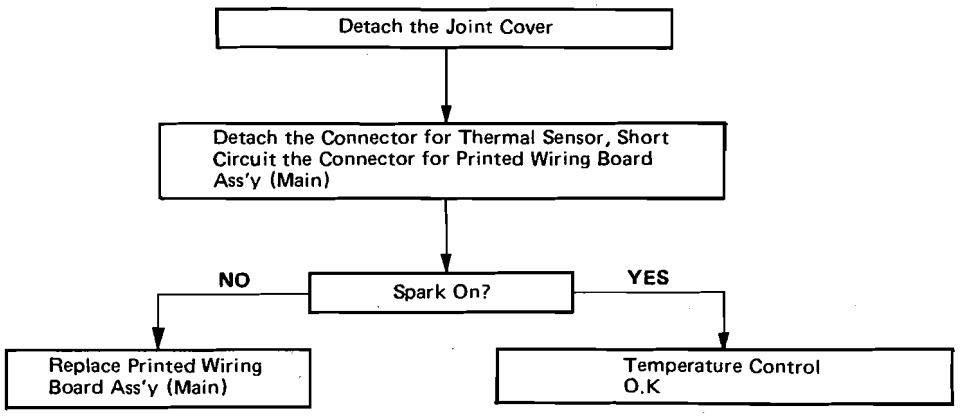

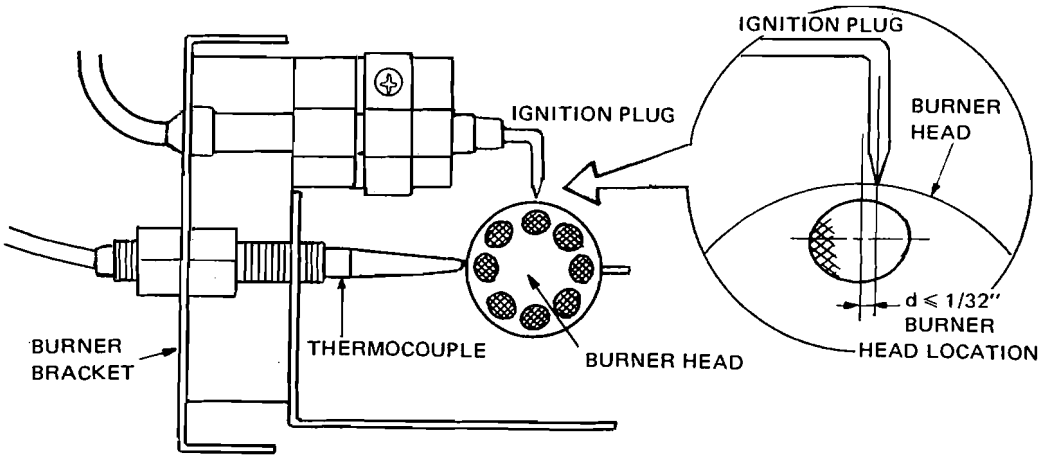
IGNITION PLUG
BURNER
HEAD
IGNITION PLUG
d ≤ 1/32"
BURNER
HEAD LOCATION
BURNER
BRACKET
THERMOCOUPLE
BURNER HEAD

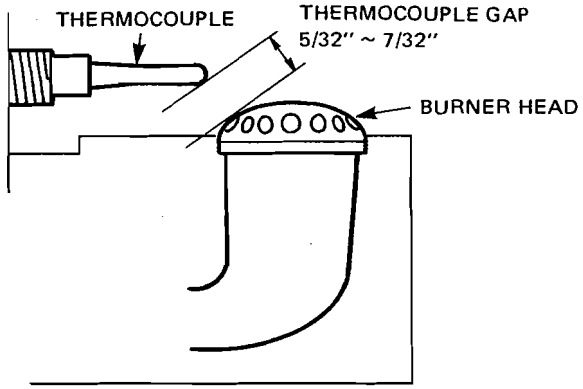
THERMOCOUPLE
THERMOCOUPLE GAP
5/32" ~ 7/32"
BURNER HEAD

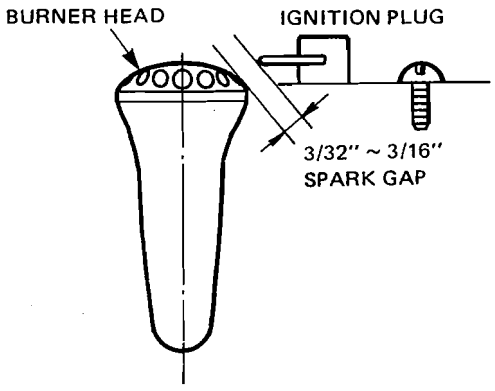
BURNER HEAD
IGNITION PLUG
3/32" ~ 3/16"
SPARK GAP

Fig. 17

34. Changing Printed Wiring Board Ass'y (Switch) and Buzzer

a) After removing the screws which hold CONTROL CASE, and CONTROL CASE CAP LEFT/RIGHT. Then remove CONTROL CASE.

b) Remove CONNECTOR of PRINTED WIRING BOARD ASS'Y (Switch).

c) Remove CONNECTOR of BUZZER ASS'Y.

d) After removing the screws which hold Printed Wiring Board Ass'y on WIRING BOARD MOUNTING BRACKET, remove Printed Wiring Board Ass'y.

e) After removing the screws which hold BUZZER ASS'Y, remove BUZZER ASS'Y.

f) Install new parts in reverse order of removal.

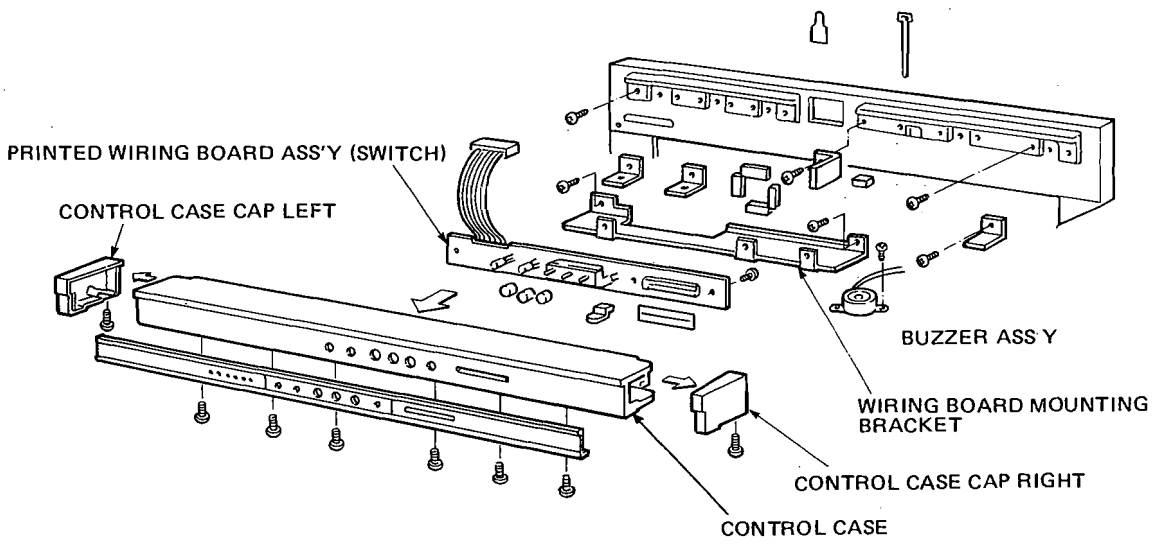

Fig. 18

35. Changing Printed Wiring Board Ass'y (Main)

a) After removing the screws which hold FLAME BLOW-OUT COVER, remove FLAME BLOW-OUT COVER. Remove the screws of BURNER BRACKET. (See Fig. 11-1, 11-2)

b) After removing the screws which hold CASE WIRE SPLICER, remove CASE WIRE SPLICER.
Remove COUPLER and DEPRESSING TERMINAL. Remove NYLON CLIP which holds LEAD and remove the screws of POWER CORD.

c) After taking off the tabs of GENERATOR COVER, remove SHUTTER.
After removing HEATER SUPPORT, remove HEATER by pulling upward.

d) Remove the screws (x4) which hold CONTROL BOX REAR ASS'Y. Remove CONTROL BOX REAR ASS'Y by pulling backward.
After removing the screws (x4) which hold CONTROL BOX CAP, remove CONTROL BOX CAP.

f) Remove all COUPLERS connected to Printed Wiring Board Ass'y (Main). After removing the screws (x5) which hold Printed Wiring Board Ass'y (Main), pull out Printed Wiring Board Ass'y (Main.)
Install new Printed Wiring Board Ass'y (Main) in reverse order of removal.

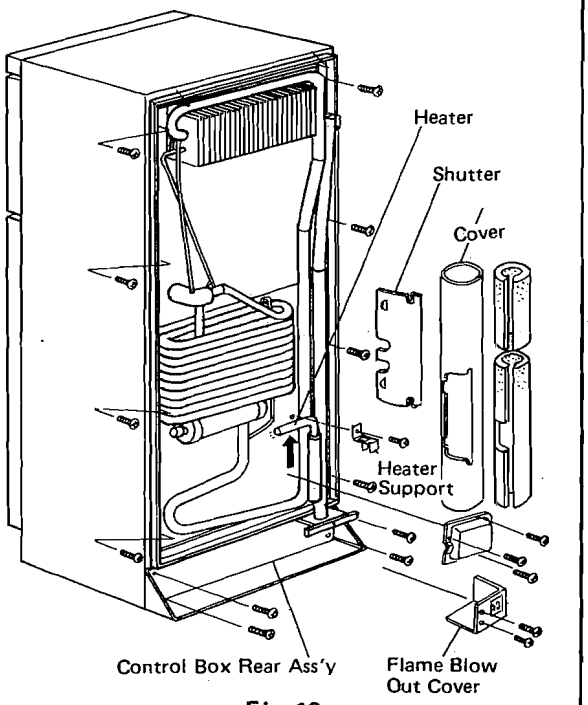

Fig. 19

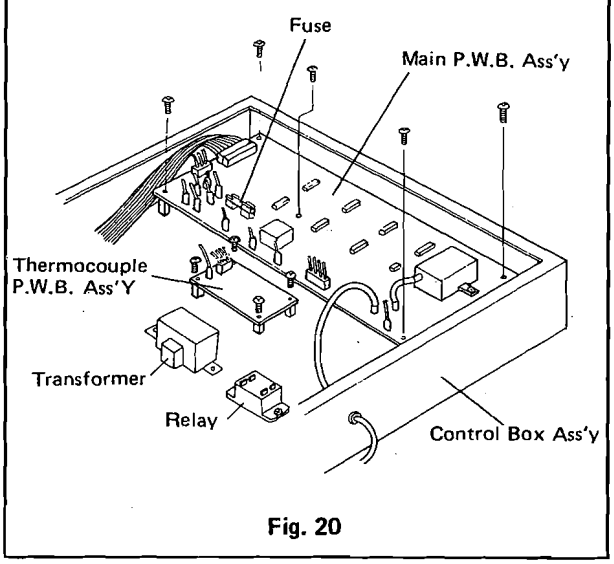

Fig. 20

36. Changing of Fuse

After carrying out the process (a-d; Para 35), remove FUSE and replace. (See Fig. 19 – 20)

37. Changing Printed Wiring Board Ass'y (Thermocouple)

After carrying out the process (a – d; Para. 35), remove COUPLERS from Printed Wiring Board Ass'y (Thermocouple) and THERMOSENSOR LEAD.
Remove the screws (x4) of Printed Wiring Board Ass'y (Thermocouple). Install new BOARD in reverse order of removal. (See Fig. 20)

38. Changing Transformer

After carrying out the process (a – d; Para. 35), remove COUPLERS (LEADS: white x 2, red x 2) connected to Printed Wiring Board Ass'y (Main).
Remove the screws of TRANSFORMER and change TRANSFORMER. Install new TRANSFORMER in reverse order of removal. (See Fig. 20)

39. Changing Relay (only for SRAE 0732, 1232)

After carrying out the process (a – d; Para. 35), remove the screws which hold LEADS (red, gray) to RELAY. Then remove the COUPLER (LEAD: BROWN).
Remove the screws of RELAY and change RELAY. Install new RELAY in reverse order of removal.
(See Fig. 20.)

40. Changing Ignition Plug

a) Carry out process (a – d; Para. 35).

b) Remove IGNITION BRACKET. Then pull off the coupler connected to Printed Wiring Board Ass'y (Main) and change IGNITION PLUG.
Replace the parts in reverse order of removal.

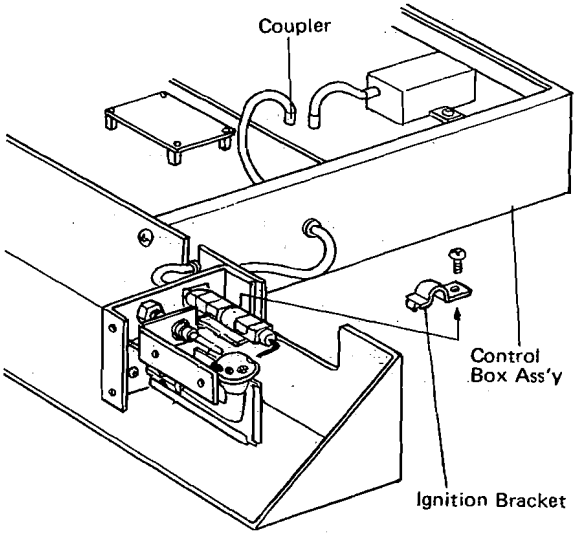

Fig. 21

41. Changing Thermocouple

a) Carry out process (a – d; Para. 35).
Take off NYLON CLIPS fastened to the bottom of CONTROL BOX.

b) Pull off the couple (lead: blue) connected to Printed Wiring Board Ass'y (Thermocouple), then pull out the lead (blue) from CONTROL BOX.
Take off NYLON CLIPS (x2) fastened to CONTROL BOX REAR ASS'Y. Remove the nut on JOINT PLATE of Thermocouple and change Thermocouple.
Replace the parts in reverse order of removal.
The distance between Burner and the tip of Thermocouple is shown in Fig. 17.

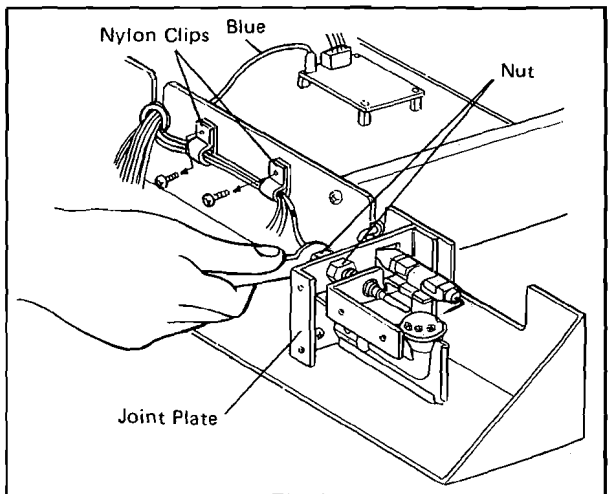

Fig. 22

42. Changing Thermal Sensor

a) Remove the two screws securing the fin cover, and take down the fin cover, and remove the screw securing the thermal sensor clamp and dismount the thermal sensor clamp.
Then take out thermal sensor from the evaporator.

b) Take off THERMAL LEAD CLIPS. Remove, disconnect THERMAL SENSOR. Pull out THERMAL SENSOR from the back of refrigerator.
Install new one in reverse order of removal. Seal up the point where SENSOR is inserted at the back of refrigerator with SILICONE SEAL.

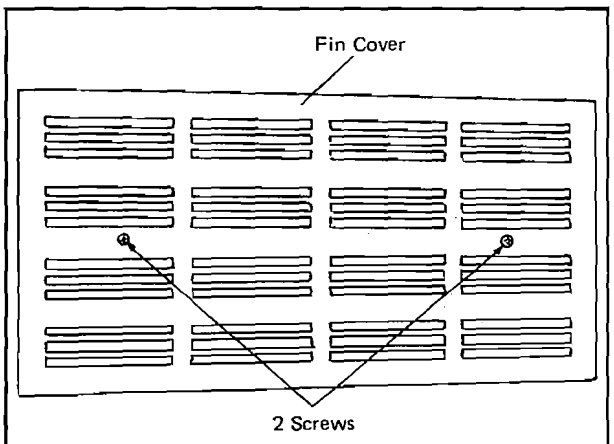

Fig. 23

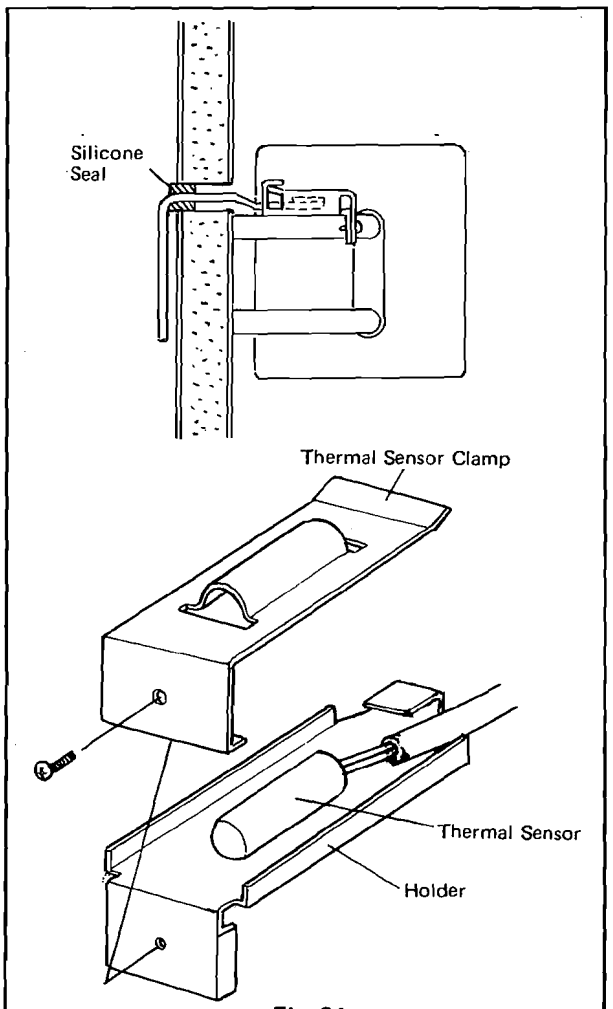

Fig. 24

43. Changing Heater

SRAE 0732, 1232

Carry out process (a – d; Para. 35).
Detach NYLON CLIPS fastened to CONTROL BOX, and disconnect the JOINT WIRE connected to 3 brown leads and the one connected to red lead. Disconnect gray lead connected to DC RELAY. Take off the coupler (bold/white) connected to Printed Wiring Board Ass'y (Main). Disconnect leads (white, brown, gray, yellow) from CONTROL BOX. After changing HEATER, replace these parts in reverse order of removal.

SRAE 0722, 1222

Carry out process (a. c. d; Para. 35).
Detach LEAD STOPPER, NYLON CLIPS and POWER CORD STOPPER.
Remove CONTROL BOX from the back of refrigerator and then remove the LID of CONTROL BOX.
Detach NYLON CLIP fastened to the bottom of CONTROL BOX.
Disconnect the coupler of HEATER CORD (Black x 2), then change. Replace the parts in reverse order of removal.

44. Changing Solenoid Valve

Disconnect the coupler (Blue Lead x 2) connected to SOLENOID VALVE.
Remove the Nuts (x 2) at right/left of SOLENOID VALVE, remove SOLENOID VALVE STOPPING SCREWS. When changing, seal to protect against Gas leakage and replace these parts in reverse order of removal.

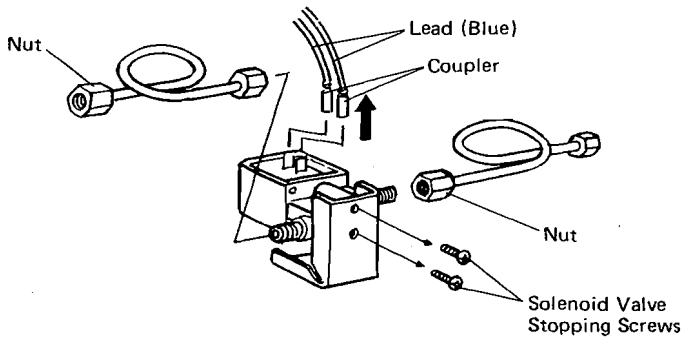

Fig. 25

45. Changing Gas Filter

a) Remove the Nut.

b) Remove FILTER UNIT from MANUAL VALVE.

c) When changing FILTER UNIT, apply GAS SEALER. Install in reverse order of removal. (Refer to Fig. 26 for MANUAL VALVE changing.)

46. Changing Manual Valve

a) Remove the Nut at right of FILTER UNIT.

b) Remove Filter Unit from MANUAL VALVE.

c) Remove the screws of MANUAL VALVE, then remove MANUAL VALVE.

d) Install new MANUAL VALVE in reverse order of removal. Apply GAS SEALER before replacing the Nuts.

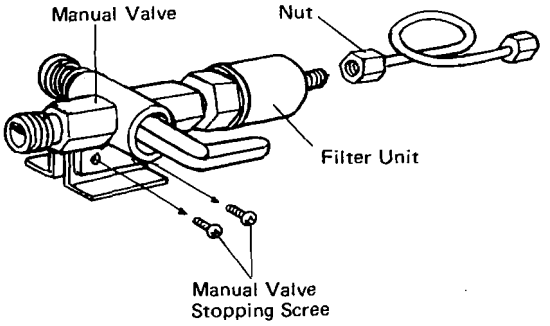

Fig. 26

47. Changing Cooling Unit (SRAE 1222, 1232)

a) Carry out process (a – c; Para. 35).
Remove THERMAL SENSOR in the manner mentioned above. (Para. 42)

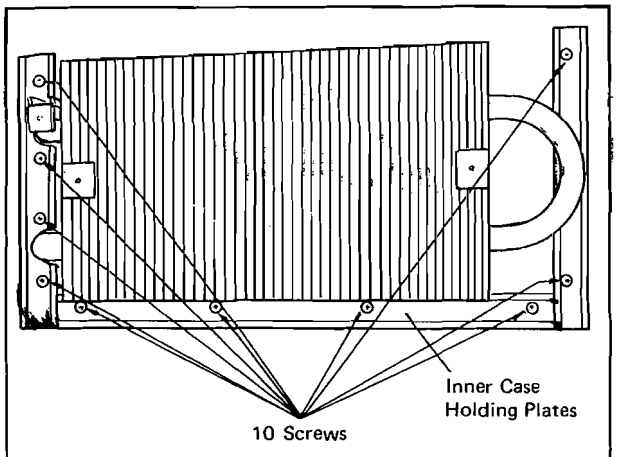

Fig. 27

b) Remove the ten screws which are securing the three inner case holding plates, and dismount the holding plates. Then, take out the four set-screws for the freezer evaporator.

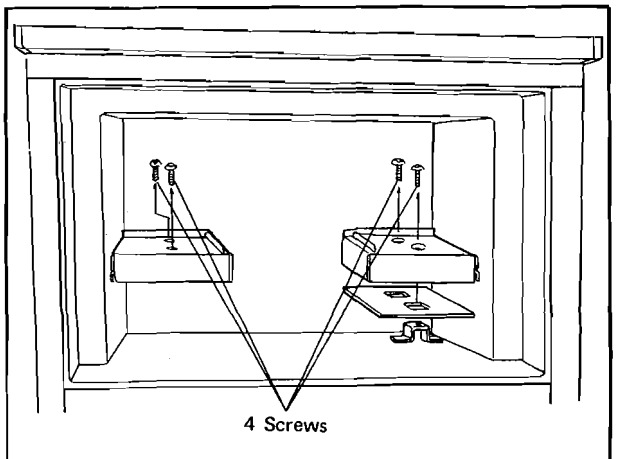

Fig. 28

c) Remove the 8 screws that are fastening the unit, and draw out the unit horizontally backward. (See Fig. 31)

48. Changing Cooling Unit (SRAE 0722, 0732)

a) Carry out process (a, b; Para. 35).
Remove THERMAL SENSOR in the manner mentioned above (Para 42).

b) Remove the 8 screws which are securing the three inner case holding plates, and dismount the holding plates.

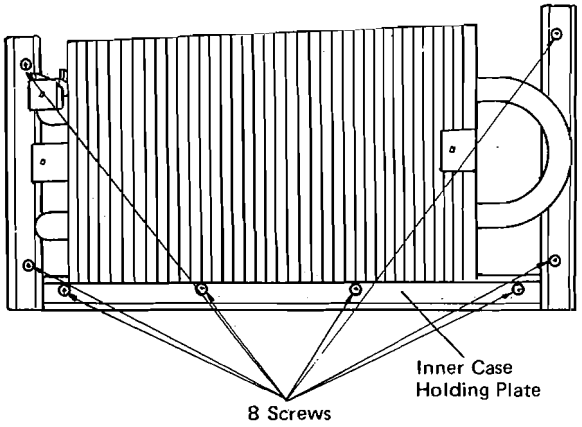

Fig. 29

c) Loosen 2 set screws in FREEZER and remove 4 set screws.

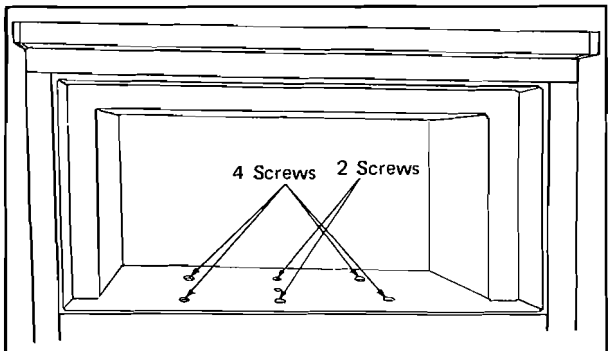

Fig. 30

d) Remove the 8 screws that are fastening the unit, and draw out the unit horizontally backward.
(SRAE 0722/0732/1222/1232)

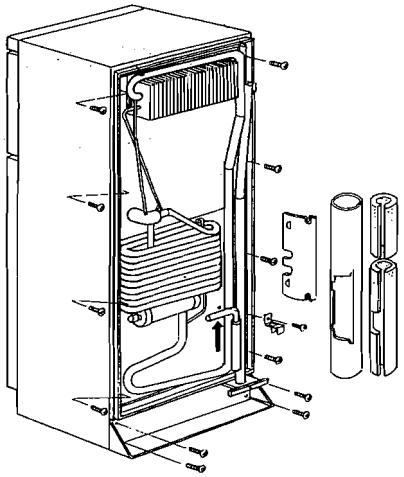

Fig. 31

When mounting a new unit glue the sealing material.

SRAE 1222/1232

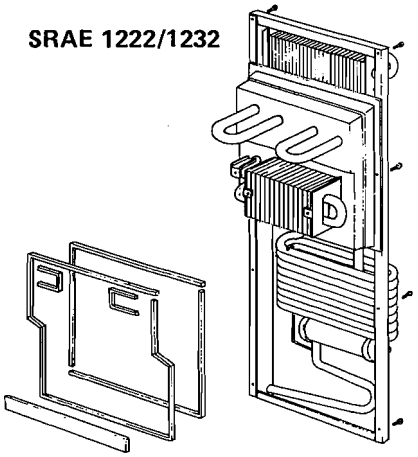

SRAE 0722/0732

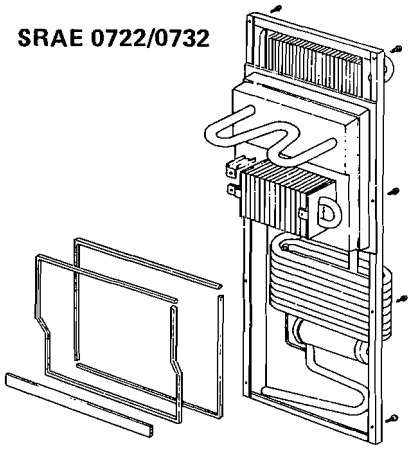

Fig. 32

49. Changing Door Gasket

Open the DOOR and remove DOOR GASKET from DOOR FRAME. Then press in new DOOR GASKET as shown in Fig. 33.

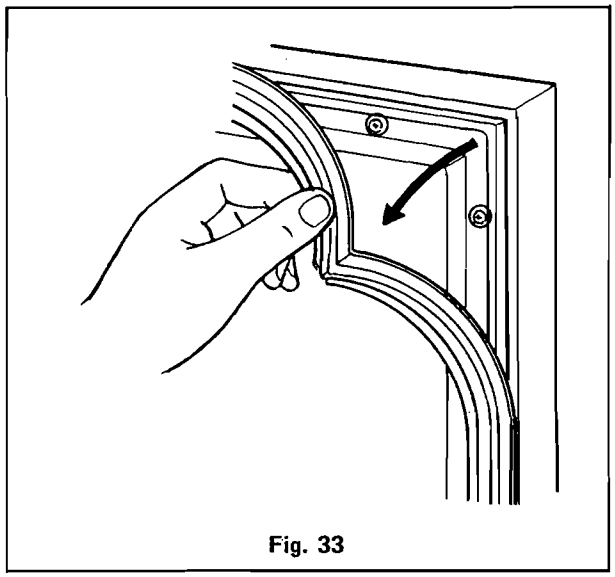

Fig. 33

50. Changing Door Liner

Remove DOOR GASKET in the manner mentioned above (Para 49). Remove the screws of DOOR LINER and change DOOR LINER.
Install DOOR LINER and DOOR GASKET in reverse order of removal.

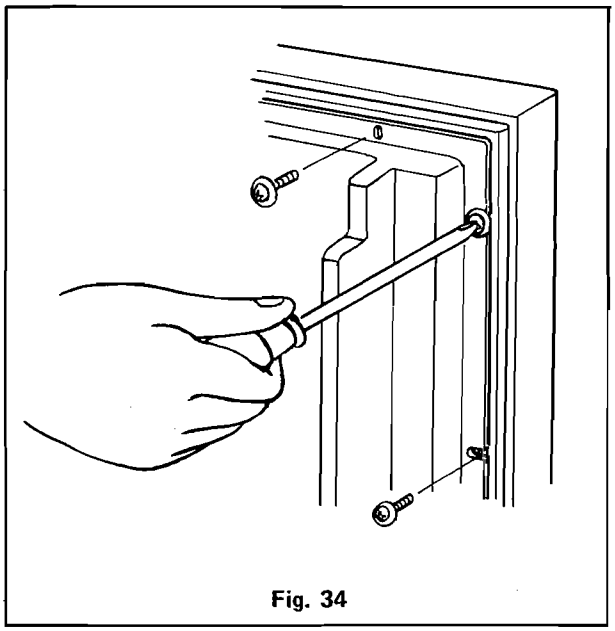

Fig. 34

51. Instruction For Mounting The Door Panel

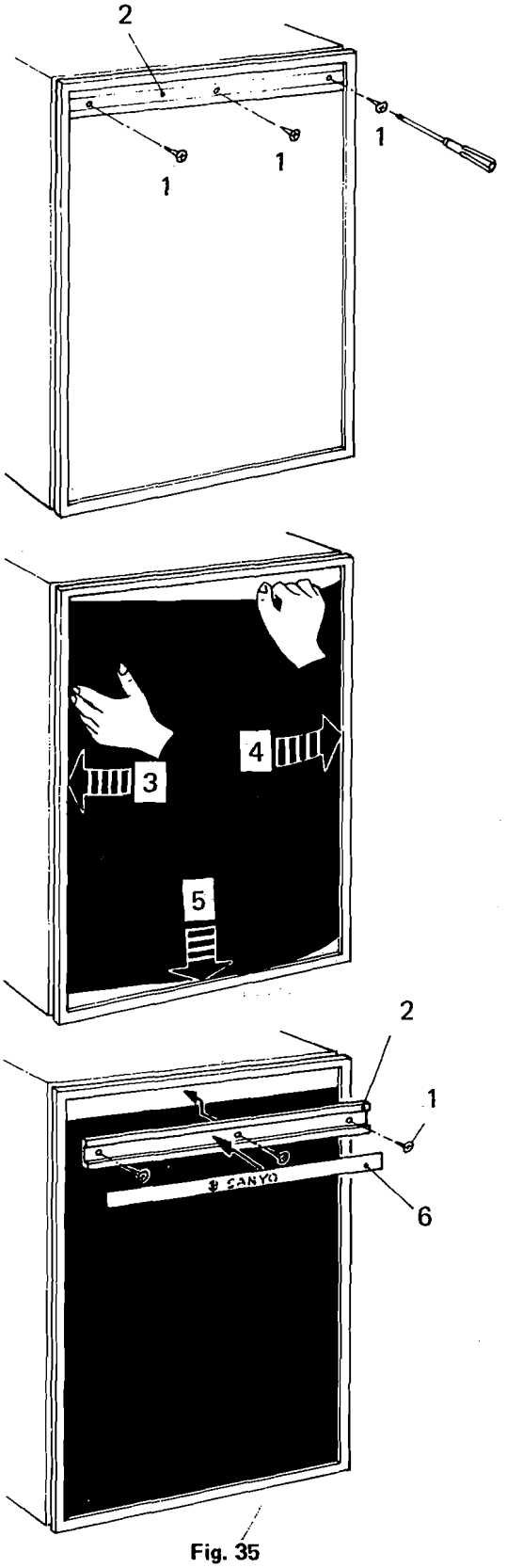

Fig. 35

The refrigerator is normally delivered without door panel. When mounting the panel, proceed as follows.

1. Remove the top decoration base (2) with its three screws (1).
2. Insert one of the vertical edges of the panel into the groove of the door frame (3).
3. Bend the panel gently so that the free side of the panel can be slipped into the corresponding groove of the door frame (4).
4. Push the panel downwards so that the lower horizontal edge of the panel is fitted into the bottom groove (5).
5. Between the upper edge of the panel and the door frame there is now a gap which should be covered by the decoration base.
6. Put the base across the door so that the gap is covered. Secure the decoration base by means of the three screws (1).
7. Peal off the backing paper of the label (6), attach it to the decoration base.

Panel dimensions

Thickness max. 5/32" (4mm)

TYPE		HEIGHT	WIDTH
SRAE 0722 0732	upper	10-11/32" (263mm)	23-1/8" (588mm)
	lower	36-5/8" (930mm)	23-1/8" (588mm)
SRAE 1222 1232	upper	13-7/8" (352mm)	23-1/8" (588mm)
	lower	36-5/8" (930mm)	23-1/8" (588mm)

52. Interchanging Of Door Opening

The door hinging of this refrigerator has been designed to permit you to arrange either right hand or left hand door opening.

HOW TO CHANGE THE OPENING:

1. With the freezer door closed, remove the top hinge by undoing the three screws securing it to the top of the cabinet.
2. Remove the freezer door with the top hinge.
3. Unscrew and remove the center hinge pin.
4. Remove the food storage door.
5. Unscrew the travel latch and the center hinge and change their positions to opposite side.
6. Unscrew the bottom hinge and change its position to opposite side. (Do not forget to pull out the hinge pin and insert it into the another hole.)
7. Set the food storage door.
8. Fit the center hinge pin.
9. Set the freezer door with the top hinge on the opposite side and secure the top hinge by means of the three screws.

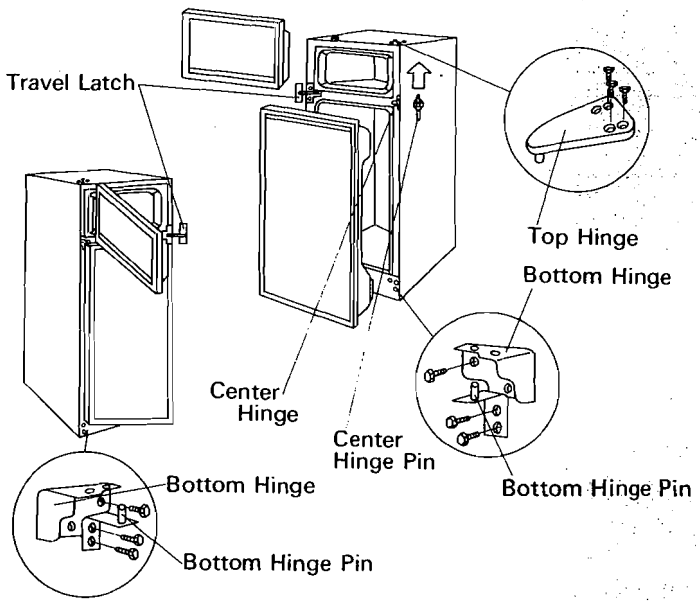

Fig. 36

53. Changing Cabinet Frame Ass'y

a) Following 1 – 6 of Changing Door Openning, remove FREEZER FOOD STORAGE DOOR, TOP HINGE, CENTER HINGE, CENTER HINGE PIN, BOTTOM HINGE and BOTTOM HINGE PIN. (Refer to Fig. 36)

b) Following Para 34 (CHANGING Printed Wiring Board Ass'y (Switch) AND BUZZER A – B), remove Printed Wiring Board Ass'y (Switch) and WIRING BOARD MOUNTING BRACKET. (Refer to Fig. 18)

c) Remove PLATE MTG. UNDER LEFT AND RIGHT, LEAD PROTECTOR and SUPPORT SWITCH Printed Wiring Board Ass'y (Refer to Fig. 18).

d) Remove LEAD COVER and GROMMET.

e) Remove NUT DOOR SWITCH and SHIM from CABINET FRAME BOTTOM.

f) Remove CABINET PACKING Ass'y after removing the screws of CABINET FRAME Ass'y.

g) Paste FRAME SEAL A. B, CABINET PACKING SEAL and CABINET PACKING SEAL BOTTOM, and CABINET PACKING SEAL TOP onto new CABINET Frame Ass'y.

h) Install CABINET Frame Ass'y and other parts in reverse order of removal, and finally, paste CABINET PACKING TOP SEAL. Then apply SILICONE – SEALING all around the contact points of F – BREAKER located at the front of CABINET Frame Ass'y FREEZER.
Also apply SILICONE – SEALING to Cabinet Frame Ass'y Bottom.