SetPower

TC Series

User's Manual

CONTENT

1 SAFETY INFORMATION 1

2 GETTING STARTED 2 – 3

2.1 DATA SHEET 2

2.2 INSTALLATION 3

2.3 HOW TO USE THE REFRIGERATOR 4

3 OPERATION 4

4 FILLING 5

5 DEFROSTING 5

6 MAINTENANCE 6

7 CLEANING 6

8 SUGGESTIONS 6

9 GENERAL SAFETY MESSAGES 6

10 NOTICE 6 – 7

11 FAULTS 8

SAFETY INFORMATION

Please read this operating manual carefully before starting the appliance. Keep it with original package in a safe place for future reference. If the appliance is passed on to another person, this instruction manual must be handed over to the user along with it.
The manufacturer cannot be held liable for damage resulting from improper usage or incorrect operation.

WARNING

- This appliance is not intended for use by persons (including children) with reduced physical, sensory or mental capabilities, or lack of experience and knowledge, unless they have been given supervision or instruction concerning use of the appliance by a person responsible for their safety.
- Children should be supervised that they do not play with the appliance.
- Do not store explosive substances such as aerosol cans with a flammable propellant in this appliance.
- Do not use this appliance near direct heat sources, for example, a cooker, radiator or exposing it to direct sunlight.
- The appliance shall not be exposed to rain. Place the refrigerator on a dry, protected surface, away from edges.

NOTICE

- Make sure your outlet voltage and circuit frequency correspond to the voltage indicated on the label pasted on the device.
  Notice: This portable appliance designed for personal use, specially use in car, caravans and other vehicles as well as RV, truck and boat.
- Plug into 12/24V DC power with standard DC power cord, with AC adapter to access 110/240V AC. No responsible for the damage by transforming the power cord in personal.
- Do not immerse the power cord or appliance in water or any liquid for your safety.
- Make sure your hands keep dry before you plug into power or open the appliance.
- The installation of AC equipment on the boat shall be carried out by qualified person.
- Proper voltage must be supplied for reliable operation. see the correct voltage in nameplate.
- Allow 2-4 inches of space around the appliance at all times for proper ventilation.

USE POWER CORD IN PROPERLY

- Do not kink or damage the power cord.
- Do not pull the appliance with power cord.
- Do not wreathe the appliance with power cord.
- Do not use power cord as handles.
- Do not pull the power cord at sharp edges or corner.
- Keep the power cord away from the heat source.
- Do not touch exposed and uninsulated power cord, keep notice on AC power cord.
  Notice: Use on board, please check whether the system are installed with fuse and earth-leakage protection when the appliance connect with AC power
- Do not use power cord in wet environment.

GETTING STARTED

DATA SHEET

MODEL	TC20	TC35
Dimensions LxWxH	579x365x357 mm	584x377x502 mm
	22.7x14.3x14 inch	22.9x14.8x19.7 inch
Net Weight	11.8 kg	13.4 kg
	26 lbs	29.5 lbs
Storage Volume	21.1 quarts	37.0 quarts
	20 liters	35 liters
Voltage	DC 12/24V	DC 12/24V
Rated Current	5.8A/2.9A	5.8A/2.9A
Refrigerant Gas	R134a-CFC Free	R134a-CFC Free
Temperature Range	-20°C to +20°C (-4°F to 68°F)	-20°C to +20°C (-4°F to 68°F)

TC20



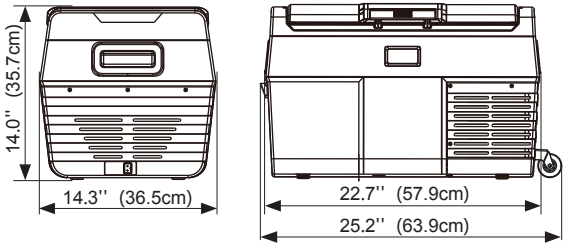

TC35



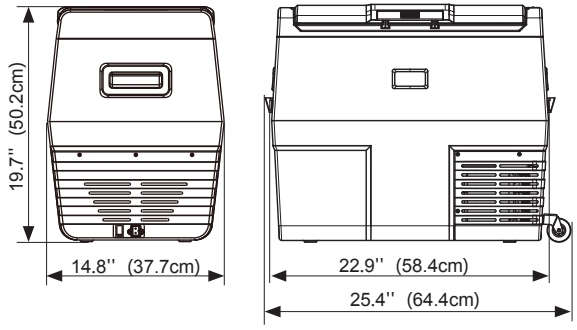

INSTALLATION

TC series refrigerators are equipped with hand straps (**TC20 only has holes on one side for strap installation)** and pulleys to facilitate your travel.

1、Installation of handle belt assembly: install buckle(s) for handle fixing ① in prepared screw holes with screws.

2、Use the handle belt(s) ② to pass through holes on the buckle(s), and adjust the length.

3、Wheel assembly installation: install wheels ③ to their preset positions near the compressor with screws.

step 1

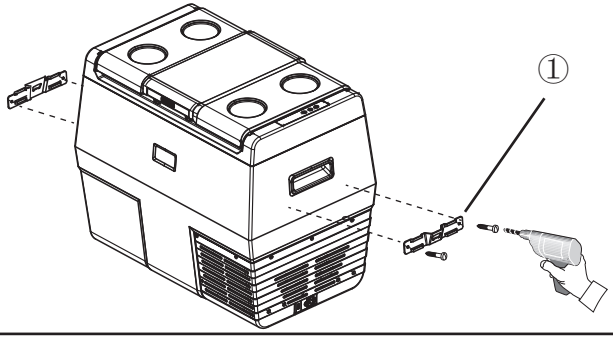

step 2

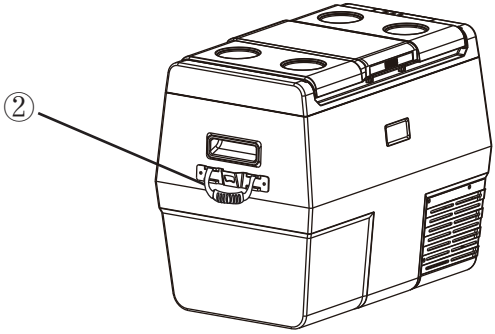

step 3

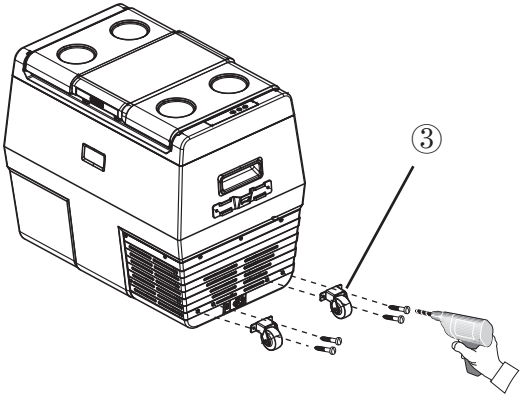

HOW TO USE THE REFRIGERATOR

1.Connecting with 12V or 24V
Connect the feeding cable to a direct current 24V DC power source.

- Make sure the polarity is right.
- If connected to an existing cigarette plug, please carefully check up that power supply is sufficient.
- If the supplied power cable is not used, please see the table containing the information related to the cable section:
  The Fridge/Freezer is designed to operate on DC voltage inputs.

DC input	12V or 24V
DC cable	2.5m,16AWG

2.Connecting with 110-240V

- EA20/35 could connect with 110-240V via AC adapter.
- The coolers have an integrated multi-voltage power supply with priority circuit for connecting to an AC voltage source of 110-240V. The priority circuit automatically switches the cooler to mains operation, if the device is connected to a 120/240V AC mains, even if the 12/24V connection cable is still attached. In order to protect the freezer and cigarette socket, we suggest use with one power supply.

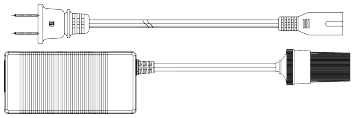

OPERATION

1.ON/OFF
In the standby status, short press " ⏻ " to turn on the fridge. Short press " ⏻ " for 3 seconds, to power off.

2.Temperature Setting
When the appliance on, short press "+" button can up and down the temperature, highest to 20°C(68°F), lowest to -20°C(-4°F).

- Long press "+" or "-" , can adjust the temperature at 3 degree per seconds.

3.Conversion between Celsius and Fahrenheit / Battery protection mode
In the standby status, long press "+" and "-" button at the same time for 3 seconds can enter Advanced Setting, When the Advanced setting comes up, short press "ON/OFF" button to cycle into pro mode (battery protection), or F/C function (Celsius Fahrenheit switch mode)

- With the F/C function, short press "+" or "-" can convert centigrade to Fahrenheit. F refer to Fahrenheit, C refer to centigrade.
- With battery protection mode, short press "+" or "-" can set the selected the parameters.

Battery protection Level

Battery protection (SWITCH POSITION)	Cut-out 12V	Cut-in 12V	Cut-out 24V	Cut-in 24V
LOW	9.6	10.9	21.3	22.7
MED	10.4	11.7	22.8	24.2
HIGH	11.1	12.4	24.3	25.7

CUT IN / CUT OUT

- Your fridge has built in battery protection and needs a minimum 10.9 V to start and 9.6 V to continue operating.
- During operation a load is placed on the power supply and voltage can drop by as much as 2 V, especially if the wiring in insufficient (less than 6mm direct to battery) or if there is a loose connection somewhere.
- If this occurs when you try and start your SetPower and the power supply drops under 10.9 V it will not start. If this occurs when your SetPower is running and the power supply drops below 9.6 V it will stop.

COMMON 12V POWER SUPPLY ISSUES

Wiring

Often the standard wiring from the car battery to the 12V outlet is too small. A minimum 6mm automotive wiring should be used and the earth should be wired directly back to the battery.

Battery

The car battery could be old, undersized or have a dead cell causing too much voltage drop.

Connections

The 12 V plug, car 12 V socket or any of the connections between the fridge and the battery could be faulty or have come loose since installation.

FILLING

Do not put hot food items into the refrigerator. Place the products in such a way as to avoid them hitting against each other or breaking because of the movement of the vehicle.
Make sure that the lid is always well closed and open it for as short a time as possible.

DEFROSTING

Defrosting is needed in regularly.
To carry out this operation, turn off the refrigerator.
Do not use sharp or cutting tools to remove the layer of frost or ice.
Do not use abrasive or solvent - based materials to clean the refrigerator.

MAINTENANCE

 Before carrying out any maintenance operation on the refrigerator, take the power cable out of its socket.

CLEANING

- Regularly clean the inside and outside of the refrigerator using only warm water and a neutral detergent.
- Subsequent to washing, rinse with clean water and dry thoroughly using a soft cloth.
- Do not use the following: special glass and mirror cleaning products, liquid, powder, or spray detergents, alcohol, ammonia or abrasive products.
- If you are not using the refrigerator, we suggest cleaning it well inside and leaving the door ajar to ventilate the interior.

SUGGESTIONS

Should the device fail to work or work badly, before referring to our after-sales service, make sure that:
a) the feeding voltage is not missing;
b) the voltage is the same as the one shown on the plate;
c) the connections and the polarities are right;
d) the airing grids are not covered over;
e) the refrigerator unit is not near any heat source
f) the fuse of the feeding line is not blown.

GENERAL SAFETY MESSAGES

 Failure to obey the following warnings could result in death or serious injury:

- ELECTRICAL SHOCK HAZARD. Do not immerse the product in water, or use it in an area that is excessively muddy.
- Do not use the cooler for any purpose other than as a mobile cooling device.

 FALL HAZARD. Do not stand on the cooler. Doing so could damage the unit or cause minor to moderate injury.

NOTICE

Failure to obey the following notices could result in property damage:

- Keep sand or dirt away from the cooling system ventilation area.
- Do not leave the cooler on the deck of a boat for an extended period. Salt water damage to the cooling system, electronics, or metal hardware could occur.

- Do not expose the cooler to extreme heat.
- Only use mild soap and water to clean the cooler.
- Do not use a DC extension cord.
- Do not use a power strip or two-way splitter.
- Do not use power cord adapters of any kind other than those provided by the manufacturer.
- Do not use ice cubes or fill the cooler with water. If ice does accumulate at the bottom of the cooler, defrost the unit and use the drain plug to drain the water.
- Do not modify the unit in any way.
- Do not place hot materials (75°F or higher) in the cooler. Allow materials to cool (50°F or less) before placing them inside the cooler.
- Do not tip or store the cooler at an angle greater than 30° for extended periods. Compressor oil contamination of the cooling system could occur.
- Allow 2–4 inches of space around the cooler at all times for proper ventilation of the cooling system.
- The cooler must be secured at all times using straps or a mounting plate, especially in mobile applications.

 The power supply cable must be replaced only by qualified technical personnel and in any case by an after sales service authorised by the Manufacturer.

SetPower is not liable in any way if you do not comply strictly with all the previsions in this manual.

This appliance is not intended for use by persons (including children) with reduced physical, sensory or mental capabilities, or lack of experience and knowledge, unless they have been given supervision or instruction concerning use of the appliance by a person responsible for their safety.
Children should be supervised to ensure that they do not play with the appliance.

FAULTS

Number of flashes	Error type
E1	The low battery protection mode take effect (the input voltage is lower than set value)
E2	Fan error/Short circuit/ Frequently start and stop
E3	Compressor motor start error (Motor block or refrigeration system pressure difference is too large.)
E4	The motor speed of the compressor is too low (the refrigeration system is overloaded, the motor cannot maintain the minimum speed of 1850r/min)
E5	Temperature too high or too low to protect the compressor control module (when the environment temperature is too high or too low, or system load is too large, causing module/ECU internal temperature 100 °C > or < - 10 °C)
E6	Thermal head fault (Open circuit or short circuit)

OUR GUARANTEE

SetPower product comes with a 2-year warranty on the compressor and 1 year warranty on all other parts for your peace of mind. In the unlikely event this product fails when used according to our user guide, we will either repair or replace it. For full warranty terms and conditions on this product, please see the user guide.

We'd welcome you contact us support@setpowerusa.com if you have any question about the product.

Quality Service Guarantee

This product is warranted for 2 years on the compressor and 1 year for all other parts from the date of purchase. Our goods come with guarantees that cannot be excluded under the Local Consumer Law. You are entitled to a replacement or refund for a major failure and compensation for any other reasonably foreseeable loss or damage. You are also entitled to have the goods repaired or replaced if the goods fail to be of acceptable quality and the failure does not amount to a major failure. Warranty does not cover products that have not been used in accordance with user guide or are outside the warranty terms and conditions.

Official Website:www.setpowerusa.com