AWC151
AWC301
AWC601

Wine coolers

Use and maintenance

Contents

3 Important information

6 Before first use

8 Use and controls

13 Bottle Storage

15 Care and cleaning

17 Troubleshooting

19 Installing the wine cooler

23 Reversing the door

23 Adjusting the plinth

24 Electrical information

25 How to connect an alternative plug

26 Energy efficiency information

Important

The CDA Group Ltd cannot be held responsible for injuries or losses caused by incorrect use or installation of this product. Please note that The CDA Group reserve the right to invalidate the guarantee supplied with this product following incorrect installation or misuse of the appliance or use in a commercial environment.

This appliance is not designed to be used by people (including children) with reduced physical, sensorial or mental capacity, or who lack experience or knowledge about it, unless they have had supervision or instructions on how to use the appliance by someone who is responsible for their safety.

Under no circumstances should any external covers be removed for servicing or maintenance except by suitably qualified personnel.

Do not use the appliance if the plug, the mains cord or the appliance itself is damaged. If the mains cord is damaged, you must have it replaced by the manufacturer, or an authorised service centre or similarly qualified persons in order to avoid a hazard.

Children should be supervised to ensure that they do not play with the appliance. Keep the mains cord out of the reach of children. Do not let the mains cord hang over the edge of the table or worktop on which the appliance stands.

This refrigeration appliance is intended for use as a built-in appliance.

Appliance information:

Please enter the details on the appliance rating plate below for reference, to assist Customer Care in the event of a fault with your appliance and to register your appliance for guarantee purposes.

Appliance model	
Serial number	

EU Declarations of Conformity:

This appliance has been designed, constructed and marketed in compliance with safety requirements of EU Directive 2014/35/EU (Low voltage) and requirements of Directive 2014/30/EU (EMC).

IMPORTANT INFORMATION FOR CORRECT DISPOSAL OF THE PRODUCT IN ACCORDANCE WITH EC DIRECTIVE 2012/19/EU.

Please render the appliance unusable before disposal. This includes removing the plug and breaking the door fixings to prevent children being trapped inside the appliance during play, or any other risk of injury.

At the end of its working life, the product must not be disposed of as urban waste. It must be taken to a special local authority differentiated waste collection centre or to a dealer providing this service.

Disposing of a household appliance separately avoids possible negative consequences for the environment and health deriving from inappropriate disposal and enables the constituent materials to be recovered to obtain significant savings in energy and resources. As a reminder of the need to dispose of household appliances separately, the product is marked with a crossed-out wheeled dustbin.

- Repairs carried out by unqualified persons may seriously endanger the appliance user
- Pursuant to Commission Regulation (EU) 2019/2019, The minimum availability period for spare parts necessary to repair the appliance is 7 or 10 years depending on the type and purpose of the spare part
- The list of spare parts and the ordering procedure are available on the websites of the manufacturer, importer or an authorised representative
- The minimum warranty period for the appliance offered by the manufacturer, importer or authorized representative is given in the warranty card
- The warranty shall be void if you make any independent adaptations or alterations, tamper with seals or other appliance safety devices or its parts or interfere with the appliance contrary to operating instructions

For more information about the product, please refer to the EU EPREL Product Database at https://eprel.ec.europea.eu. Alternatively you can use your mobile device to scan the QR code on the energy label or enter the product model listed on the energy label in the EPREL search engine.

Before first use

You must allow the appliance to settle for at least twenty four hours prior to switching the power on.

It is recommended that you remove all internal and external packaging and clean the interior of the appliance prior to first use. We recommend that you use a solution of bicarbonate of soda and warm water and then thoroughly dry the interior.

The appliance may have an odour to it at first use. This will disappear as the appliance cools.

Please note:

- The appliance will work continuously until it gets to the correct temperature. Continuous noise from the compressor and refrigeration system is normal
- If the appliance is switched off, you should allow five minutes before switching it on again to prevent the risk of unnecessary damage to the compressor
- The LED display may not show the selected temperature whilst the appliance first gets to the correct temperature. This is normal, and the display will be corrected automatically once the appliance has run for a few hours
- If the appliance does not have a freezer compartment () it is not suitable for freezing foodstuffs.

Use

- Only store wine in sealed containers
- Do not overload the cabinet
- Only open the door when necessary
- Do not cover the shelves with aluminium foil or anything else that will prevent air from circulating around the cabinet
- To prevent damage to the door seal, ensure the door is fully open before removing the shelves
- This is a self-defrosting appliance. The compressor will not run during the thirty minute defrost cycle
- Do not pull the shelves beyond the anti-stop position (approximately one third out) when fully loaded
- This appliance is intended to be used exclusively for the storage of wine
- In the event of a power failure, leave the door closed as much as possible to maintain the internal working temperature. Should the power failure continue for a prolonged period, you should take steps to protect the contents of the wine cooler against a rise in temperature. The wine cooler will remember the selected temperature settings and revert to these settings once the power is restored

This appliance is suitable for use in an extended temperature climate (ST) and has a normal operating ambient temperature of 16-38°C. Use of the appliance below 10°C may cause performance issues that are not indicative of a fault. Normal operation will resume once the appliance is within the specified range.

Use and controls

AWC151 & AWC301

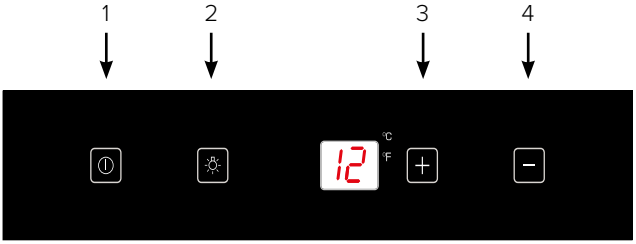

Key:

1. Power button
2. Light button
3. "+" button
4. "-" button

AWC601

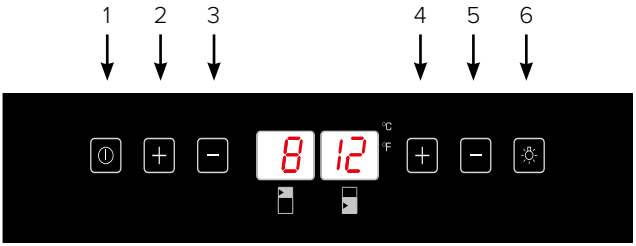

Key:

1. Power button
2. Upper zone "+" button
3. Upper zone "-" button
4. Lower zone "+" button
5. Lower zone "-" button
6. Light button

To switch the power on/off

- Press and hold the power button for one second to switch the wine cooler on
- Press and hold the power button for five seconds to switch the wine cooler off

To change the temperature

- Press the "+" or "-" buttons for the appropriate zone until the required temperature is shown on the display
- The preset temperature is 8°C/46°F for left/upper zone and 12°C/54°F for right/lower zone

Use

- To change the temperature display from Fahrenheit to Celsius, or Celsius to Fahrenheit, press and hold the light button for five seconds
- To view the set temperature, touch the appropriate "+" or "-" button at any time and the set temperature will flash in the LED display for five seconds
- The display shows the current internal temperatures when the wine cooler is on

Optimal temperature selection

Whilst wine is best stored at temperatures between 13°C and 15˚C, your wine can also be stored at drinking temperature, for red wine this is between 15°C and 17˚C, and for white wine between 12°C and 13˚C.

To use the internal light

- Press the light button to switch the light on or off.

Please note:

The temperature in the lower zone must be set either the same as or higher than the temperature in the upper zone. For optimal performance, the temperatures in the two zones should differ by at least 4˚C.

Use

Internal Humidity

The wine coolers are equipped with a humidity system to maintain optimal humidity within the wine cooler.

Fill the humidity reservoir approximately 3/4 full with water.

Place the reservoir on the runners on the top shelf as shown in fig.4. Ensure it is located correctly to prevent water spillage. Check the water level regularly and refill if required.

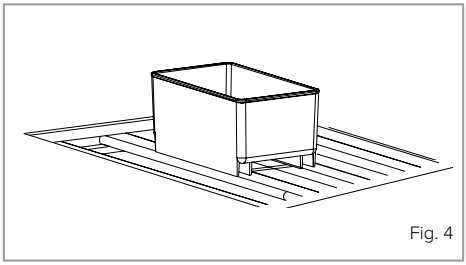

Fig. 4

Temperature display

The temperature display will show the current internal temperature.

The display flashes:

- When a different temperature is being set
- If the internal temperature is +/- 5˚ away from the set temperature

  This serves as a warning to prevent damage to the contents of the appliance should the temperature be too high

Use

Silent mode

Once the required temperature is reached, the appliance will run without the fan. The wine cooler is factory set to silent mode. To change to dynamic cooling mode, touch and hold the "-" button for approximately five seconds (left hand “-” button on AWC601). The wine cooler will beep five times to confirm dynamic cooling is on.

Dynamic cooling mode

The fan cycles on and off to circulate the air even after the required temperature is reached. This ensures consistent humidity and temperature distribution in the wine cooler, creating perfect conditions for long term storage. Using the dynamic mode increases the level of noise in operation. To change to silent mode, touch and hold the "+" button for approximately five seconds (left hand "+" button on AWC601). The wine cooler will beep three times to confirm silent mode is on.

Sabbath mode

Sabbath mode is available for the observance of certain religious holidays. This will switch off the displays, interior light and audible alarms. The cooling process will continue. To switch the Sabbath mode on, touch and hold the power and light keys simultaneously for five seconds. The indicator light will flash four times and confirm the Sabbath mode is on. Sabbath mode will switch off automatically after 48 hours, but to switch the Sabbath mode off at any time, touch and hold the power and light keys simultaneously for five seconds.

Use

Door alarm

The wine cooler is equipped with an alarm that will sound if the door is left open for more than 60 seconds. To switch off the alarm, press the power button. If the temperature has risen beyond the set temperature, the display will flash until the zone has returned to the required temperature.

Interior light

The wine cooler has two options for the interior lights. To change from one option to the other, press the light button.

- **Display mode** - This mode will leave the interior light on constantly, allowing you to see the contents of the wine cooler at a glance at any time
- **Energy saving mode** - This mode only switches on the interior light when the door is opened

Bottle storage

To achieve the most effective preservation of your wine for the longest time possible and avoiding any waste, position the products as shown in the diagrams in this section. In addition, this figure illustrates the layout of drawers, baskets and shelves, which allows the most efficient use of energy.

Optimal temperature and storage conditions will extend product shelf life and optimize electricity consumption. Optimal storage temperature should be stated on the food product packaging.

AWC151

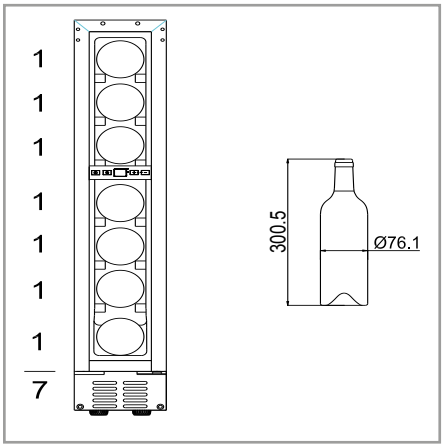

AWC301

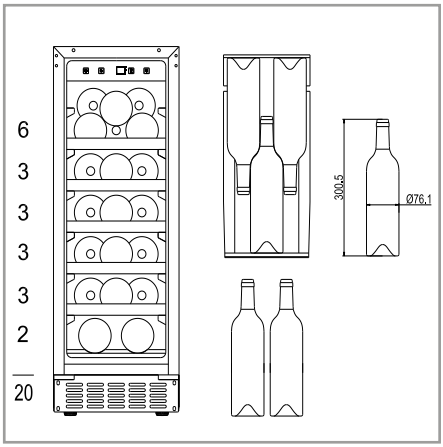

AWC601

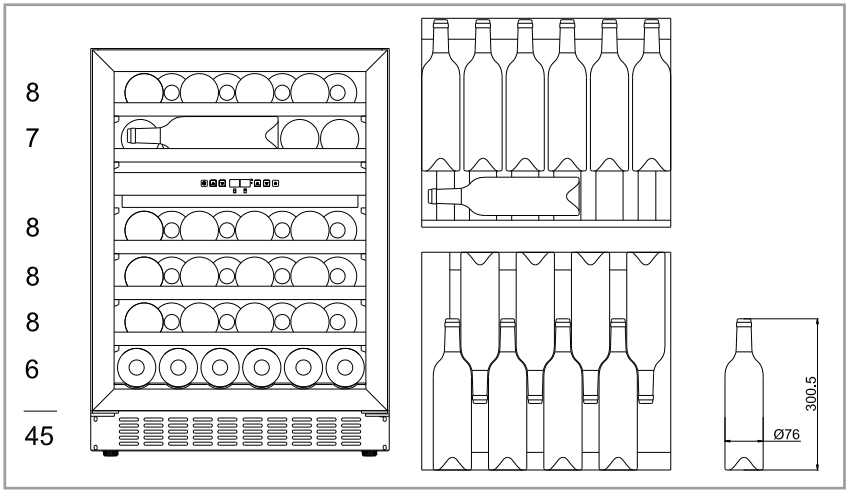

Climate Range

The information about the climate range of the appliance is provided on the rating plate. It indicates at which ambient temperature (that is room temperature in which the appliance is working) is optimal for the operation of the appliance.

Climate class		Allowable ambient temperature
SN	Extended Temperate	This refrigeration appliance is intended for use at an ambient temperature ranging between 10°C and 32°C
N	Temperate	This refrigeration appliance is intended for use at an ambient temperature ranging between 16°C and 32°C
ST	Sub Tropical	This refrigeration appliance is intended for use at an ambient temperature ranging between 16°C and 38°C
T	Tropical	This refrigeration appliance is intended for use at an ambient temperature ranging between 16°C and 43°C

Care and cleaning

IMPORTANT:

Always disconnect the appliance from the mains electrical supply before any cleaning or maintenance.

Removing the shelves

(Applicable to AWC301 & AWC601)

- To remove a shelf from the wine cooler, first remove all bottles from the shelf, then pull the shelf forwards until the groove on either side of the shelf is level with the plastic peg on either side of the cabinet (as shown in fig 5).

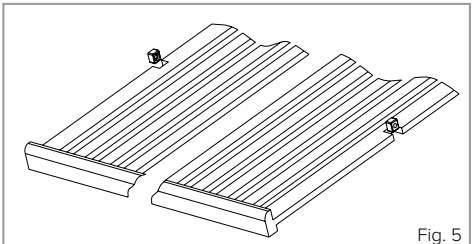

Fig. 5

  Then lift the shelf up and pull forwards
- To replace the shelves, follow the steps above in reverse order

Cleaning

- **Do not use abrasive products or detergents**. After washing, rinse and dry thoroughly
- The exterior of the appliance and the door seal should be cleaned using mild soapy water and dried thoroughly
- The interior cabinet should be cleaned using a solution of bicarbonate of soda and lukewarm water
- Clean the shelves separately by hand using soap and water. Do not put them in the dishwasher
- **Ensure that the cloth is only moist when cleaning the control panel and electrical parts, and that all water is thoroughly dried off before reconnecting the power**

Care and cleaning

- Once cleaning is complete, reconnect the mains electrical supply
- If the appliance is not to be used for prolonged periods of time, unplug and clean the appliance thoroughly. The door should be left slightly ajar to prevent the formation of odours or condensation

Temperature alarm

If the temperature rises or falls outside the set temperature range, an alarm will sound and the display will flash.

This may be because:

- The wine cooler has not yet reached the set temperature (when first switched on)
- There has been a power failure
- The wine cooler has been overloaded
- The door is not closed properly

Troubleshooting

If you have any problems with your appliance, you should check the troubleshooting guide prior to calling Amica Customer Care to prevent unnecessary service calls and potential cost.

If the appliance is not working, check

- There is power to the appliance
- The house fuses or circuit breakers are intact and the fuse in the plug has not blown
- The plug socket is functioning correctly. To check this, plug another electrical appliance in to see if the socket is working
- The ambient temperature is between 16°C to 32°C

The appliance is working, but not very well, check

- The appliance is not overloaded
- The thermostat is set to an appropriate temperature
- The door is closing properly
- The door gasket is sealing properly
- There is enough ventilation at the side and rear walls
- The ambient temperature is between 16°C to 32°C

The appliance is noisy, check

- The appliance is level and stable
- The cooling gas will make some noise, even when the compressor is not running
- During operation, it is normal for the fan to run, even when the compressor is not running

Troubleshooting

The light does not work, check

- There is power to the appliance
- The house fuses or circuit breakers are intact and the fuse in the plug has not blown
- The light button is not set to off

Please note:

The LED lighting cannot be replaced without a service call. If the light fails, contact Amica Customer Care.

The door will not close properly, check

- The appliance is level and stable
- If the door has been removed, it may not have been correctly refitted
- The door seal is dirty
- The shelves are not positioned correctly

The display shows “E1” or “E2”

- The temperature sensor has failed. Please contact Amica Customer Care

Installing the wine cooler

This appliance is intended to be installed in a space between two units.

The minimum space required is:

AWC151 – 150mm W x 555mm D x 825mm H

AWC301 – 300mm W x 580mm D x 825mm H

AWC601 – 600mm W x 580mm D x 825mm H

Please note: When the product is installed, there should be a small ventilation gap between the top of the unit and the underside of the worktop (6 mm or ¼")

These products should not be installed:

- In direct sunlight
- Adjacent to a heat source (oven or radiator)
- Below a hob unit

Where a continuous plinth is to be used, it is necessary to cut a section out so that the ventilation slots at the front of the appliance are not obstructed in any way as per fig 6.

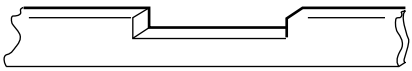

fig. 6

Installing the wine cooler

This appliance is designed to fit under worktops between 820 – 890mm in height, using the adjustable plinth plate to ensure that the feet are concealed from view.

IMPORTANT: Failure to follow the instructions regarding installation and ventilation may invalidate the warranty supplied with your appliance.

Installing the handle

IMPORTANT: Do not overtighten the screws, and do not use power tools to install the handle.

1. Remove the door gasket (2) on the side you wish to install the handle - you can see two designated holes for handle installation.
2. Install the handle (4) tightly as shown above with two screws (1) and flat washers (3) provided.
3. Replace the door gasket.

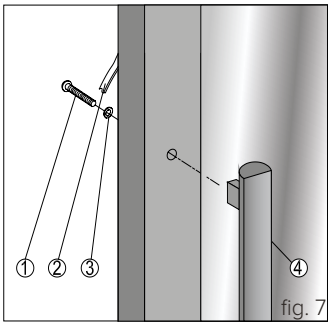

fig. 7

IMPORTANT: Take care when installing the handle not to damage the door. Any damage caused may not be covered by the warranty supplied with your appliance.

Reversing the door

You will need the help of another person, during this process, to lean the wine cooler back and support it.

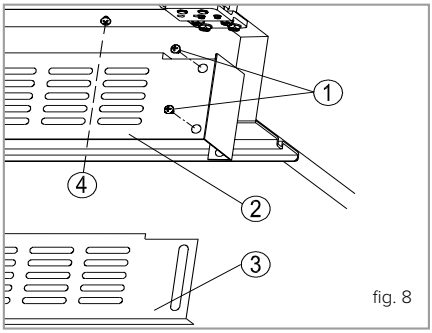

fig. 8

1. Remove the rear ventilation trim (3) by removing screws (1) from both sides and sliding the trim out from below. Then remove the front ventilation trim (2) by removing screws (4) from each side as shown in fig. 8. These screws (4) are located above and behind the front ventilation trim (2) and their location is indicated by the dotted line in fig. 8.

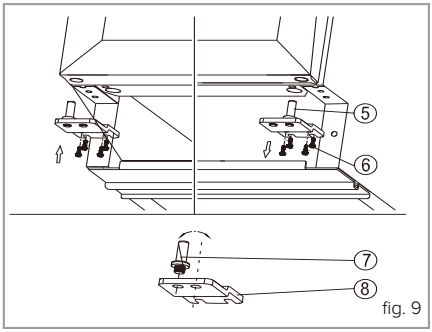

fig. 9

2. Remove the remaining plinth trim supports (Fig. 11) by removing the screws marked S1 through the holes marked H1 and the screws marked S2 through the gaps marked as H2.

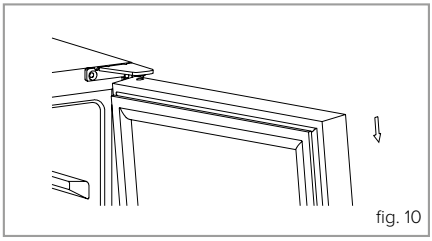
fig. 10

3. Remove the lower hinge (5) by removing the four screws (6) as shown in fig. 9. Support the door as you do to prevent damage.

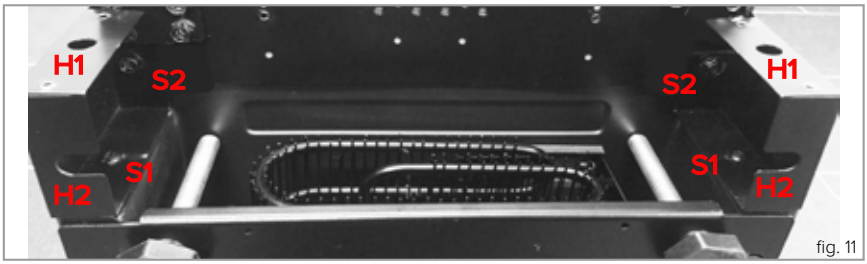

fig. 11

4. Gently lower the door away from the top hinge and place on a padded surface to avoid the risk of damage as shown in fig. 10.

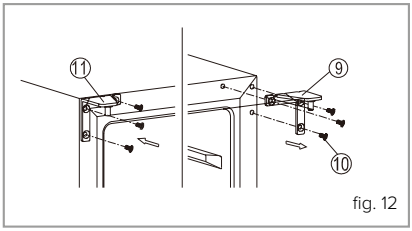

fig. 12

5. Remove the upper hinge (9) as shown in fig. 12.
6. Unscrew and transfer pin (7) from the lower hinge plate to the opposite side as shown in fig. 9.
7. Pop out the cover caps on the opposite side and use them to cover the screw holes on the original side.
8. Fit the alternative upper hinge on the opposite side.
9. Rotate the door 180° and relocate it on the top hinge.
10. Refit the modified lower hinge into the door and secure it to the appliance body using the screws removed in step 1.
11. Refit all ventilation trims.

IMPORTANT:

Allow the wine cooler to settle for 24 hours before switching it on.

Keep the spare hinge plate(s) to be able to reverse the door back again.

Door reversal diagram index

1 - Ventilation trim adjustment screws
2 - Front ventilation trim
3 - Rear ventilation trim
4 - Front ventilation trim securing screw
5 - Lower hinge
6 - Lower hinge fixing screw
7 - Main hinge pin
8 - Hinge bracket
9 - Upper hinge
10 - Upper hinge fixing screw
11 - Replacement top hinge

Adjusting the plinth

The pre-fitted plinth for this appliance comes with an adjustable lower section that is initially seated behind the upper section. The process for adjusting the plinth trim is simple and is achieved by following the image and steps below.

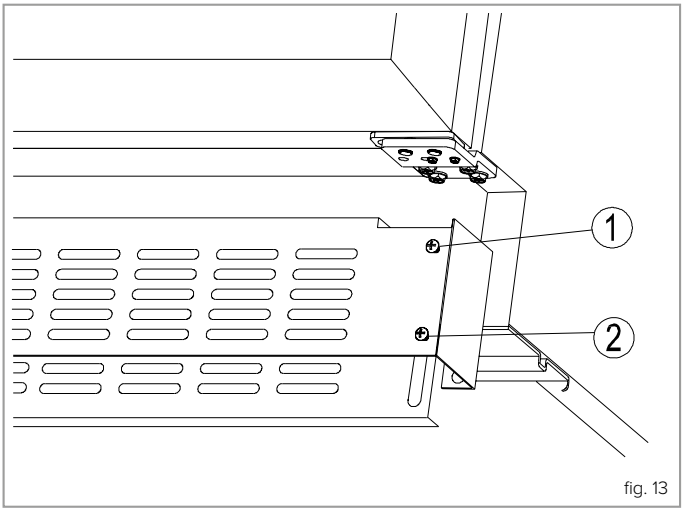

fig. 13

1. Remove the screws (1) from both the top left and top right hand sides
2. Loosen or remove the screws (2) from the bottom left and bottom right hand sides. **Failure to sufficiently loosen the bottom screws may cause damage to the lower trim when adjusting it**
3. Carefully guide the lower trim down until the desired height is achieved
4. Reinsert the screws (1) and tighten them, then tighten or reinsert screws (2)

Electrical information

Warning! This appliance must be earthed.

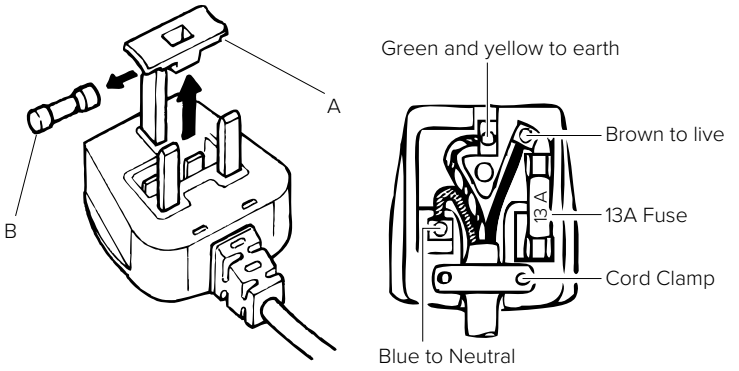

fig. 14

The mains lead of this appliance has been fitted with a BS 1363A 13 amp fused plug. To change a fuse in this type of plug, follow the steps below:

1. Remove the fuse cover and fuse.
2. Fit replacement 13A fuse, ASTA approved to BS 1362 type, into the fuse cover.
3. Replace fuse cover.

Important: Do not use the appliance without the fuse cover in position.

How to connect an alternative plug

If the fitted plug is not suitable for your socket outlet, then it should be cut off and disposed of safely to avoid possible shock hazard. A suitable alternative plug of at least 13 Amp rating to BS 1363 should be used.

As the colours of the wires in the mains lead of this appliance may not correspond with the coloured markings identifying the terminals in your plug, proceed as follows:-

- The wire which is coloured GREEN and YELLOW must be connected to the terminal which is marked with the letter (E) or by the Earth symbol ⏚ or coloured GREEN and YELLOW.
- The wire which is coloured BLUE must be connected to the terminal which is marked with the letter (N) or coloured BLACK.
- The wire which is coloured BROWN must be connected to the terminal which is marked with the letter (L) or coloured RED.

If in doubt regarding the electrical connection of this appliance, consult a qualified electrician. Do not shorten the supply cable, the appliance may require removing for servicing.

N.B. Ensure that the plug socket is situated in an easily accessible place.

Energy Efficiency Information					
Attribute	**Symbol**	**Value**			**Units**
Model identification		AWC151	AWC301	AWC601	
Category of the household refrigerating appliance		2			
Voltage / Frequency		220-240 / 50			V / Hz
Dimensions (W x D x H)		14.8 x 57 x 82	29.5 x 61.5 x 82	59.5 x 61.5 x 82	cm
Weight		18	25	44	kg
Annual Energy Consumption	AEc	185	138	180	kWh/year
	The energy consumption is based on standard test results for 24 hours. Actual energy consumption will depend on how the appliance is used and where it is located.				
Storage Volume		19	57	125	L
Coldest Storage Temperature		5			°C
Defrosting Type		Automatic			
Climatic Class	Climatic Class: ST [climatic class] This appliance is intended to be used at an ambient temperature between 16 [lowest temperature] °C and 32 [highest temperature] °C				
Airborne Acoustic Noise Emissions	pW	43	43	43	dB(A)
Installation Type	Built-under				

E & O E. All instructions, dimensions and illustrations are provided for guidance only. Amica reserve the right to change specifications without prior notice.

Notes

Amica
The CDA Group Building
Harby Road
Langar
Nottinghamshire
NG13 9HY

Sales Department
Phone: 01949 862010

Amica Customer Care
Phone: 01949 862012
Email: customer.care@cda.eu



©2020 CDA Group Ltd