Use & Care Manual

Top Mount

Refrigerator

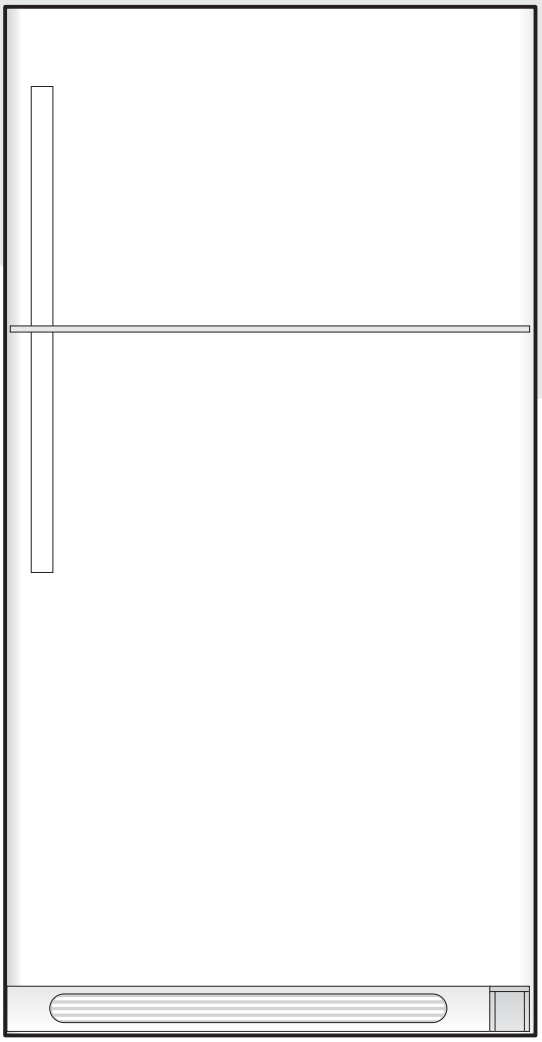

Welcome 2

Safety Instructions 3

Installation -- Includes Connecting Optional Ice Maker To Water Supply ..... 4 - 5

Door Removal & Reversal ..... 6 - 9

Features at a Glance 9

Temperature Controls ..... 9 - 10

Looking Inside ..... 10 - 12

Ice Service ..... 12 - 13

Food Storage & Energy Saving Tips 13

Normal Operating Sounds 14

Care & Cleaning ..... 15 - 16

Warranty 17

Before You Call 18

Español 19

READ AND SAVE THESE INSTRUCTIONS

P/N 241694400 (0106)

WELCOME & CONGRATULATIONS

Congratulations on your purchase of a new refrigerator! We here at **Electrolux Home Products, Inc.** are very proud of our product and we are completly committed to providing you with the best service possible. Your satisfaction is our #1 priority.

Please read this Use & Care Manual very carefully. It contains valuable information on how to properly maintain your new refrigerator.

We know you'll enjoy your new refrigerator and **Thank You** for choosing our product. We hope you consider us for future purchases.

PLEASE READ AND SAVE THESE INSTRUCTIONS

This Use & Care Manual provides specific operating instructions for your model. Use your refrigerator only as instructed in this manual. These instructions are not meant to cover every possible condition and situation that may occur. Common sense and caution must be practiced when installing, operating and maintaining any appliance.

Please record your model and serial numbers below for future reference. This information is found on your serial plate located inside the refrigerator compartment.

NOTE

Use only soap and water to clean serial plate.

Model Number: _____

Serial Number: _____

Purchase Date: _____

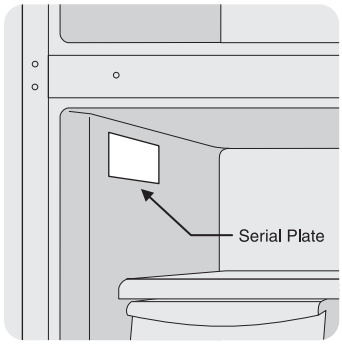

Questions?

1-800-944-9044

(United States)

1-800-265-8352

(Canada)

Extend Your Warranty Protection With An *Extended Service Contract*

CALL 1-800-944-9044 To Enjoy These Benefits:

- **Total freedom from repair bills** so unexpected repairs won't upset your budget.
- **Fast, convenient toll-free service** is just a phone call away.
- **Top-quality repairs** by factory-trained experts.
- **Quick access to genuine replacement parts** so you can rest assured your refrigerator is repaired with the proper components.

Please attach sales receipt here for future reference.

PLEASE COMPLETE AND MAIL IN THE *PRODUCT REGISTRATION CARD* INCLUDED WITH YOUR REFRIGERATOR.

IMPORTANT SAFETY INSTRUCTIONS

WARNING

Please Read All Instructions Before Using This Refrigerator.

FOR YOUR SAFETY

- Do not store or use gasoline, or other flammable liquids in the vicinity of this or any other appliance. Read product labels for warnings regarding flammability and other hazards.
- Do not operate the refrigerator in the presense of explosive fumes.
- Avoid contact with any moving parts of automatic ice maker.
- Remove all staples from the carton. Staples can cause severe cuts, and also destroy finishes if they come in contact with other appliances or furniture.

CHILD SAFETY

Destroy or recycle the carton, plastic bags, and any exterior wrapping material immediately after the refrigerator is unpacked. Children should **NEVER** use these items to play. Cartons covered with rugs, bedspreads, plastic sheets or stretch wrap may become airtight chambers, and can quickly cause suffocation.

WARNING

These Guidelines Must Be Followed To Ensure That Safety Mechanisms In This Refrigerator Will Operate Properly.

ELECTRICAL INFORMATION

- **The refrigerator must be plugged into its own dedicated 115 Volt, 60 Hz., AC only electric outlet.** The power cord of the appliance is equipped with a three-prong grounding plug for your protection against electrical shock hazards. It must be plugged directly into a properly grounded three-prong receptacle. The receptacle must be installed in accordance with local codes and ordinances. Consult a qualified electrician. **Do not use an extension cord or adapter plug.**
- If the power cord is damaged, it should be replaced by the manufacturer, service technician or a qualified person to prevent any risk.
- Never unplug the refrigerator by pulling on the power cord. Always grip the plug firmly, and pull straight out from the receptacle to prevent damaging the power cord.
- Unplug the refrigerator before cleaning and before replacing a light bulb to avoid electrical shock.
- Performance may be affected if the voltage varies by 10% or more. Operating the refrigerator with insufficient power can damage the compressor. Such damage is not covered under your warranty.
- Do not plug the unit into an outlet controlled by a wall switch or pull cord to prevent the refrigerator from being turned off accidentally.
- Avoid connecting refrigerator to a Ground Fault Interruptor (GFI) circuit.

PROPER DISPOSAL OF YOUR REFRIGERATOR OR FREEZER

Risk of child entrapment

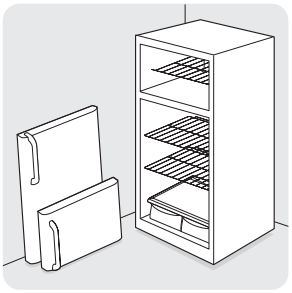

Child entrapment and suffocation are not problems of the past. Junked or abondoned refrigerators or freezers are still dangerous – even if they will sit for "just a few days." If you are getting rid of your old refrigerator or freezer, please follow the instructions below to help prevent accidents.

Before you throw away your old refrigerator/ freezer:

- Remove doors.
- Leave shelves in place so children may not easily climb inside.
- Have refrigerant removed by a qualified service technician.

IMPORTANT

Turning the Freezer and Fresh Food Controls to "0" turns off the compressor and prevents your refrigerator from cooling, but does not disconnect the power to the light bulb and other electrical components. To turn off power to your refrigerator you must unplug the power cord from the wall outlet.

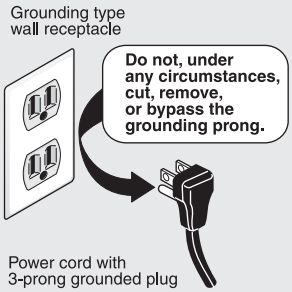

INSTALLATION

This Use & Care Manual provides specific operating instructions for your model. Use the refrigerator only as instructed in this Use & Care Manual. **Before starting the refrigerator, follow these important first steps.**

LOCATION

- Choose a place that is near a grounded electrical outlet. **Do Not** use an extension cord or an adapter plug.
- If possible, place the refrigerator out of direct sunlight and away from the range, dishwasher or other heat sources.
- The refrigerator must be installed on a floor that is level and strong enough to support a fully loaded refrigerator.
- Consider water supply availability for models equipped with an automatic ice maker.

INSTALLATION

CAUTION

Do Not install the refrigerator where the temperature will drop below 55°F (13°C) or rise above 110°F (43°C). The compressor will not be able to maintain proper temperatures inside the refrigerator.

Do Not block the toe grille on the lower front of your refrigerator. Sufficient air circulation is essential for the proper operation of your refrigerator.

Installation Clearances

- Allow the following clearances for ease of installation, proper air circulation, and plumbing and electrical connections:

Sides & Top	3/8”
Back	1”

NOTE

If you see black coils/tubing on the back of your refrigerator (air-cooled condenser) leave 3” clearance at top of refrigerator.

DOOR OPENING

NOTE

If your refrigerator is placed with the door hinge side against a wall, you may have to allow additional space so the door can be opened wider.

Your refrigerator should be positioned to allow easy access to a counter when removing food. To make this possible, the direction in which the doors open can be reversed. See *Door Removal & Reversal Instructions*.

LEVELING

All four corners of your refrigerator must rest firmly on a solid floor. Your refrigerator is equipped with adjustable front rollers or front leveling screws to help level your unit.

To Level Your Refrigerator:

1. Remove toe grille.
2. Use flat-blade screwdriver or 3/8” socket wrench to adjust front rollers. Use adjustable wrench to adjust leveling screws.

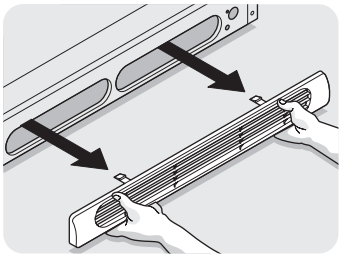

NOTE

Raise the front of the refrigerator enough so the doors close freely when opened halfway. The refrigerator should slope ¼” to ½” from front to back. Then level the refrigerator from side to side.

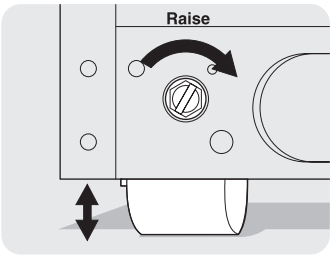

Adjustable Front Roller (some models)

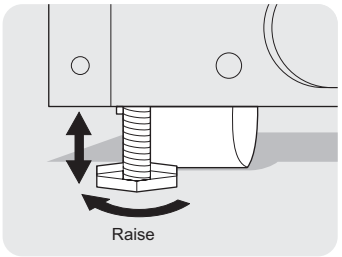

Stationary Front Roller with Leveling Screw (some models)

INSTALLATION - CONNECTING ICE MAKER TO WATER SUPPLY

WARNING

To avoid electric shock, which can cause death or severe personal injury, disconnect the refrigerator from electrical power before connecting a water supply line to the refrigerator.

CAUTION

To Avoid Property Damage:

- **Copper tubing is recommended for the water supply line. Water supply tubing made of ¼" plastic is not recommended since it greatly increases the potential for water leaks. Manufacturer will not be responsible for any damage if plastic tubing is used for supply line.**
- **DO NOT install water supply tubing in areas where temperatures fall below freezing.**
- **Chemicals from a malfunctioning softener can damage the ice maker. If the ice maker is connected to soft water, ensure that the softener is maintained and working properly.**

IMPORTANT

Ensure that your water supply line connections comply with all local plumbing codes.

Before Installing The Water Supply Line, You Will Need

- **Basic Tools:** adjustable wrench, flat-blade screwdriver, and Phillips™ screwdriver
- Access to a household cold water line with water pressure between 30 and 100 psi.
- A water supply line made of ¼ inch (6.4 mm) OD, copper tubing. To determine the length of copper tubing needed, you will need to measure the distance from the ice maker inlet valve at the back of the refrigerator to your cold water pipe. Then add approximately 7 feet (2.1 meters), so the refrigerator can be moved out for cleaning (as shown).
- A shutoff valve to connect the water supply line to your household water system. **DO NOT** use a self-piercing type shutoff valve.
- A compression nut and ferrule (sleeve) for connecting the water supply line to the ice maker inlet valve.

NOTE

Water line kit number 5303917950, available from your appliance dealer at additional cost, contains 25 feet (7.6 meters) of ¼ inch OD copper tubing, a saddle type shutoff valve (nonpiercing), (2) ¼ inch brass compression nuts, (2) ferrules/sleeves, and instructions for installing a water supply line.

To Connect Water Supply Line To Ice Maker Inlet Valve

1. Disconnect refrigerator from electric power source.
2. Place end of water supply line into sink or bucket. Turn ON water supply and flush supply line until water is clear. Turn OFF water supply at shutoff valve.
3. Unscrew plastic cap from water valve inlet and discard cap.
4. Slide brass compression nut, then ferrule (sleeve) onto water supply line, as shown.
5. Push water supply line into water valve inlet as far as it will go (¼ inch). Slide ferrule (sleeve) into valve inlet and finger tighten compression nut onto valve. Tighten another half turn with a wrench; **DO NOT** over tighten.
6. With steel clamp and screw, secure water supply line to rear panel of refrigerator as shown.
7. Coil excess water supply line (about 2½ turns) behind refrigerator as shown and arrange coils so they do not vibrate or wear against any other surface.
8. Turn ON water supply at shutoff valve and tighten any connections that leak.
9. Reconnect refrigerator to electrical power source.
10. To turn ice maker on, lower wire signal arm (see ice maker front cover for ON/OFF position of arm).

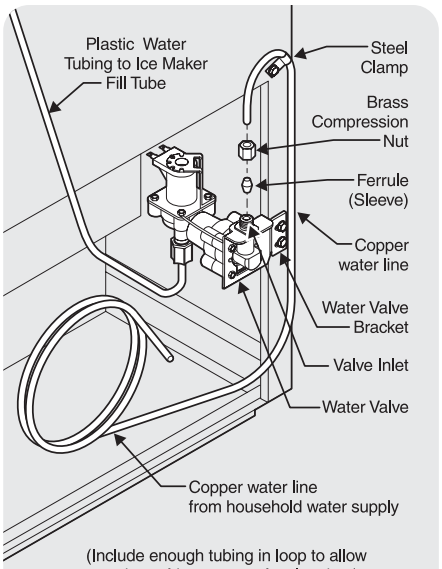

(Include enough tubing in loop to allow moving refrigerator out for cleaning.)

IMPORTANT

It takes approximately 24 hours for the ice maker to begin producing ice. Air in new plumbing lines may cause ice maker to cycle two or three times before making a full tray of ice. New plumbing may cause ice to be discolored or have poor flavor. Discard ice made during the first 24 hours.

DOOR REMOVAL / REVERSAL INSTRUCTIONS

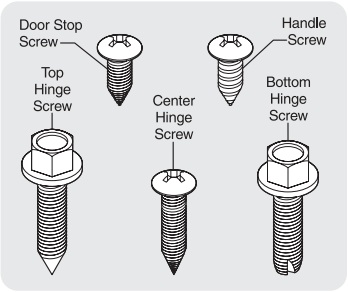

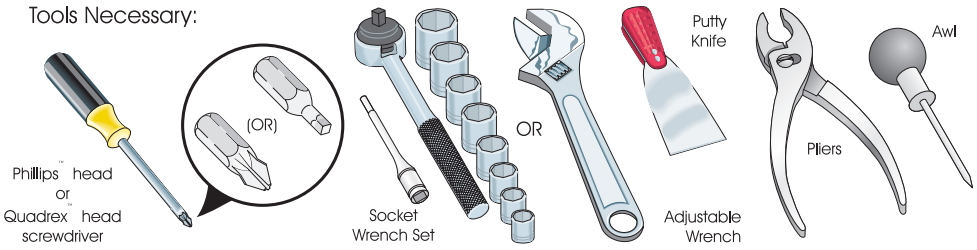

DOOR REMOVAL AND REVERSAL INSTRUCTIONS:

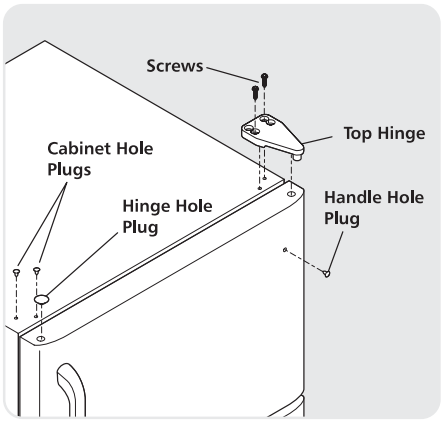

NOTE

If you have stainless steel doors -- go to the *Removing Stainless Steel Doors and Handles* Section on page 8.

The direction in which your refrigerator doors open (door swing) can be reversed, from left to right or right to left, by moving the door hinges from one side to the other. Reversing the door swing should be performed by a qualified person.

IMPORTANT

Before you begin, turn the refrigerator temperature control to “0” and remove the electrical power cord from the wall outlet. Remove any food from door shelves.

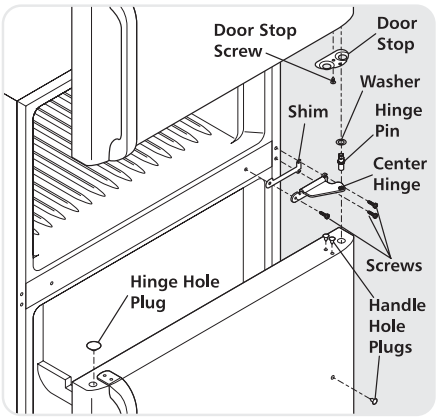

1. Remove toe grille.
2. Remove top hinge with 3/8” hex driver and lift freezer door off of center hinge pin. Set door aside.
3. Unscrew center hinge pin using adjustable wrench and save for reassembly. Ensure plastic washer stays on hinge pin.
4. Lift refrigerator door off of bottom hinge and set aside.
5. Remove center hinge and shim by removing inside screw and loosening two outside screws enough to allow hinge and shim to slide out. Tighten screws.
6. Loosen two outside screws on opposite side of refrigerator, remove inside screw and install center hinge.
7. Remove two screws on bottom hinge with 3/8” socket wrench.
8. Install bottom hinge on opposite side with the two screws removed from step 7.
9. Unscrew bottom hinge pin using adjustable wrench. Move hinge pin to other hole in hinge and tighten with adjustable wrench.
10. Reverse door handles (see instructions on next page).
11. Move freezer and refrigerator door stops to opposite side. Before starting screws, use an awl to puncture the foam.
12. Position refrigerator door onto bottom hinge pin and screw center hinge pin through center hinge into top of door. Close refrigerator door to help align hinge hole.
13. Tighten center hinge pin with adjustable wrench.
14. Remove cabinet and hinge hole plugs and move to opposite side.
15. Lower freezer door onto center hinge pin.
16. Close freezer door. Have an assistant lift up on opposite side of door while tightening screws to install top hinge.
17. Replace toe grille.
18. Plug in electrical power cord and turn refrigerator temperature control to center position. Adjust setting as necessary.

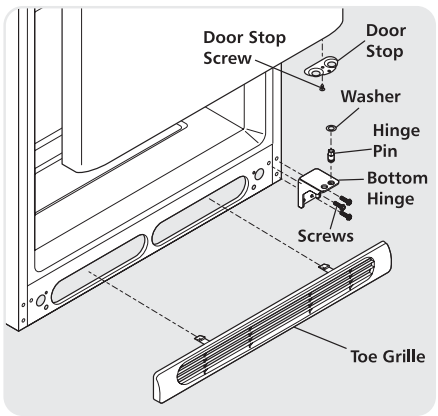

DOOR REMOVAL / REVERSAL INSTRUCTIONS

NOTE

Some models have “pocket” handles, which are recessed into the sides of the door. On these models, only the hinges will need to be reversed.

TO REMOVE FREEZER HANDLE:

(Handles may be easier to reverse while doors are off.)

1. Remove two screws attaching handle to bottom of freezer door.
2. Remove short trim piece by sliding trim straight up and off of handle bracket.
3. Remove screw attaching top of handle to door.
4. **Magnetic Nameplate Models:** Gently pry magnetic nameplate frame from door. Remove nameplate from its frame, turn frame upside down and install in old handle holes. Insert magnetic nameplate into frame.

   Self-Adhesive Nameplate Models: Gently peel off nameplate from door and reapply over old handle holes.

TO ATTACH FREEZER HANDLE:

1. Reinstall handle on opposite side, using same hole as nameplate.
2. Attach handle to bottom of door.
3. Slide trim piece straight down onto handle bracket.

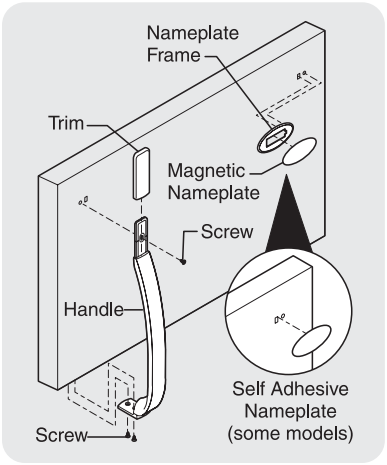

TO REMOVE FREEZER HANDLE:

(Handles may be easier to reverse while doors are off.)

1. Remove two screws attaching handle to bottom of freezer door.
2. Remove button plug using edge of putty knife.
3. Remove screw on side of freezer door and remove handle.

TO ATTACH FREEZER HANDLE:

1. Secure side of handle to door and replace button plug.
2. Secure handle to bottom of door.

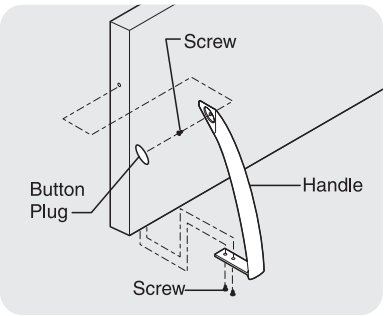

NOTE

To remove freezer handle, refer to figure 3 on page 9.

TO REMOVE FREEZER HANDLE:

(Handles may be easier to reverse while doors are off.)

1. Remove two screws attaching handle to bottom of freezer door.
2. Swing bottom of handle away from the door and slide handle straight up and off of dovetail button.
3. Remove screw and dovetail button and install on other side, using the same holes as nameplate.
4. **Magnetic Nameplate Models:** Use putty knife to gently pry magnetic nameplate frame from door. Remove nameplate from its frame, turn frame upside down and install in old handle holes. Insert magnetic nameplate into frame.

   Self-Adhesive Nameplate Models: Use putty knife to gently peel off nameplate from door and reapply over old handle holes.

TO ATTACH FREEZER HANDLE:

1. Start with handle offset away from door. Place top of handle over dovetail button, swing handle into an upright position and pull downward, locking it into place.
2. Secure bottom of handle with two screws removed earlier.

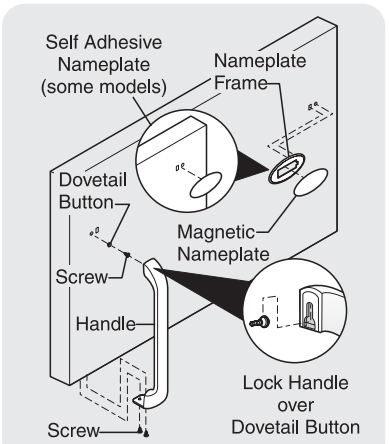

TRIM REMOVAL (FULL-LENGTH TRIM MODELS ONLY)

In some models, the refrigerator door has a full length trim piece which continues from the bottom of the handle to the bottom of the door. The top of the trim attaches to the handle bracket (Figure 1) or fits around the base of the handle (Figure 2). An adhesive “trim lock” is positioned about halfway down. The bottom of the trim is held in place by either an adhesive trim lock, or a trim lock with two prongs inserted into a hole on the face of the door.

TO REMOVE TRIM:

1. Remove trim by gently pulling trim lock areas out and away from door.
2. When trim is free from door, slide the trim straight down and away from base of handle.

NOTE

For models with short handle trim, remove by sliding trim straight down and off of handle bracket.

DOOR REMOVAL / REVERSAL INSTRUCTIONS

TO REMOVE REFRIGERATOR HANDLE:

(Handles may be easier to reverse while doors are off.)

Figure 1 Style Handles

1. Remove two screws attaching handle to top of refrigerator door.
2. Remove screw attaching bottom of handle to door.
3. Remove two hole plugs and hinge pin plug on top of door and install on opposite side. Use Phillips head screwdriver to remove plastic screw plug from front of door and install on opposite side

Figure 2 Style Handles

1. Remove two screws attaching handle to top of refrigerator door.
2. Swing top of handle away from door and slide handle down and off of dovetail button.
3. Remove screw and dovetail button and install on other side, moving hole plugs from corresponding holes to opposite side.

TO ATTACH REFRIGERATOR HANDLE:

Figure 1 Style Handles

1. Secure bottom of handle with screws.
2. Secure top of handle with screws.

Figure 2 Style Handles

1. Start with handle offset away from door. Place bottom of handle over dovetail button, swing handle into an upright position and pull upward, locking it into place.
2. Secure top of handle with screws.

TO REMOVE REFRIGERATOR HANDLE:

(Handles may be easier to reverse while doors are off.)

1. Remove two screws attaching handle to top of refrigerator door.
2. Remove button plug using edge of putty knife.
3. Remove screw on side of refrigerator door and remove handle.
4. Reverse freezer and refrigerator handles as shown in figure 3.

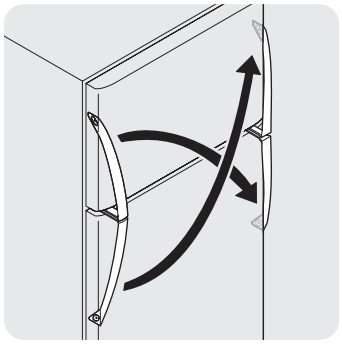

Figure 3 - Handle Reversal

TO ATTACH REFRIGERATOR HANDLE:

1. Secure side of handle to door and replace plug button.
2. Secure handle to top of door.

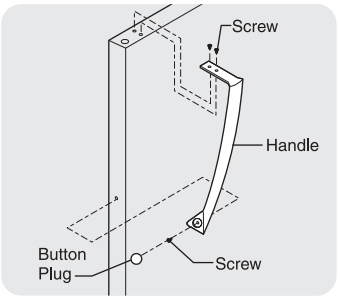

Refrigerator Door Without Trim

TO ATTACH TRIM:

1. Slide both trim locks out of trim.
2. Insert new adhesive trim locks contained in your literature pack.

NOTE

Trim lock must be removed and installed by sliding over the two donut shaped areas.

3. Install trim to handle by sliding under base of handle. Carefully align trim and press down at trim lock locations.
4. Use rubbing alcohol to remove any adhesive residue from old trim lock locations.

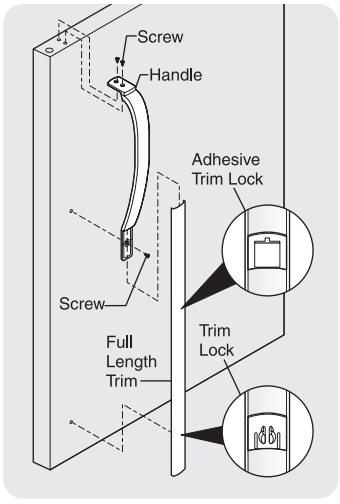

Figure 1

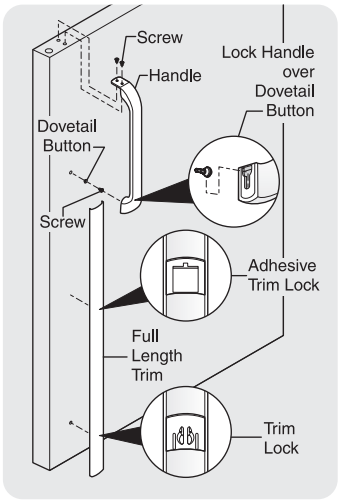

Figure 2

REMOVING STAINLESS STEEL DOORS AND HANDLES

CAUTION

Use care when using tools near surface of stainless steel doors to avoid scratching.

To Remove Doors

Stainless steel doors are not reversible. Follow these steps to remove doors.

1. Remove toe grille and top hinge cover.
2. Remove top hinge and lift freezer door off of center hinge pin. Set door aside.
3. Unscrew center hinge pin using adjustable wrench and save for reassembly. Ensure plastic washer stays on hinge pin.

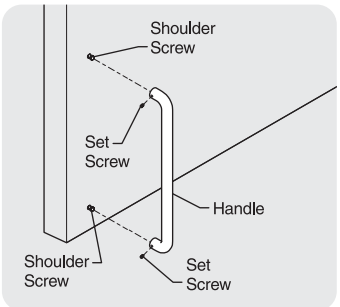

Typical Handle

4. Lift refrigerator door off of bottom hinge and set aside.
5. Remove center hinge and shim by removing inside screw and loosening two outside screws enough to allow hinge to slide out. (continued on next page)

DOOR REMOVAL / REVERSAL INSTRUCTIONS

6. Remove bottom hinge. Reinsert two outside screws in holes and tighten.
7. Reverse steps 1 - 6 to reinstall doors

To Remove Handles

1. Firmly hold freezer handle while loosening set screws with 3/32" allen wrench. Remove freezer handle.
2. Repeat step 1 for refrigerator door.

FEATURES AT A GLANCE

Features may vary according to model

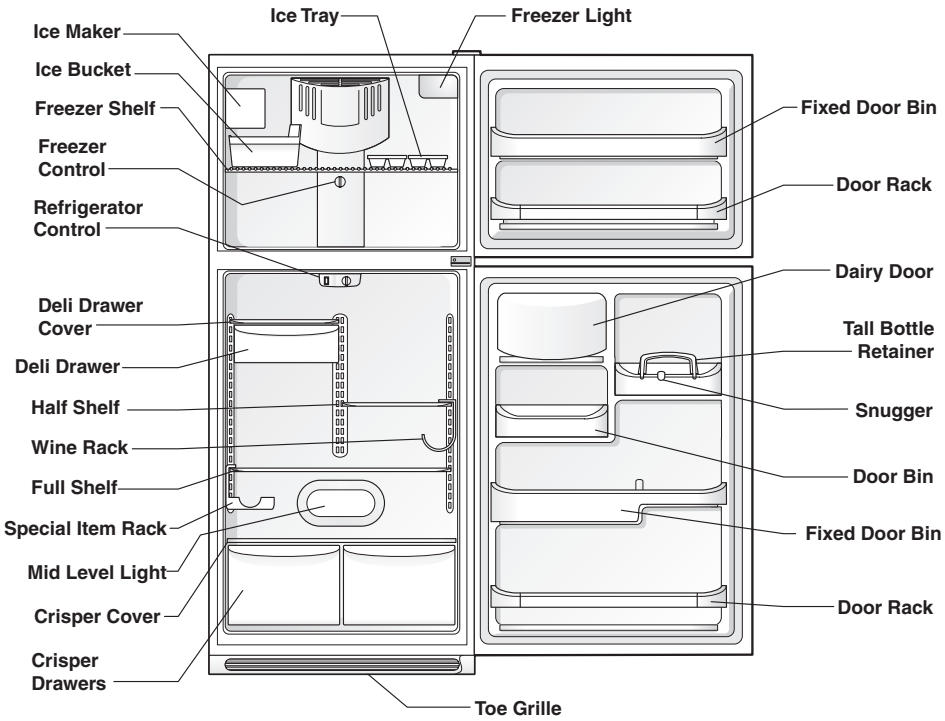

TEMPERATURE CONTROLS

COOL DOWN PERIOD

To ensure safe food storage, allow the refrigerator to operate with the doors closed for at least 8 to 12 hours before loading it with food.

REFRIGERATOR & FREEZER CONTROLS

NOTE

When changing control settings, wait 24 hours before making additional adjustments.

TEMPERATURE ADJUSTMENT

NOTE

When first turning refrigerator on, move refrigerator and freezer controls to ▼ which is the recommended initial setting. After 24 hours, adjust the controls as needed.

- **Adjust temperature gradually: move the knob in small increments, allowing the temperature to stabilize.**
- For colder temperatures, turn the knob towards **Colder**.
- For warmer temperatures, turn the knob towards **Cold**.

Turning the refrigerator control will change temperatures in both compartments. For example, if the refrigerator control is turned to a colder setting, the freezer control may have to be adjusted to a warmer setting. Turning the freezer control will change only the freezer temperature.

To maintain temperatures, a fan circulates air in the refrigerator and freezer compartments. For good circulation, do not block cold air vents with food items.

TEMPERATURE CONTROLS (CONTINUED)

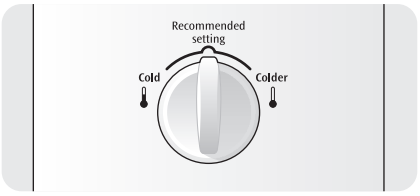

Freezer Control (some models)

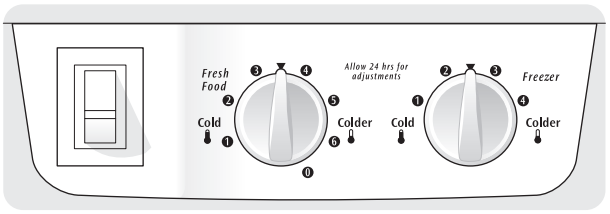

Refrigerator & Freezer Control (some models)

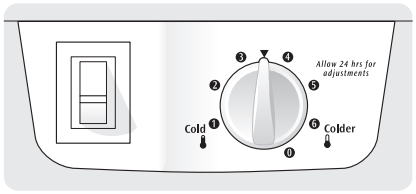

Refrigerator Control (some models)

*** IMPORTANT**

Turning the refrigerator temperature control to “0” turns off the compressor, but does not disconnect the power to the light bulb and other electrical components. To turn off power to your refrigerator, you must unplug the power cord from the wall outlet.

TEMPERATURE ADJUSTMENT GUIDE	
If Refrigerator compartment Is Too Warm	Turn Refrigerator Control Slightly Towards **Colder**.
If Refrigerator compartment Is Too Cold	Turn Refrigerator Control Slightly Towards **Cold**.
If Freezer compartment Is Too Warm	Turn Freezer Control Slightly Towards **Colder**.
If Freezer compartment Is Too Cold	Turn Freezer Control Slightly Towards **Cold**.
*** To Turn Refrigerator Off**	Turn Refrigerator Control To **0**.

LOOKING INSIDE

CAUTION

To avoid personal injury or property damage, handle tempered glass shelves carefully. Shelves may break suddenly if nicked, scratched, or exposed to sudden temperature change.

SHELF ADJUSTMENT

Refrigerator shelves are easily adjusted to suit individual needs. Before adjusting the shelves, remove all food.

To adjust sliding shelves:

1. Remove shelf by pulling forward to stop position.
2. Lift front edge up and pull out.

Replace the shelf on any pair of rails by reversing this procedure.

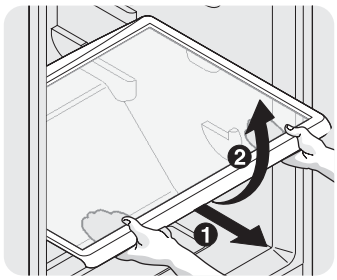

Sliding Glass Shelf

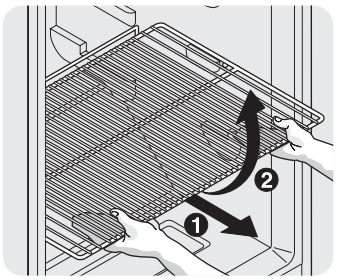

Sliding Wire Shelf

To adjust cantilever shelves:

NOTE

Cantilever shelves are supported at the back of the refrigerator. Cantilever shelves are available in either glass or wire.

1. Lift front edge up.
2. Pull shelf out.

Replace the shelf by inserting the hooks at rear of the shelf into the wall bracket. Lower the shelf into the desired slots and lock into position.

SpillSafe™ glass shelves (some models) catch and hold accidental spills. In some models, the *SpillSafe™* shelves slide out for easy access to food and for fast cleaning. The shelves slide out independently of the cantilever brackets. Just pull the front of the shelf forward. The shelf can be extended as far as the stopper will allow but it is **not** removable from the cantilever bracket.

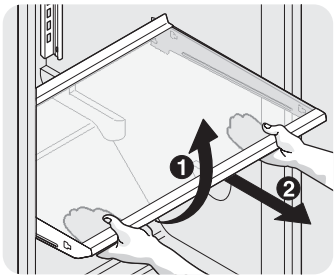

Full Width Cantilever Glass Shelf

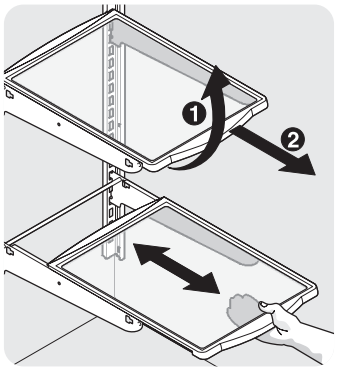

Cantilever Glass Shelf Fixed and Sliding

DOOR STORAGE

Door bins, shelves, and racks are provided for convenient storage of jars, bottles, and cans. Frequently used items can be quickly selected.

Some models have door racks or bins that can accommodate gallon-sized plastic drink containers and economy-sized jars and containers. Some racks are adjustable for maximum storage capacity.

The dairy compartment, which is warmer than the general food storage section, is intended for short term storage of cheese, spreads, or butter.

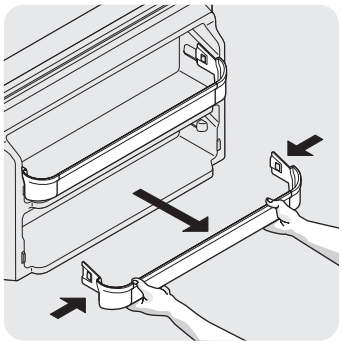

Door Rack

ADJUSTABLE DOOR BINS

Some models have adjustable door bins that can be moved to suit individual needs.

To move door bins

1. Lift bin straight up.
2. Remove bin.
3. Place bin in desired position.
4. Lower bin onto supports until locked in place.



Adjustable Door Bin

TALL BOTTLE RETAINER (SOME MODELS)

The Tall Bottle Retainer keeps tall containers in the bin from falling forward when opening or closing the refrigerator door. To install, hold the retainer at the top, and slide it over the outside wall of the bin, as shown in the diagram. The Tall Bottle Retainer works best with a Bin Snugger.

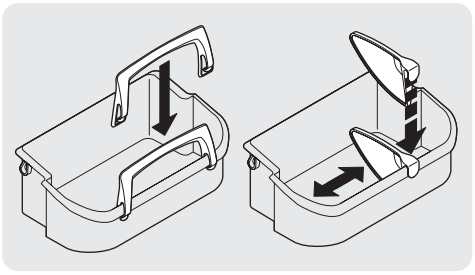

Tall Bottle Retainer (left) and Bin Snugger (right)

SPECIAL ITEM RACK (SOME MODELS)

The innovative design of the Special Item Rack allows you to store a six-pack of 12 ounce drink cans, a bottle of wine, a two-liter soft drink bottle, or a carton of eggs. The Special Item Rack mounts on the left side of your refrigerator. To install, just slide the Special Item Rack onto any shelf as shown in the drawing.

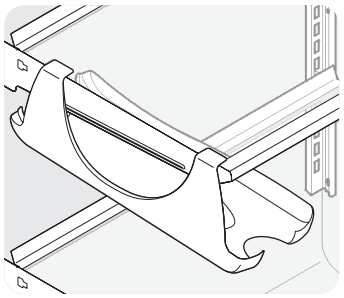

Special Item Rack

CRISPERS (SOME MODELS)

The crispers, located under the bottom refrigerator shelf, are designed for storing fruits, vegetables, and other fresh produce. Wash items in clear water and remove excess water before placing them in the crispers. Items with strong odors or high moisture content should be wrapped before storing.

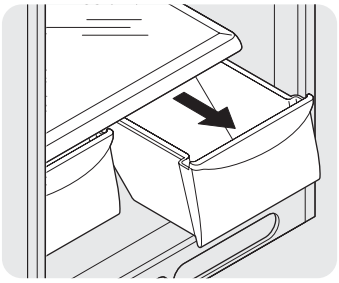

Crisper Drawer

LOOKING INSIDE (CONTINUED)

HUMIDITY CONTROL (SOME MODELS)

The Humidity Control, present on some models with crisper drawers, allows you to adjust the humidity within the crisper. This can extend the life of fresh vegetables that keep best in high humidity.

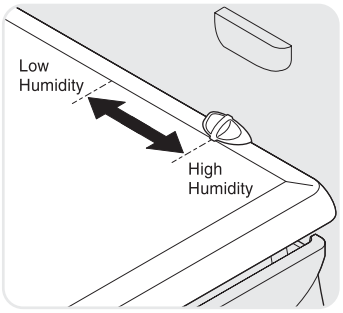

Crisper Humidity Control

NOTE

Leafy vegetables keep best when stored with the Humidity Control set on **High Humidity**, or in a drawer without a Humidity Control. This keeps incoming air to a minimum and maintains maximum moisture content.

DELI DRAWER (SOME MODELS)

Some models are equipped with a Deli Drawer for storage of luncheon meats, spreads, cheeses, and other deli items.

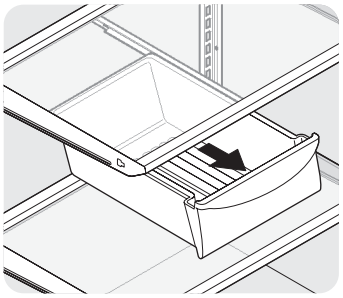

Deli Drawer

WINE RACK (SOME MODELS)

The Wine Rack stores bottles of wine, or single two-liter plastic bottles of juice or soda pop. To install, slide the Wine Rack onto the shelf with the curve facing in. To remove, slide the Wine Rack out. Install on either side of shelf.

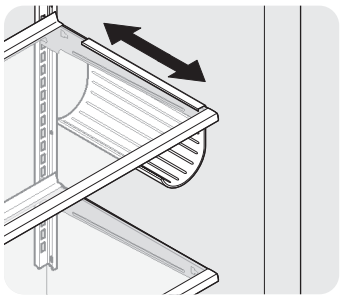

Wine Rack

ICE SERVICE

If your refrigerator has an automatic ice maker, it will provide a sufficient supply of ice for normal use. During the initial startup of your refrigerator, however, no ice will be produced during the first 24 hours of operation. Automatic ice makers are also optional accessories that may be installed in most models at any time. Call your local dealer for information.

The ice maker produces 2 to 5 pounds of ice every 24 hours depending on usage conditions. Ice is produced at a rate of 8 cubes every 80 to 160 minutes.

TURNING YOUR ICE MAKER ON

After the plumbing connections have been completed, the water supply valve must be opened. Place the ice container under the ice maker, pushing it as far back as possible. Lower the wire signal arm to its “down” or ON position. New plumbing connections may cause the first production of ice cubes to be discolored or have an odd flavor. These first cubes should be discarded until the cubes produced are free of discoloration and taste.

TURNING YOUR ICE MAKER OFF

To stop the ice maker, lift the wire signal arm until it clicks and locks in the “up” or OFF position. The ice maker also turns off automatically when the ice container is full. If your model has an adjustable freezer shelf, place the shelf in the lower position, so that the wire signal arm will hit the ice when the container is full.

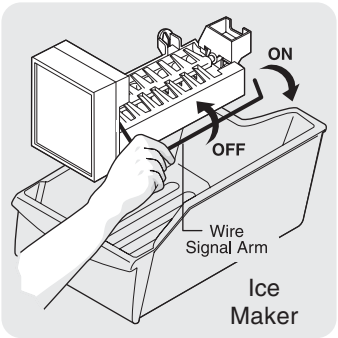

IMPORTANT

Your ice maker is shipped with the wire signal arm in the ON position. To ensure proper function of your ice maker, hook up water supply immediately or turn ice maker OFF by lifting the wire signal arm until it clicks and locks in the UP position.

CAUTION

Chemicals from a malfunctioning softener can damage the ice maker. If the ice maker is connected to soft water, ensure that the softener is maintained and working properly.

ICE MAKER TIPS

- Ice cubes stored too long may develop an odd flavor. Empty the ice container and ensure that the wire signal arm is in its “down” or ON position. The ice maker will then produce more ice.
- Occasionally shake the ice container to keep ice separated.
- Keep the wire signal arm in its “up” or OFF position until the refrigerator is connected to the water supply or whenever the water supply is turned off.
- The following sounds are normal when the ice maker is operating:
  - Motor running
  - Ice loosening from tray
  - Ice dropping into ice container
  - Running water
  - Water valve opening or closing

ICE SERVICE (CONTINUED)

- Wash the ice container in warm water with mild detergent. Rinse well and dry.
- Stop the ice maker when cleaning the freezer and during vacations.
- If the ice maker will be turned off for a long period of time, turn the water supply valve to the closed position.

NOTE

For more information on these operations, see *Normal Operating Sounds and Sights* section on page 17.

CAUTION

Do Not place the ice container in your dishwasher.

FOOD STORAGE & ENERGY SAVING IDEAS

FOOD STORAGE IDEAS

Fresh Food Storage

- The fresh food compartment should be kept between 34°F and 40° F with an optimum temperature of 37° F.
- Avoid overcrowding the refrigerator shelves. This reduces the circulation of air around the food and results in uneven cooling.

Fruits and Vegetables

- Storage in the crisper drawers traps moisture to help preserve the fruit and vegetable quality for longer time periods.

Meat

- Raw meat and poultry should be wrapped securely so leakage and contamination of other foods or surfaces does not occur.

Frozen Food Storage

- The freezer compartment should be kept at 0° F or lower.
- A freezer operates most efficiently when it is at least 2/3 full.

Packaging Foods for Freezing

- To minimize dehydration and quality deterioration, use aluminum foil, freezer wrap, freezer bags or airtight containers. Force as much air out of the packages as possible and seal them tightly. Trapped air can cause food to dry out, change color, and develop an off-flavor (freezer burn).
- Wrap fresh meats and poultry with suitable freezer wrap prior to freezing.
- Do not refreeze meat that has completely thawed.

Loading the Freezer

- Avoid adding too much warm food to the freezer at one time. This overloads the freezer, slows the rate of freezing, and can raise the temperature of frozen foods.
- Leave a space between the packages, so cold air can circulate freely, allowing food to freeze as quickly as possible.
- Avoid storing hard-to-freeze foods such as ice cream and orange juice on the freezer door shelves. These foods are best stored in the freezer interior where the temperature varies less.



ENERGY SAVING IDEAS

- Locate the refrigerator in the coolest part of the room, out of direct sunlight, and away from heating ducts or registers. Do not place the refrigerator next to heat-producing appliances such as a range, oven, or dishwasher. If this is not possible, a section of cabinetry or an added layer of insulation between the two appliances will help the refrigerator operate more efficiently.
- Level the refrigerator so that the doors close tightly.
- Refer to this Use & Care Manual for the suggested temperature control settings.
- Periodic cleaning of the condenser will help the refrigerator run more efficiently. See the *Care and Cleaning Chart* on page 15.
- Do not overcrowd the refrigerator or block cold air vents. Doing so causes the refrigerator to run longer and use more energy.
- Cover foods and wipe containers dry before placing them in the refrigerator. This cuts down on moisture build-up inside the unit.
- Organize the refrigerator to reduce door openings. Remove as many items as needed at one time and close the door as soon as possible.

NORMAL OPERATING SOUNDS & SIGHTS

UNDERSTANDING THE SOUNDS YOU MAY HEAR

Your new high-efficiency refrigerator may make unfamiliar sounds. These are all normal sounds and soon will become familiar to you. They also indicate your refrigerator is operating as designed. Hard surfaces, such as vinyl or wood floors, walls, and kitchen cabinets may make sounds more noticeable. Listed below are descriptions of some of the most common sounds you may hear, and what is causing them.

NOTE

Rigid foam insulation is very energy efficient, but is not a sound insulator.

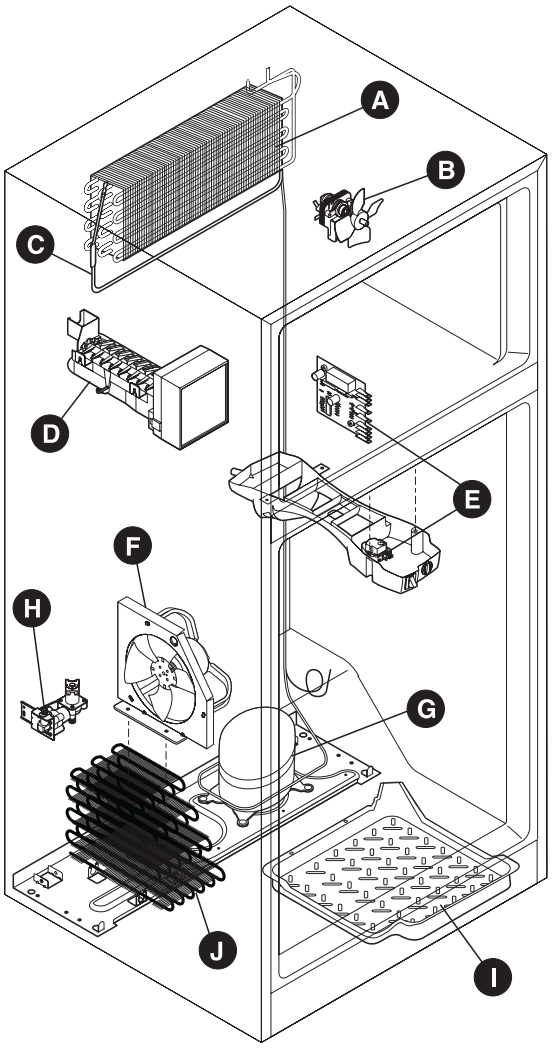

A. Evaporator

The flow of refrigerant through the evaporator may create a boiling or gurgling sound.

B. Evaporator Fan

You may hear air being forced through the refrigerator by the evaporator fan.

C. Defrost Heater

During defrost cycles, water dripping onto the defrost heater may cause a hissing or sizzling sound. After defrosting, a popping sound may occur.

IMPORTANT

During the automatic defrost cycle, you may notice a red glow in the vents on the back wall of your freezer compartment. This is normal during the defrost cycle.

D. Automatic Ice Maker

If your refrigerator is equipped with an automatic ice maker, you will hear ice cubes falling into the ice bin.

E. Cold Control & Defrost Timer or Automatic Defrost Control

These parts can produce a snapping or clicking sound when turning the refrigerator on and off. The timer also produces sounds similar to an electric clock.

F. Condenser Fan

If condenser coils are located underneath your refrigerator as shown in the drawing at the left, you have a condenser fan. You may hear air being forced through the condenser by the condenser fan.

G. Compressor

Modern, high-efficiency compressors operate much faster than older models. The compressor may have a high-pitched hum or pulsating sound.

H. Water Valve

If your refrigerator is equipped with an automatic ice maker, you will hear a buzzing sound as the water valve opens to fill the ice maker during each cycle.

I. Drain Pan (Nonremovable)

You may hear water running into the drain pan during the defrost cycle. The drain pan will be located on top of the compressor for air-cooled condensers (black coils on back of refrigerator).

J. Condenser Coils (Fan-cooled models only)

CARE & CLEANING

Keep your refrigerator and freezer clean to prevent odor build-up. Wipe up any spills immediately and clean both sections at least twice a year. **Never** use any type of scouring pads, brushes, abrasive cleaners or strong alkaline solutions on any surface. **Do not** wash any removable parts in a dishwasher. ***Always unplug the electrical power cord from the wall outlet before cleaning.***

⚠ CAUTION

- **When moving the refrigerator, pull straight out. Do not shift the refrigerator from side to side as this may tear or gouge the floor covering. If the refrigerator has an automatic ice maker, be careful not to move the refrigerator beyond the plumbing connections.**
- **Damp objects stick to cold metal surfaces. Do not touch refrigerated surfaces with wet or damp hands.**
- **Never use CHLORIDE to clean stainless steel.**

NOTE

- Turning the refrigerator temperature control to "**0**" turns off the compressor, but does not disconnect electrical power to the light bulb or other electrical components. To turn off power to your refrigerator, you must unplug the power cord from the wall outlet.
- Do not use razor blades or other sharp instruments which can scratch the appliance surface when removing adhesive labels. Any glue left from tape or labels can be removed with a mixture of warm water and mild detergent, or, touch the glue residue with the sticky side of tape you have already removed. **Do not remove the serial plate.**

Care & Cleaning Chart

Part	What To Use	Tips and Precautions
Interior/Door Liner	• Soap and water • Baking soda and water	Use 2 tablespoons of baking soda in 1 quart of warm water**. Be sure to wring excess water out of sponge or cloth before cleaning around controls, light bulb or any electrical part.**
Door Gaskets	• Soap and water	Wipe gaskets with a clean soft cloth.
Drawers/Bins	• Soap and water	Do not wash any removable items (bins, drawers, etc.) in dishwasher.
Glass Shelves	• Soap and water • Glass cleaner • Mild liquid sprays	Allow glass to warm to room temperature before immersing in warm water.
Toe Grille	• Soap and water • Mild liquid sprays • Vacuum attachment	Vacuum dust from front of toe grille. Remove toe grille (See illustration on page 4). Vacuum backside and wipe with sudsy cloth or sponge. Rinse and dry.
Exterior and Handles	• Soap and water	Do not use commercial household cleaners, ammonia, or alcohol to clean handles.
Exterior and Handles **(Stainless Steel Models Only)**	• Soap and water • Ammonia • Stainless Steel Cleaners	**⚠ CAUTION** Never use CHLORIDE to clean stainless steel. Clean stainless steel front and handles with non-abrasive soapy water and a dishcloth. Rinse with clean water and a soft cloth. Wipe stubborn spots with an ammonia-soaked paper towel, and rinse. Use a non-abrasive stainless steel cleaner. These cleaners can be purchased at most home improvement or major department stores. Always follow manufacturer's instructions. NOTE: Always clean, wipe and dry with the grain to prevent cross-grain scratching. Wash the rest of the cabinet with warm water and mild liquid detergent. Rinse well, and wipe dry with a clean soft cloth.
Condenser Coils (Fan-cooled models only)	• Condenser Cleaning Brush is available from your dealer. • Vacuum Cleaner	No need to clean unless operating refrigerator under particularly dusty or greasy conditions, or if there is significant pet traffic in your home. If cleaning is necessary, remove toe grille and use extended vacuum attachment and condenser cleaning brush to remove dust build-up from condenser coils (see item "J" in illustration on page 14 for location).
Condenser Coils (Air-cooled models only)	• Vacuum Cleaner	Use the dusting tool attachment on your vacuum to remove dust build-up on the condenser coils (black tubes and wires) attached to the back of air-cooled refrigerators only.
Defrost Water Pan	• Soap and water	Some models have defrost water pan located on top of compressor at bottom rear of refrigerator (see illustration on next page). Wipe water pan with damp cloth. NOTE: The defrost water pan is NOT removable.

NEVER CLEAN CONDENSER (SOME MODELS)

If your refrigerator is equipped with a Never Clean condenser, there's no need to clean the condenser under normal operating conditions. If the refrigerator is operated under particularly dusty or greasy conditions, or if there is significant pet traffic in your home, it may be necessary to periodically clean the condenser for maximum efficiency.

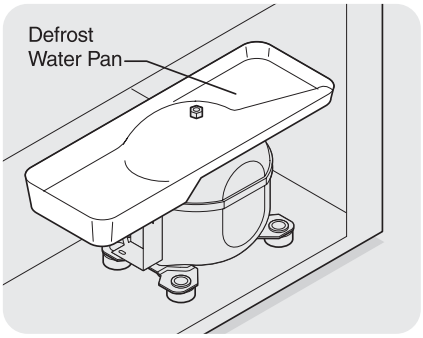

Defrost Water Pan (some models)

REPLACING THE FREEZER LIGHT BULB (SOME MODELS)

1. Unplug refrigerator.
2. Wear gloves as protection against possible broken glass.
3. Unsnap light shield as shown.
4. Unscrew and replace old bulb with an appliance bulb of the same wattage.
5. Replace light shield.
6. Remember to plug the refrigerator back in.

⚠ CAUTION

Avoid cuts when replacing light bulbs, wear gloves.

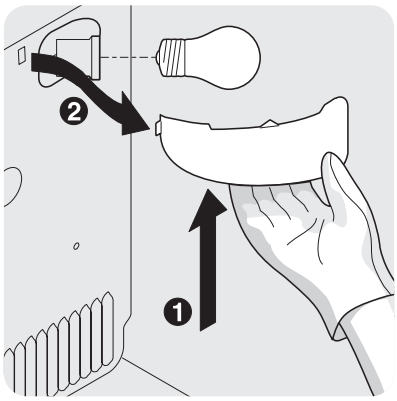

Freezer Light Cover Removal

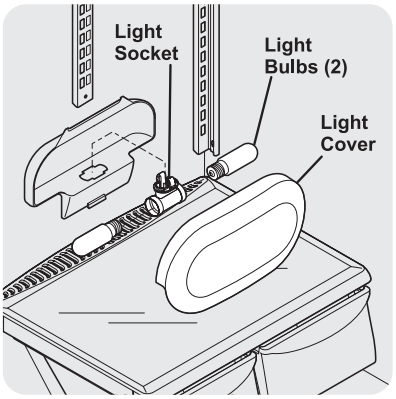

Refrigerator Mid-Level Light Cover Removal

Vacation and Moving Tips	
Short Vacations	• Leave refrigerator operating during vacations of 3 weeks or less. • Use all perishable items from refrigerator compartment. • Turn automatic ice maker off and empty ice bucket, even if you will only be gone for a few days.
Long Vacations	• Remove all food and ice if you will be gone one month or more. • Turn controls to "O" (the OFF position) and disconnect power. • Turn off automatic ice maker and turn water supply valve to closed position. • Clean interior thoroughly. • Leave both doors open to prevent odors and mold build-up. Block doors open if necessary.
Moving	• Remove all food and ice. • If using handcart, load from side. • Adjust rollers all the way up to protect them during sliding or moving. • Pad cabinet to avoid scratching surface.

Major Appliance Warranty Information

Your appliance is covered by a one year limited warranty. For one year from your original date of purchase, Electrolux will pay all costs for repairing or replacing any parts of this appliance that prove to be defective in materials or workmanship when such appliance is installed, used and maintained in accordance with the provided instructions.

Exclusions

This warranty does not cover the following:

1. Products with original serial numbers that have been removed, altered or cannot be readily determined.
2. Product that has been transferred from its original owner to another party or removed outside the USA or Canada.
3. Rust on the interior or exterior of the unit.
4. Products purchased "as-is" are not covered by this warranty.
5. Food loss due to any refrigerator or freezer failures.
6. Products used in a commercial setting.
7. Service calls which do not involve malfunction or defects in materials or workmanship, or for appliances not in ordinary household use or used other than in accordance with the provided instructions.
8. Service calls to correct the installation of your appliance or to instruct you how to use your appliance.
9. Expenses for making the appliance accessible for servicing, such as removal of trim, cupboards, shelves, etc.,which are not a part of the appliance when it is shipped from the factory.
10. Service calls to repair or replace appliance light bulbs, air filters, water filters, other consumables, or knobs, handles, or other cosmetic parts.
11. Surcharges including, but not limited to, any after hour, weekend, or holiday service calls, tolls, ferry trip charges, or mileage expense for service calls to remote areas, including the state of Alaska.
12. Damages to the finish of appliance or home incurred during installation, including but not limited to floors, cabinets, walls, etc.
13. Damages caused by: services performed by unauthorized service companies; use of parts other than genuine Electrolux parts or parts obtained from persons other than authorized service companies; or external causes such as abuse, misuse, inadequate power supply, accidents, fires, or acts of God.

DISCLAIMER OF IMPLIED WARRANTIES; LIMITATION OF REMEDIES

CUSTOMER'S SOLE AND EXCLUSIVE REMEDY UNDER THIS LIMITED WARRANTY SHALL BE PRODUCT REPAIR OR REPLACEMENT AS PROVIDED HEREIN. CLAIMS BASED ON IMPLIED WARRANTIES, INCLUDING WARRANTIES OF MERCHANTABILITY OR FITNESS FOR A PARTICULAR PURPOSE, ARE LIMITED TO ONE YEAR OR THE SHORTEST PERIOD ALLOWED BY LAW, BUT NOT LESS THAN ONE YEAR. ELECTROLUX SHALL NOT BE LIABLE FOR CONSEQUENTIAL OR INCIDENTAL DAMAGES SUCH AS PROPERTY DAMAGE AND INCIDENTAL EXPENSES RESULTING FROM ANY BREACH OF THIS WRITTEN LIMITED WARRANTY OR ANY IMPLIED WARRANTY. SOME STATES AND PROVINCES DO NOT ALLOW THE EXCLUSION OR LIMITATION OF INCIDENTAL OR CONSEQUENTIAL DAMAGES, OR LIMITATIONS ON THE DURATION OF IMPLIED WARRANTIES, SO THESE LIMITATIONS OR EXCLUSIONS MAY NOT APPLY TO YOU. THIS WRITTEN WARRANTY GIVES YOU SPECIFIC LEGAL RIGHTS. YOU MAY ALSO HAVE OTHER RIGHTS THAT VARY FROM STATE TO STATE.

If You Need Service

Keep your receipt, delivery slip, or some other appropriate payment record to establish the warranty period should service be required. If service is performed, it is in your best interest to obtain and keep all receipts. Service under this warranty must be obtained by contacting Electrolux at the addresses or phone numbers below.

This warranty only applies in the USA and Canada. In the USA, your appliance is warranted by Electrolux Major Appliances North America, a division of Electrolux Home Products, Inc. In Canada, your appliance is warranted by Electrolux Canada Corp. Electrolux authorizes no person to change or add to any obligations under this warranty. Obligations for service and parts under this warranty must be performed by Electrolux or an authorized service company. Product features or specifications as described or illustrated are subject to change without notice.

USA
1.800.944.9044
Electrolux Major Appliances
North America
P.O. Box 212378
Augusta, GA 30907

Electrolux

Canada
1.800.668.4606
Electrolux Canada Corp.
5855 Terry Fox Way
Mississauga, Ontario, Canada
L5V 3E4

ATTENTION

To Properly Install Your Refrigerator

See "Installation" Section On Pages 4-5

OR

To Reverse The Doors

See "Door Removal & Reversal" Section On Pages 6-9

Common Occurrences	Before calling for service, review this list. It may save you time and expense. This list includes common occurrences that are not the result of defective workmanship or materials in this appliance.
Refrigerator does not run.	• Ensure plug is tightly pushed into electrical outlet. • Check/replace fuse with a 15 amp time-delay fuse. Reset circuit breaker. • The temperature control is turned to "**O**". • Refrigerator may be in defrost cycle. Wait 20 minutes and check again.
Freezer temperature too cold. Refrigerator temperature is satisfactory.	• Set freezer control to a warmer setting until freezer temperature is satisfactory. Allow 24 hours for the temperature to stabilize.
Refrigerator temperature too cold. Freezer temperature is satisfactory.	• Set refrigerator control to a warmer setting. Allow 24 hours for temperature to stabilize. Then check freezer temperatures and adjust as needed.
*** Refrigerator is noisy or vibrates.**	• The cabinet is not level. • Floor is weak.
Odors in refrigerator.	• Interior needs to be cleaned. • Foods that produce odors should be covered or wrapped.
Cabinet light not working.	• Replace light bulb. • Ensure plug is tightly pushed into electrical outlet. • Light switch may be stuck. Push in light switch, located on the refrigerator control box, to release.
Automatic ice maker not working. (some models)	• Ensure the Wire Signal Arm is not in UP position. • Ice maker should produce 4 to 5 pounds of ice in a 24 hour period. • Water supply is turned off. • Water pressure is too low. • The freezer is not cold enough.

** See Normal Operating Sounds and Sights section on page 14.*