Installation and usage instructions

I Table of Contents

1 Introduction
1.1 General considerations
1.2 Safety standards
1.3 Environment

2 Usage instructions
2.1 Thermostat-controlled temperature regulation
2.2 Usage recommendations
2.3 Defrosting

3 Maintenance
3.1 Low voltage protection

4 Installation instructions
4.1 Ventilation
4.2 Door panelling
4.3 Door reversibility
4.4 Electrical Connections
4.5 Size of the electrical cables
4.6 Internal lighting
4.7 Wiring diagram
4.8 SEC – Smart Energy Control

5 Technical data

6 Troubleshooting

7 Installation Dimensions and Measurements

1. Introduction

1.1 General considerations

Isotherm marine refrigerators are specifically designed to meet the specific requirements of the marine environment in terms of performance and reliability. Isotherm marine refrigerators are designed exclusively for recessed installation.
The units are equipped with an innovative watertight and leak-proof compressor that offers low power consumption with minimal noise. The refrigerators are easy to install. They are capable of functioning at angles of up to 30°, or even greater for brief periods of time.
The following points should be observed in order to ensure maximum performance:

- Needlessly opening the refrigerator door will result in greater power consumption.
- Ensuring adequate ventilation for the compressor and condensing unit will significantly reduce power consumption.
- The electrical system must be kept in good condition. Inspect the batteries and check the charge levels regularly.
- Always use a separate starter battery for the motor.
- Respect the indications provided regarding the size of the cables and fuses.
- Keep the inside of the refrigerator clean and dry. Remove the condensation water from the drip tray beneath the refrigerator's freezer compartment.
- If the refrigerator is not expected to be used for a reasonable period of time, disconnect its power supplies and leave the door ajar in order to ensure adequate ventilation.
- Check for any visible damage on the refrigerator's mechanical and electrical components prior to use.
- Clean the inside of the refrigerator with a mild detergent and warm water prior to use.

Each refrigerator comes complete with an upper freezer compartment with a door. This compartment can be used to store frozen foods for up to 4-5 days, but is not cold enough to freeze them. It is possible to make ice cubes using the special tray.
The CR 130 Drink model does not come equipped with a freezer compartment. The CR 49, CR 65, CR 85 and CR 130 models are also available in the INOX version.
They feature an exclusive door with a stainless steel casing, a stainless steel frame on three sides for the flush mounting and perfect levelling of the front, and a more robust stainless steel door latch.
The interior also comes with various stainless steel elements.

1.2 Safety standards

- When connecting to the land power supply, make sure it is equipped with a grounding conductor and a circuit beaker in order to avoid the risk of serious personal injury. Never touch any damaged or non-insulated electrical cables while the land power supply is enabled.
- Disconnect the appliance from the mains power supply immediately if you happen to encounter any damaged electrical cables.
- After installation, check to make sure that all the unit's live parts, as well as its condensing unit/compressor, can only be accessed by removing the panels or protection systems.

Mortal danger!

- It is absolutely forbidden to tamper with or modify the unit's refrigerant circuit and electrical circuit.
- Never dispose of the refrigerant in the environment.
- Never obstruct the refrigerator's ventilation system.
- Do not install the refrigerator near heat sources, such as stoves, boilers, radiators etc.
- Install the refrigerator in a dry place that's sheltered against water spray.
- Never connect the battery charger directly to the refrigerator.
- The battery charger must be connected to the battery.
- For extended periods of disuse or when defrosting, remove the unit's light bulb or disconnect all of its power supplies.
- In addition to the electrolyte, a newly charged battery can also contain explosive hydrogen gas.

Danger!

- Do not store aerosols containing flammable propellants inside the refrigerator.

- Any repairs to be performed upon the refrigerator's refrigerant circuit should be entrusted to qualified personnel.
- The refrigerator is only suitable for the preservation and/or storage of food items.
- The food items must be stored in their original packing or else in suitable containers.
- Do not place live animals inside the refrigerator.
- **Never open the cooling circuit for any reason.**
- This appliance is not intended to be used by children, people with physical, sensory, mental disabilities or by people with no knowledge or experience of how to use it, who must be supervised by individuals who have read the usage instructions and can assume full responsibility for their safety; never allow children to play with the appliance.
- The appliance must be protected against indirect contact in accordance with the "Heavy Current Regulations".

1.3 Environment

This product complies with the Directive 2002/96/EC regarding waste electrical and electronic equipment (WEEE). The product's proper disposal is essential to preventing negative consequences for the environment and human health.



The symbol shown on the product, the packaging and/or the accompanying documentation indicates that the product should not be disposed of as household waste. The product must be taken to an authorized collection centre for the recycling of electrical and electronic equipment. The product must be disposed of in compliance with the current local environmental regulations regarding waste disposal.
For more information regarding the disposal, recycling and reuse of the product, please contact your local authorities, your local waste collection service or the retailer/company from whom the product was purchased.
The packaging, which has been designed to protect the refrigerator and its components during transport, is manufactured from recyclable material. The packaging bears the recycling symbols and must be disposed of at an appropriate collection centre.



2. Usage instructions

The refrigerators are designed for use in environments with external temperatures ranging from 0 to 45 °C.
The climate class is indicated on the data plate inside the appliance itself.

- **SN** or **extended temperate class** (ambient temperature from 10°C to 32°C);
- **N** or **temperate class** (ambient temperature from 16°C to 32°C);
- **N** or **subtropical class** (ambient temperature from 18°C to 38°C);
- **N** or **tropical class** (ambient temperature from 18°C to 43°C);

2.1 Thermostat-controlled temperature regulation

The refrigerator's temperature is continuously regulated by the thermostat, which also includes a power-off function if turned counter clockwise to the end position.
In order to turn off the appliance, it is necessary to overcome the slight resistance of the knob. The location of the thermostat knob depends on the type of refrigerator.
To adjust the temperature, proceed as follows: turn the thermostat clockwise to lower the temperature, and vice versa.
It is recommended to keep the refrigerator at a temperature of 5-6°C. Since the outside temperature can affect the refrigerator's internal temperature, it can be difficult to maintain the desired temperature when the refrigerator is exposed to heat and/or direct sunlight.

Example Thermostat Knobs:



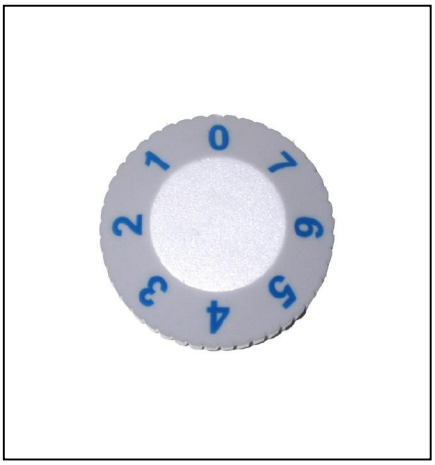

2.2 Usage recommendations

- The freezer compartment can be used to store frozen foods for a few days, but is not cold enough to freeze them.
- If possible, the refrigerator should be turned on for about 6 hours prior to inserting the food items.
- In order to make ice, the ice cube tray should be placed against the evaporator without placing any other products on top of it. For faster ice production, set the thermostat to its maximum cooling capacity.
- Position the products inside the refrigerator in such a way so that they do not obstruct the circulation of air inside.
- Do not cover the shelves with plastic, paper, etc.
- In order reduce the formation of frost inside the refrigerator, liquids should not be stored in open containers.
- Allow hot products to cool before placing them in the refrigerator.

2.3 Defrosting

Since the evaporator operates at temperatures well below freezing, ice and frost will inevitably form upon it.
The humidity in the air, the temperature and the number of times the door is opened will have a significant impact on frost formation.
The refrigerator should always be defrosted when the layer of frost on the evaporator reaches a thickness of 3-4 mm or more.
Turn off the refrigerator by turning the thermostat to its 0 position.
Defrosting should be performed when the products can remain as cool as possible outside of the refrigerator itself.
Do not use sharp objects to remove ice and frost from the evaporator, as this could damage it and result in leaks.
Only turn the refrigerator back on once it has been defrosted, cleaned and thoroughly dried. Remove, empty and dry the drip tray beneath the evaporator. A towel can be placed at the base of the refrigerator during the defrosting procedure in order to facilitate water collection.

3. Maintenance

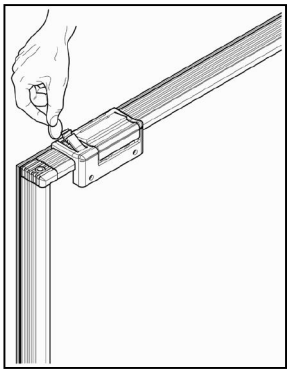

Isotherm Cruise refrigerators are equipped with closed cooling systems, which do not require maintenance or refrigerant refills.
The compressor is specifically designed for mobile applications and guarantees maximum performance and durability. In the winter, the refrigerator must be stored inside the boat, but the compressor will not work at temperatures near or below 0°C.
Seasonal maintenance is limited to the cleaning of the condensing unit behind the refrigerator. In particular, it is necessary to brush/vacuum out all the dust that has accumulated due to the fan. This can be done using a soft brush and a vacuum cleaner.
It is important to keep the inside of the refrigerator clean by washing it with warm water and mild soap and by drying any water/condensation that may be encountered.
In order to prevent damage to the electrical/mechanical components and/or the formation of mould, when shutting off the refrigerator for extended periods of time it is necessary to wait for the unit to defrost completely and to eliminate any condensation that may have formed, both inside the appliance and in the external water collection tray. The natural defrosting time can vary from a few minutes to several hours. In the wintertime and when the refrigerator is shut off, the door should be left slightly ajar for ventilation.

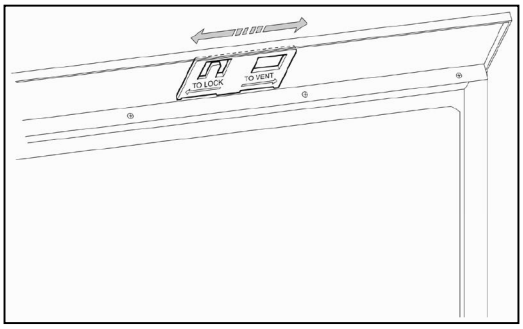

In order to set the door to a proper ventilation position, use a knife or coin to release the stopper. The stopper comes to rest against the refrigerator's upper gasket, thus keeping the door open. For the Elegance models, set the door stopper to its ventilation position. Remove the light bulb or disconnect all of the unit's power supplies in order to avoid needlessly draining the battery.

3.1 Low voltage protection

In order to prevent excessive battery depletion, a protection device shuts off the compressor in case of insufficient voltage and turns it back on when the voltage in the system increases after the batteries have been charged.
See the following diagram, which illustrates the principle for proper ventilation.
If the jumper between C and P in the electronics is removed,
the values indicated in parentheses are to b retained as valid.

System voltage	Shutdown	Start up
12V	9.6 (10.4) V	10.9 (11.7) V
24V	21.3 (22.8) V	22.7 (24.2) V

WARNING: Always make sure that the batteries are in perfect condition before turning on the appliance.

4 Installation instructions

Many boats come equipped with a special compartment for the refrigerator. Isotherm Cruise refrigerators comply with these "standard dimensions". The refrigerator must always be in a horizontal position, with the compressor's rubber feet at the bottom. The compressor is capable of functioning at angles of up to 30°, or even greater for brief periods of time. If the angle is too great, the compressor will turn off and will restart once the tilt has decreased.
In the CR 42 model, the compressor is mounted on a removable corner shelf and comes supplied with extra tubing made from a particularly flexible material, so it can be positioned up to nearly 1.5 m from the refrigerator. The tubing must be carefully arranged so that it does not get pinched or broken at the curves. Do not install the refrigerator near heat sources and avoid exposing it to direct sunlight.
Install the refrigerator in a dry place that's sheltered against water spray.
Do not install the unit near open flames or other forms of heat.
Mounting rails are available as an accessory in order to simplify the refrigerator's installation (for models that don't come supplied with a standard mounting rack). The refrigerator must be resting upon its rubber support feet, and must be fixed in place by the frame or the mounting rails.
The CR 49 and CR 65 models come equipped with a standard mounting frame with three sides. The other models come equipped with mounting rails (which are to be screwed on to each side of the refrigerator). If it is not possible to use the mounting rails, secure the refrigerator in such a way so that it will not tip/slide forward when the door is opened and in the case of rough seas.
The CR INOX version refrigerators can be installed the same manner, and come equipped with a frame for flush installation.
For simple and effective installation, the Elegance models can be secured to their lodgings using the 4 pre-drilled fastening points inside the compartment, which cannot be seen from the outside.

Where the mounting flange is not required, the appliance should be anchored by at least 2 fastening points, in accordance with the provisions of the EN 60335-2-24 standard.
In order to avoid the potential risks associated with the unit's instability, it should always be anchored as indicated in the instructions.

The appliance must be connected via its power cord to an electrical system with the characteristics indicated on the data plate.

The electrical plug must be accessible after installation. The appliance must always be enclosed and not accessible without the use of a tool. The walls and ceiling of the casing must be made from a material that's resistant to the flame test required by the EN 603335-1 standard, or else the walls and ceiling must respectively be more than 2 cm and 5 cm from the appliance itself. There must be least 5 mm of empty space around the two side walls and the rear wall in order to allow for proper ventilation and air circulation. The natural upward air flow can be increased by creating ventilation openings in appropriate locations: one near the compressor at the base of the wall, and the other opposite to the first in the upper portion of the wall or ceiling. The holes must be protected by appropriate grilles.
The refrigerator must be installed in a dry place that's sheltered against water spray and direct sunlight.

4.1 Ventilation

It is extremely important for the compressor/condensing unit located behind the refrigerator to be well ventilated so that the fresh air can enter at the bottom and pass behind the refrigerator, with the hot air being allowed to escape from the top or sides.

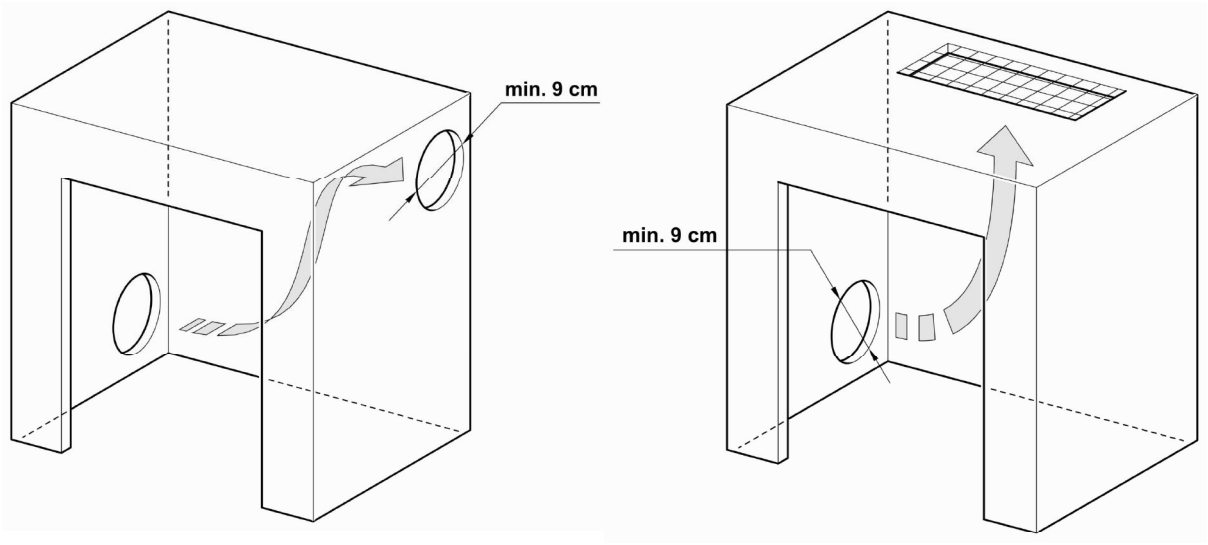

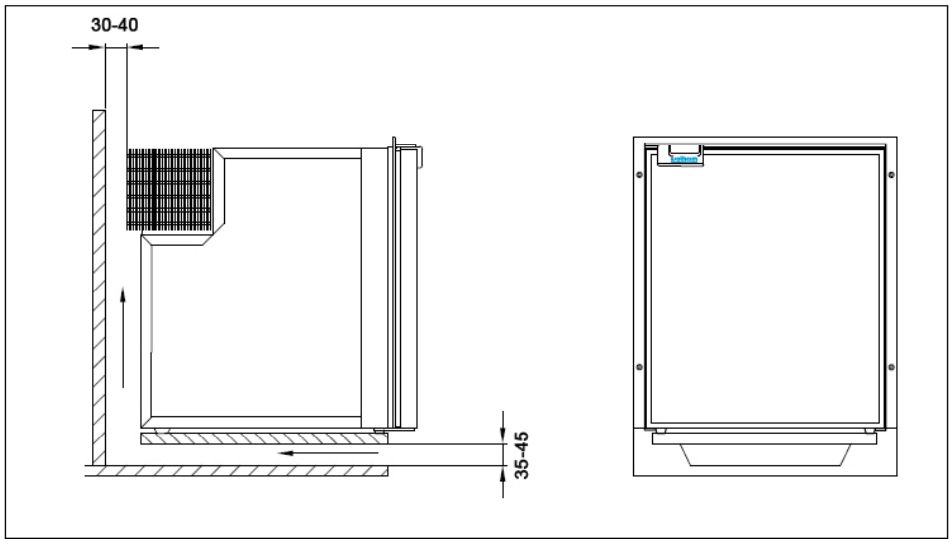

4.2 Door panelling

The CR model refrigerators come equipped with a series of gray door panels. Optional panels are available in white, teak, mahogany and cherry.
The CR 42, 49 and 65 models are also available with an all-white door and a stainless steel mounting frame.
The INOX models come equipped with a stainless steel door, without replaceable door panels.
A replacement door panel can be installed over top of the standard gray panel. Remove the plastic gasket at the bottom of the door by pulling it in a straight line and releasing the latch. The stopper is fastened with three screws. See the diagram.

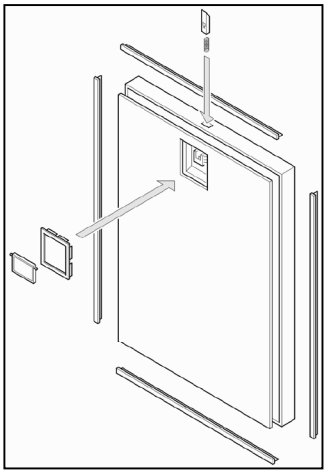

Insert the new panel over the gray panel, slide it beneath the edge of the upper seal, and manually reposition the lower seal. Reinstall the stopper.
For the Elegance models, gently extract the 4 side rails that hold the panel in place and remove the small frame of the handle. At this point the panel and double-sided tape can be removed from the door. Install the replacement panel using new tape (2 strips on the sides and 2 at the centre).

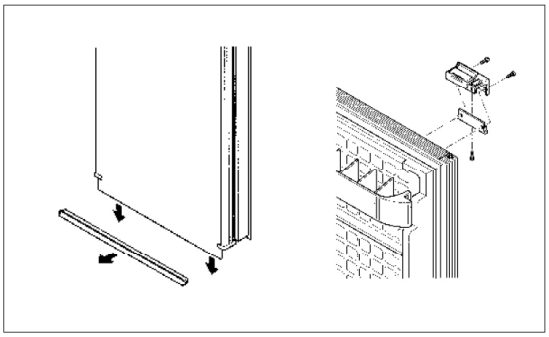

Gently reattach the handle's frame and reinsert the 4 side rails.

4.3 Door reversibility

The refrigerator door is generally hinged on the right hand side. The direction in which the door opens can be inverted by moving the hinge's upper and lower attachments to the other side. The door's latch should also be moved to the other side, see the diagram above. The lower hinge attachment on the CR 42 model is designed in such a way so that it is sufficient to move the plastic elements and the hinge pin to the other side.
At the top, the pin that's screwed into the upper gasket must be moved to the other side.
For the CR 49, CR 65, CR 85 and CR 130 models, the upper and lower hinge attachments must be moved to the other side, while at the bottom they must be switched with the door's support.
For the CR 100 model, the upper hinge pin in the ventilation grille must be moved to the other side, while the lower attachments must be switched. The hinges can be moved to the other side for the CR INOX models as well (up to the CR85 INOX size), as they have the same door that can be opened in both directions. The upper and lower hinge attachments must be moved to the other side. The hinges for the CR 130 INOX model cannot be moved to the other side as the door's stopper is mounted laterally. Therefore, the left and right doors are not interchangeable. See the diagram.

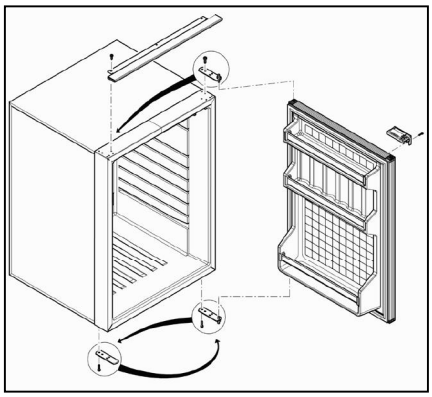

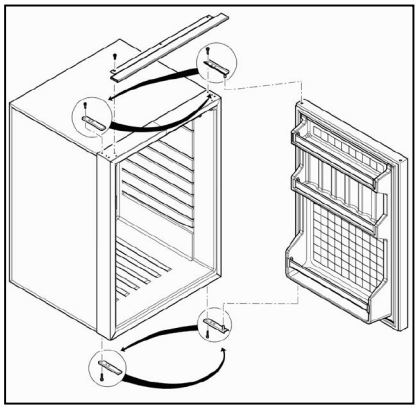

4.4 Electrical Connections

In order connect the unit to the boat's electrical system, proceed as follows:
- Before turning on the appliance, check to make sure that the voltage of the electrical system and/or battery complies with that which is indicated on the unit's data plate.
- Always use cables of an adequate cross-section
(see the recommendations in the following table).
- Always use normal or tinned multi-conductor copper wire, suitable for marine environments.
- Connect the refrigerator directly to the battery or to the relative main switch and make sure that the system is equipped with an electric device that's capable of protecting the circuit against possible overcurrents.
If the power supply voltage is different from the 12/24Vdc power supply, install a ΔI 0.03A differential circuit breaker. Avoid connecting the unit via the boat's control panel as this could result in voltage drops.
- Insert a fuse upstream from the refrigerator (see the table below).
- Connect the red wire to the electrical system's positive terminal, and connect the black wire the negative terminal. Use a pressed lug terminal that's suitable for the cable's size.
- A separate switch that simultaneously disconnects the power cables must be installed upstream from the refrigerator. Check to make sure that the installed switch supports the corresponding load indicated in the table below:

Models	12Vdc	24Vdc
CR36,CR 40 CUBE CR42,CR49,CR65,CR65F,CR63F CR85,CR90F, CR90 BIG, CR100,CR130	15A	7.5A
CR195	25A	12.5A
CR200	20A	10A

Do not plug the refrigerator directly into the battery charger if there is not a battery connected in parallel.
When the power cable is damaged, it must be replaced by the manufacturer or else by a qualified Service Centre.
Disconnect the appliance from the mains power supply immediately if you happen to encounter any damaged electrical cables.

4.5 Size of the electrical cables

- Always use cables of a suitable cross-section. The minimum cross-sections are listed in the table below:

Cross-section mm2	Cross-section AWG	Max. cable length 12V m/ft	Max. cable length 24V m/ft
2.5	13	2.5/8	5/16
4	11	4/13	8/26
6	9	6/19	12/39
10	7	10/33	20/66

4.6 Internal lighting

The refrigerators can be equipped with internal lighting. Make sure that an appropriate 12/24V light bulb has been installed based on the voltage of the electrical system that the refrigerator is connected to. The consignment includes a 12V and 24V light bulb, with a maximum power of 3 watts.
Always use the 12V light bulb with the CR130 Drink model and the models equipped with an optional AC/DC control unit, regardless of the power supply.
For all models equipped with optional Power Pack power supplies, always use the 24V light bulb (max. 3 watts). A high-brightness LED 12/24V (max. 3 Watts) light bulb can be used as an alternative (not included).

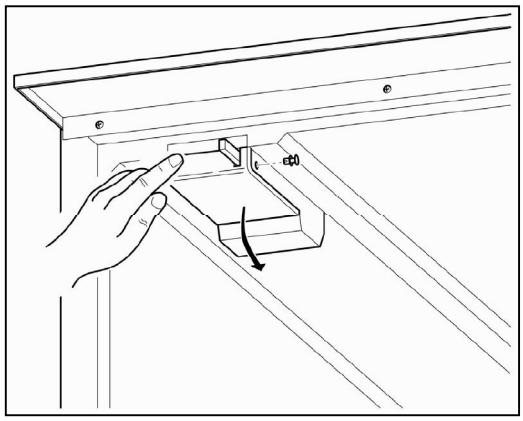
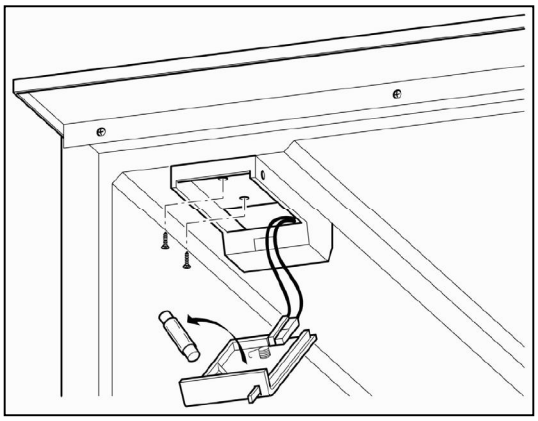
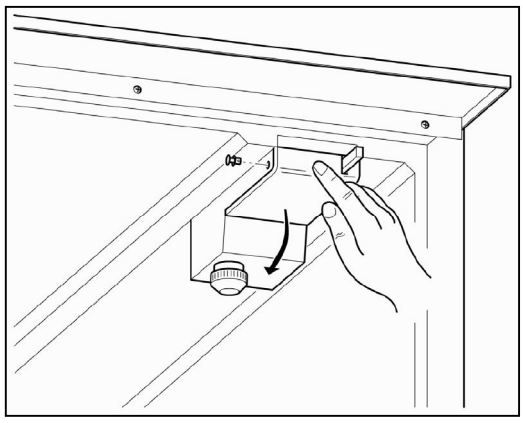
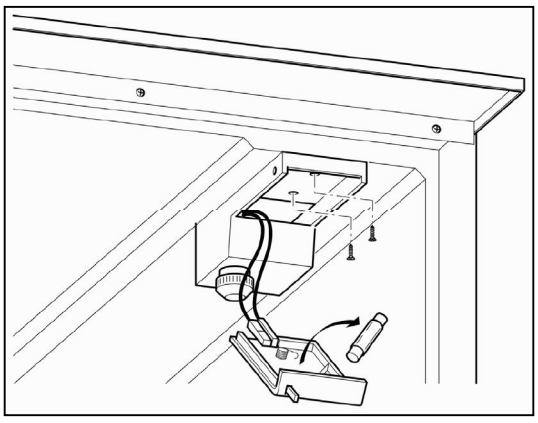

For all the refrigerators, with the exception of the CR 42, CR 42 INOX and CR 100 models, the interior lighting is installed at the top. Check to make sure that a proper 12 V or 24 V light bulb has been installed, based on the voltage of the electrical system to which the refrigerator has been connected. The consignment includes a 12 V or 24 V light bulb (Max power: 3 W). In order to replace the light bulb, slide the lighting unit's glass down using the appropriate lever. Replace the light bulb and to return the lighting unit to its original state. See the diagram.

4.7 Wiring diagram

Refrigerator with standard thermostat (12V/24V)

1. 12/24 V Electronics
2. Battery
3. Fan
4. Thermostat
5. Fuse, see the table in section 4.4
6. 12 or 24 V light bulb (max 3 W)
7. Resistance

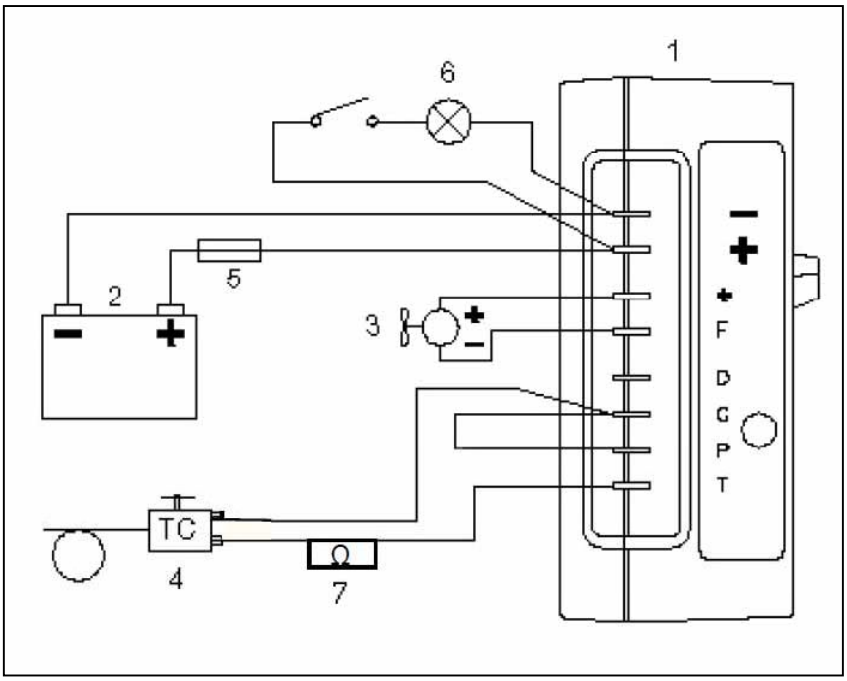

Refrigerator with standard thermostat (12V/24V – 115V/230V)

1. 12/24V – 110V/230V Electronics
2. Battery
3. Fan
4. Thermostat
5. Fuse, see the table in section 4.4
6. 12 or 24 V light bulb (max 3 W)
7. Resistance

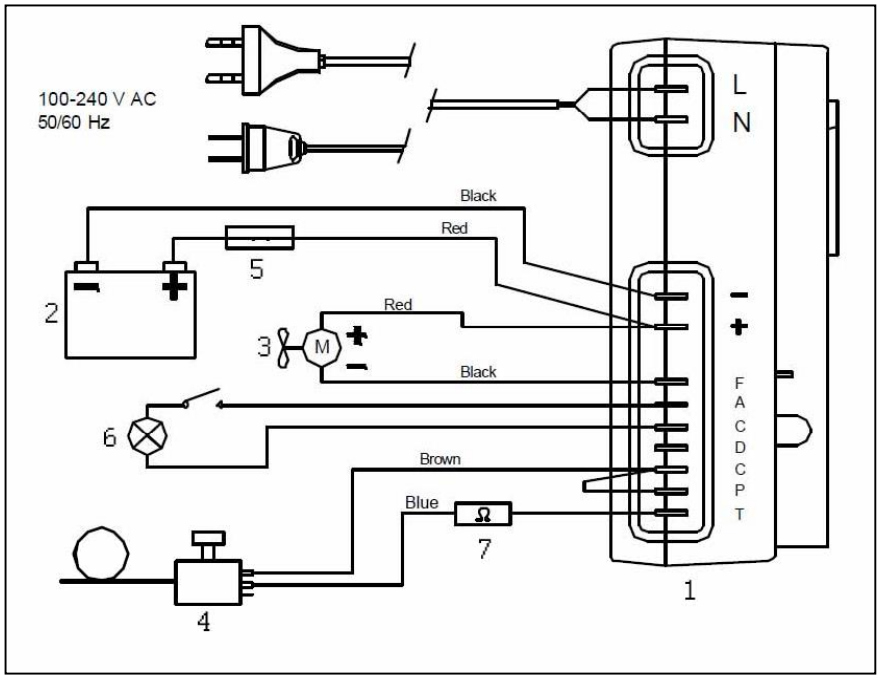

4.8 SEC – Smart Energy Control

With the Isotherm Smart Energy Control System, Indel Webasto Marine offers its clients the unique opportunity to drastically reduce the power consumption of their on board refrigeration systems. This kit can be easily installed in order to update and improve the energy-saving capabilities of your on-board Isotherm refrigeration product. The new CRUISE Elegance line already comes with a predisposed cabinet.

How does it work?

The sophisticated technology of the processor-based Isotherm Smart Energy Control system ensures significant energy savings by continuously scanning a series of key environmental factors (using advanced proprietary algorithms) in order to determine the best compressor speed to maximize the battery's coefficient of performance (COP).

The device not only renders your refrigerator more intelligent, but also allows for a significant amount of cold energy stored in food and soft drinks to be saved. The Isotherm Smart Energy Control system reduces the temperature of the cabinet more than traditional refrigerators, without freezing the food. The temperature is continuously monitored by an air sensor in the cabinet. The cooling energy is stored and reutilized whenever a power surplus is available (with the motor running or with a connection to the mains network available), before the refrigerator switches to battery power.

The results: an energy savings of up to 35%, thanks to the more efficient use of the compressor, and a savings of up to 50% thanks to the combined effects of the cooling energy stored in the food and beverages.

5 Technical data (standard configurations)

Operating voltage: 12 or 24 VDC

Average consumption measured with an internal temperature of +5°C and an external temperature of 25°C.
The average consumption is greatly influenced by the refrigerator's usage mode and the type of ventilation.

Refrigerant: R134a (the system's capacity is indicated on the refrigerator's data plate).

The refrigerators meet the requirements of the EMC directive and bear the CE marking.

CE

Model	Instantaneous consumption 12Vdc (Amperes)	Instantaneous consumption 24Vdc (Amperes)	Average consumption at 25°C Watt/24h
CR 36	8	4	300
CR40 CUBE	5	2.5	186
CR 42	5	2.5	340
CR 49	5	2.5	340
CR 63F	8	4	440
CR 65	5	2.5	360
CR 65F	8	4	440
CR 85	7	3.5	380
CR 90F	8	4	550
CR 90 BIG	8	4	520
CR 100	7	3.5	400
CR 130	8	4	400
CR 130D	8	4	400
CR 195	15	7.5	840
CR 200	12	6	800

6 Troubleshooting

Defect	Possible cause	Intervention
The refrigerator does not cool, the compressor will not start.	No power supply. Battery in poor condition. Faulty thermostat. Defective electronic control unit.	Check to make sure that the electronic control unit is receiving sufficient power and voltage; check the fuse. Verify that the internal lighting is working and that the compressor is receiving power. Check the cables, lugs and connectors. Verify that the battery is charging properly. Check the thermostat: Bridge T - C with a separate cable. If the compressor doesn't start, there is likely a problem with the electronics. They will have to be replaced. If the compressor starts with the bridge, the thermostat is defective. Replace the thermostat.
The compressor only performs brief attempts at starting up.	There is insufficient voltage or else a drop in voltage during the attempt to start. The protection device is activated. The Batteries are drained.	Check the cables and connections; remove any traces of oxidation or corrosion. Charge the batteries, start the motor or connect the battery charger.
The compressor functions but doesn't cool.	Loss of refrigerant through the evaporator or the tubing. Tubing clogged.	Carry out a leak check and repair any leaks, drain and refill the proper amount of R134a refrigerant. (This operation must be carried out by a qualified technician.)
The compressor runs for a long time but doesn't cool properly (reduced efficiency).	Insufficient ventilation, the condensation unit is overheating. The fan is not working properly. There is too much frost on the evaporator. The door does not close properly and lets in warm, moist air. The condenser is blocked by dust.	Increase the ventilation. Replace the fan. Defrost the unit. Correct the position of the door and check the gasket. Clean the condensing unit.
The fuse blows.	The wrong fuse is being used. Defective electronic control unit.	Check the fuse: see the table in section 4.4. Replace the electronic control unit.

For more complicated defects, please contact Indel Webasto Marine S.r.l. Italia or your nearest Isotherm retailer.

7 Dimensions

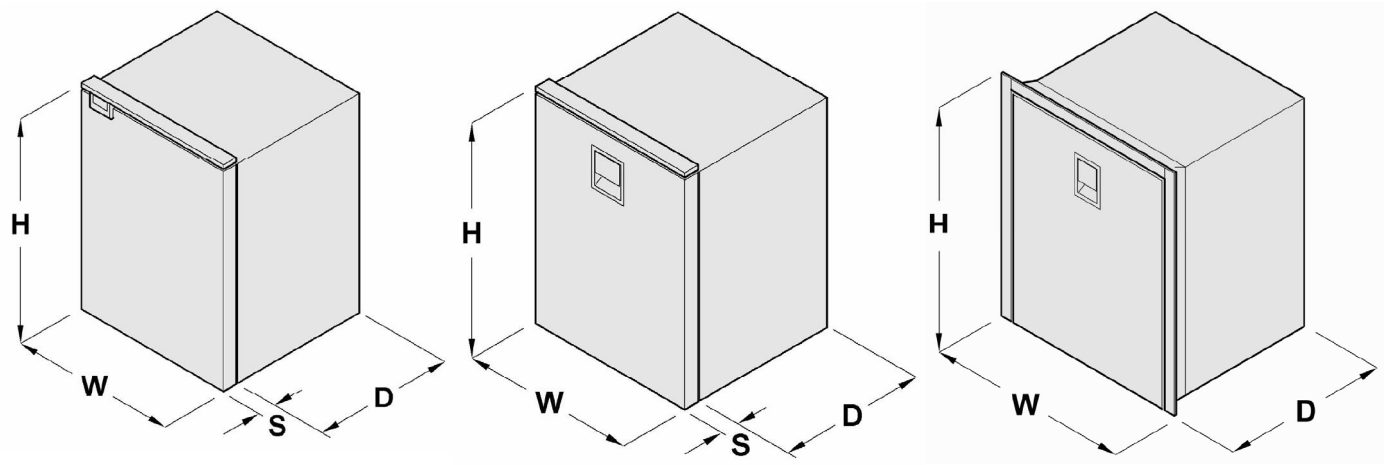

Standard Elegance Inox

Model	Width (mm) [W]	Height (mm) [H]	Dept (mm) [D]	Door Thickness (mm) [S]	Cut-Out (mm) W:H	Flange dimension (mm) Left:Right:Top:Bottom
CR 36	440	250	550+135	35	440:250	/:/:/:/
CR 40 CUBE	420	430	500+90	40	420:430	/:/:/:/
CR 42	380	520	345+135	40	380:520	/:/:10:/
CR 49	386	523	445	40	391:528	20:20:20:/
CR 50	412	532	360+130	40	412:537	/:/:10:/
CR 63F	477	620	515	40	477:625	/:/:10:/
CR 65	455	527	470	40	460:532	20:20:20:/
CR 65F	527	610	540	40	527:615	/:/:10:/
CR 85	477	620	505	40	477:625	/:/:10:/
CR 90F	527	746	520	40	527:751	/:/:10:/
CR90 BIG	478	845	430	40	478:845	/:/:/:/
CR 100	487	746	455	40	487:746	/:/:/:/
CR 130	527	746	505	40	527:751	/:/:10:/
CR 130D	527	746	520	40	527:751	/:/:10:/
CR 195	550	1345	580	/	555:1350	35:35:30:/
CR 195 .	550	1230	560	71	550:1230	/:/:/:/
CR 200	730	880	620	/	735:890	20:20:20:/
CR49EL	381	520	450	50	381:520	/:/:9:/
CR65EL	448	527	480	50	448:527	/:/:9:/

Model	Width (mm) [W]	Height (mm) [H]	Dept (mm) [D]	Door Thickness (mm) [S]	Cut-Out (mm) W:H	Flange dimension (mm) Left:Right:Top:Bottom
CR85EL	477	620	505	50	477:620	/:/:9:/
CR130EL	528	746	505	50	528:746	/:/:9:/
CR165	500	1210	520	55	500:1210	/:/:/:/
CR219	550	1430	520	55	550:1430	/:/:/:/
CR271	550	1660	520	55	550:1660	/:/:/:/
CR 36 INOX	453	255	580+135(1)	/	458:260	30:30:30:30
CR 42 INOX	400	520	380+135(1)	/	405:525	20:20:20:/
CR 49 INOX	400	520	510	/	405:525	20:20:20:/
CR 63F INOX	495	620	555	/	500:625	20:20:20:/
CR 65F INOX	545	610	580	/	550:620	20:20:20:/
CR 65 INOX	470	527	545	/	475:532	20:20:20:/
CR 85 INOX	495	620	555	/	500:625	20:20:20:/
CR 90F INOX	545	743	555	/	550:748	20:20:20:/
CR 130 INOX	545	743	545	/	550:748	20:20:20:/
CR 130D INOX	545	743	560	/	550:748	20:20:20:/
CR 195 INOX	545	1345	580	/	550:1350	20:20:20:/
CR 200 INOX	730	868	620	/	735:873	20:20:20:/

Minimum encumbrance dimensions for recessed versions

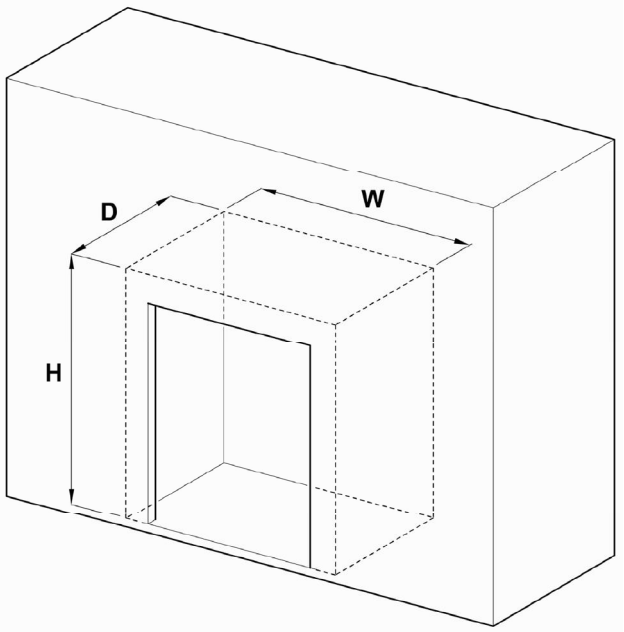

Model	Width (mm) [W]	Height (mm) [H]	Dept (mm) [D]
CR 36	450	255	735
CR 40 CUBE	430	435	640
CR 42	390	525	530
CR 49	396	528	495
CR 50	422	537	540
CR 63F	487	625	565
CR 65	465	532	520
CR 65F	537	615	590
CR 85	487	625	555
CR 90F	537	751	570
CR90 BIG	488	850	480
CR 100	497	751	505
CR 130	537	751	555
CR 130D	537	751	570
CR 195	560	1350	630
CR 195 .	560	1235	610
CR 200	740	885	670

Model	Width (mm) [W]	Height (mm) [H]	Dept (mm) [D]
CR49EL	391	525	500
CR65EL	458	532	530
CR85EL	487	625	555
CR130EL	538	751	555
CR165	510	1215	570
CR219	560	1435	570
CR271	560	1665	570
CR 36 INOX	463	260	765
CR 42 INOX	410	525	565
CR 49 INOX	410	525	560
CR 63F INOX	505	625	605
CR 65F INOX	555	615	630
CR 65 INOX	480	532	595
CR 85 INOX	505	625	605
CR 90F INOX	555	748	605
CR 130 INOX	555	748	595
CR 130D INOX	555	748	610
CR 195 INOX	555	1350	630
CR 200 INOX	740	873	670



Safety indications and warnings

- The unit must be transported in its original package and installed by two people, taking care to avoid causing personal injury and/or property damage.
- The R134a refrigerant contained within the appliance is environmentally friendly and non-flammable.
- Take care to avoid damaging the refrigerant circuit's pipes. Liquid refrigerant sprays could cause eye damage.
- Eliminate all sources of fire and/or sparks within the unit's vicinity; in the event of coolant leakage, remove the unit's electrical plug and ventilate the room thoroughly.
- In the event of damage to the appliance itself, notify the supplier immediately before performing the connections.
- In order to guarantee the unit's safe functionality, follow the indications included with in these instructions when installing and connecting the unit.
- In case of malfunction, disconnect the unit from its mains power supply (without pulling on the power cable). Remove the plug or disconnect/unscrew the fuse.
- **The repair operations must be performed by the manufacturer's Technical Assistance Service. Failure to observe this requirement could result in serious hazards for the user.** The same warning applies to the replacement of the unit's power cables.
- If the power cable is damaged, it must be replaced by the manufacturer, an authorized Service Centre or a qualified technician.
- Disconnect the appliance from the mains power supply immediately if you happen to encounter any damaged electrical cables.
- Do not store explosives or flammable aerosols inside the unit, such as: butane, propane, pentane, etc., especially in contact with the unit's electrical parts. Any gas leaks could result in fires and/or explosions. Aerosols containing such substances can be identified by the flame symbol or other indications shown upon the product's label.
- Keep any drinks with high alcohol content tightly closed and upright.
- Avoid flames and/or sparks inside the unit.
- Do not use electrical devices inside the appliance (i.e., humidifiers, heaters, ice cream makers, etc.).
- Do not use the appliance's floorboards, drawers and/or doors as a support.
- This appliance is not designed to be used by persons (including children) with reduced physical, sensory or mental disabilities or by people who do not have sufficient experience and knowledge, unless they are instructed for the proper use of the equipment or are supervised by other individuals responsible for their safety. Children should be supervised in order to make sure that they do not play with the appliance.
- Avoid prolonged contact with cold surfaces or refrigerated/frozen products. Such contact can result in pain, numbness and frostbite. In the case of prolonged contact, take appropriate measures, i.e. use appropriate gloves.
- Do not consume expired food products as such behaviour could result in food poisoning.
- The unit's electrical components must NOT be exposed to rainfall or other sources of moisture.