SAMSUNG

SAMSUNG Home Appliance Service

SERVICE GUIDE

SIDE-BY-SIDE REFRIGERATOR

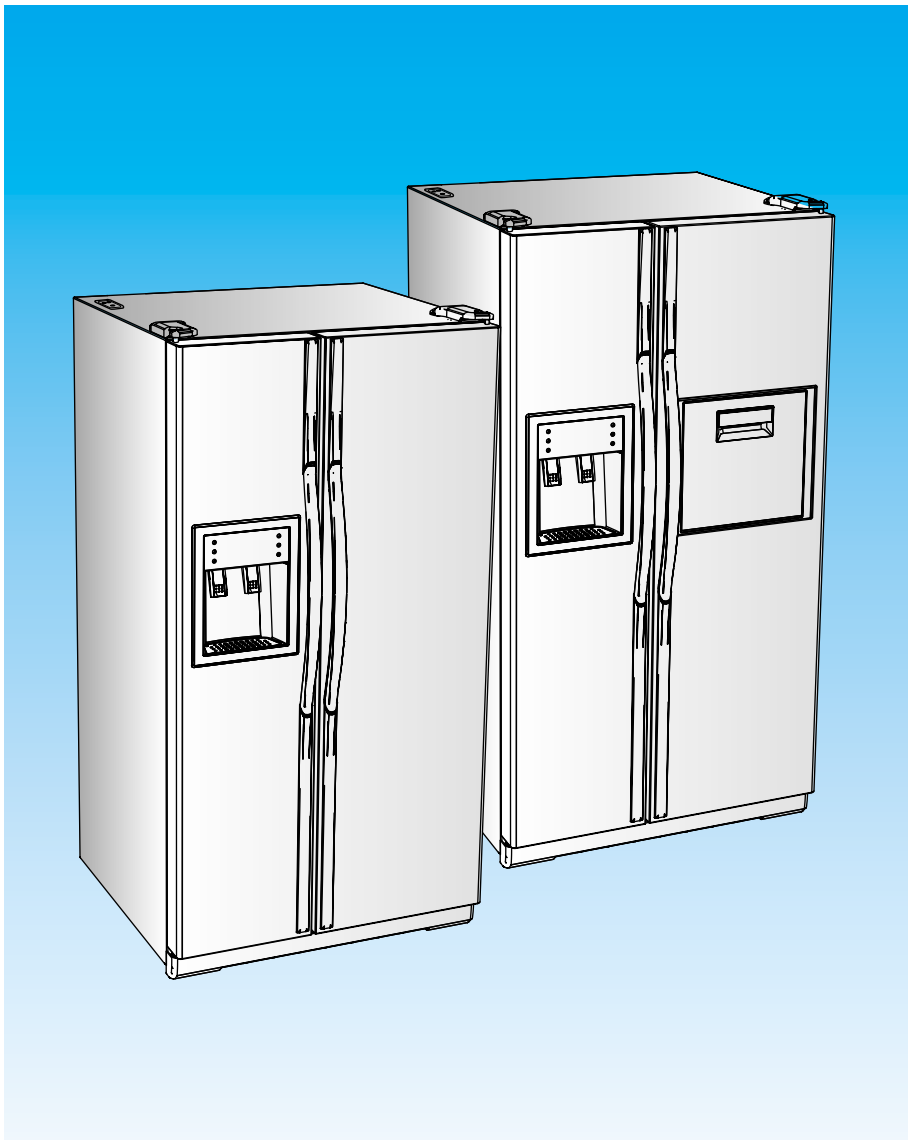

Model:

RS2534WW
RS2534VQ
RS2556WW
RS2556BB
RS2556SH
RS2578WW
RS2578BB
RS2578SH

SAM0059



WARNING

IMPORTANT SAFETY NOTICE

The service guide is for service men with adequate backgrounds of electrical, electronic, and mechanical experience. Any attempt to repair a major appliance may result in personal injury and property damage. The manufacturer or dealer cannot be responsible for the interpretation of this information.

SAMSUNG ELECTRONICS AMERICA, INC.

Technical Service Guide

Copyright ©2004

All rights reserved. This service guide may not be reproduced in whole or in part in any form without written permission from the SAMSUNG ELECTRONICS Company.

Contents

1. Introduction 4

2. Installation 5

3. Nomenclature 6

4. Specifications 7

5. Warranty information 8

6. Interior Views and Dimensions 9

7. Refrigeration Cycle and Cool Air Circulation Route 11

8. Mechanical Disassembly 13

9. Operation Function 23

10. Circuit Descriptions 37

11. Diagnostics 46

13. Safety instruction on services 58

● Appendix Ⅰ(Reference for circuit diagnostics) 59

1. INTRODUCTION

● **A newly developed SAMSUNG side by side refrigerator in 2004 has the following characteristics.**

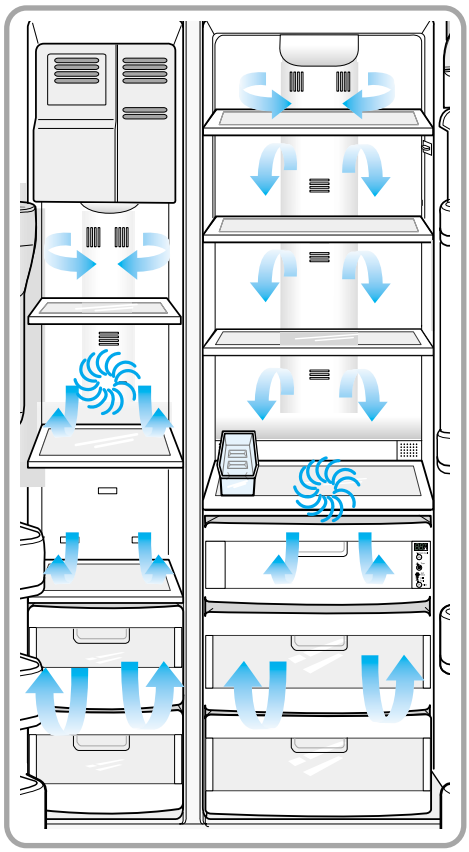

1) Twin Cooling System

· The refrigerator and the freezer have two evaporators. Given this independent system, the freezer and the refrigerator are cooled individually as required and are, therefore, more efficient. Food odor from the refrigerator does not affect food in the freezer due to separate air flow circulation.

2) Multi-Flow System

· Cool air circulates through multiple vents on every shelf level. This provides even distribution of cooling inside cabinets to keep your food fresh longer.

3) Xtra Space™

· Vertical room next to the ice maker in the freezer provides space for pizza etc.

4) Door Alarm

· Beep sound reminds you the door is open.

5) Xtra Fresh™

· Optimized humidity control keeps vegetables & fruits fresh.

6) Deodorizer

· Reusable twin deodorizers keep the refrigerator air fresh and odor free.

7) CoolSelect Zone™ Drawer(RS2556, RS2578)

· User can select Quick Cool, Thaw, for quickly chill items, thaw items. Select Soft freeze, Chill or Cool to control the temperature of the drawer.

2. INSTALLATION

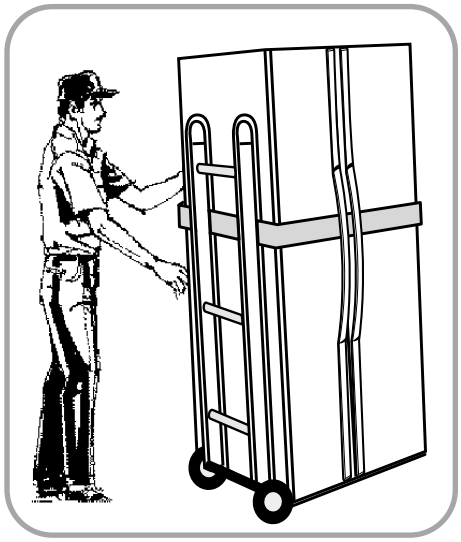

1) To protect refrigerator in movement
Use padded hand truck as shown. If entrance width is less than 39 ″, remove doors prior to installation and reattach doors according to procedure below.

2) Remove all protective tape and pad in refrigerators.
Connect water lines and power cord. Adjust the clearance between the doors.

3) Set the temperature control to the temperature and wait for an hour.
The refrigerator should get slightly chilled and the motor runs smoothly.

4) Once the refrigerator temperature is sufficiently low
You can store food in the refrigerator. After starting the refrigerator, it takes a few hours to reach the appropriate temperature.

● Removing Doors

Open the freezer and refrigerator doors, and then take off the front leg cover assembly by turning the three screws counter-clockwise. Remove the screw from clamp disconnect, the water tube by pressing the coupler, and pulling the water tube away.

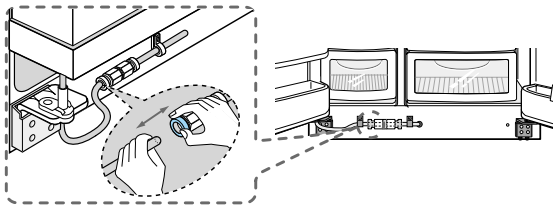

With the door closed, remove the upper hinge cover using a screwdriver, and then disconnect the wires. Remove hinge screws and ground screw counter-clockwise, and take off the upper hinge. Take care removing the door to ensure that it does not fall on you.

Remove the door from the lower hinge by carefully lifting the door so as not to damage the water tube. Remove the lower hinge from the lower hinge bracket by lifting the lower hinge.

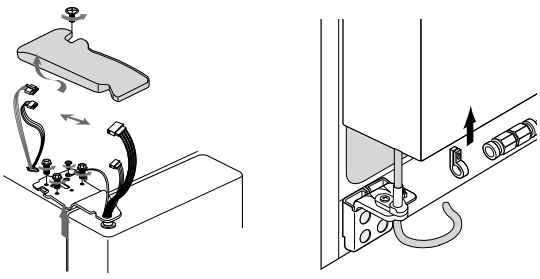

● Attaching Doors

Insert the lower hinge in the bracket lower hinge. Attach the freezer door by inserting the hose in the lower side of the door into the hole in the lower hinge and pulling the hose down.

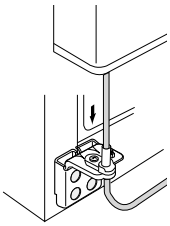

Insert the upper hinge shaft into the hole. After leveling between the upper hinge hole and the hole of the cabinet. Reattach hinge screws and screw in the clockwise direction. Connect the wires. Put the front part of the upper hinge cover on the front part of the upper hinge and reattach from the front part of the upper hinge cover first.

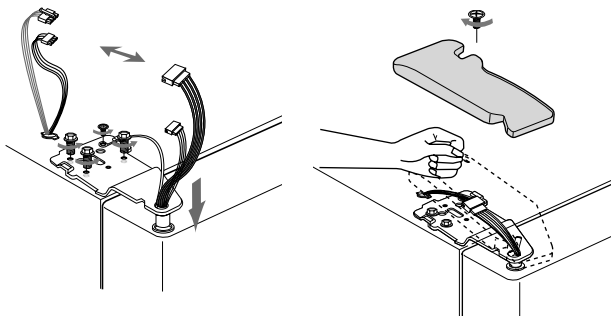

3. Nomenclature

R S 25 34 SL / XAA

Buyer Code

COLOR ; SBS SW-SNOW WHITE SL-NOBLE STAIN
SH-STAINLESS PLATINUM WW-SMOOTH WHITE
VQ-BISQUE BB-BLACK
BMF SW-SNOW WHITE SL-NOBLE GRAY

OPTION ; SBS 34-GOOD 56-BETTER 78-BEST
BMF 55-NO DISPENSER 77-DISPENSER

Capacity ; CU. FT

Family ; S - SIDE BY SIDE (SBS)
H - HomePAD™ (SIDE BY SIDE)
B - BOTTOM MOUNTED FREEZER (BMF)

Product ; R - REFRIGERATOR



4. Specifications

ELECTRICAL SPECIFICATIONS

Defrost Control ..... From 24 to 32 hrs
Defrost Thermistor(502AT) ..... 50°F(off)
Electrical Rating ..... AC115V 60Hz 11.6 Amps
Maximum Current Leakage ..... 0.25 mA
Maximum Ground Path Resistance 0.1 Ohm
Energy Consumption ..... KWH/mo.

NO LOAD PERFORMANCE

Ambient Temperature	70°F	90°F
Refrigerator,°F	34~46	34~46
Freezer,°F	-14~8	-14~8
Run Time,%	<40	<60

REFRIGERATION SYSTEM

Refrigerant Charge (R134a) ..... 7.76 oz
Compressor(MK183C-L2U) ..... 532.3 Btu/hr
Compressor oil ..... Freol α -15
Capillary tube(Dia, Length) ..... 0.033 " ,130 "
Dryer ..... Molecular Sieve XH-9

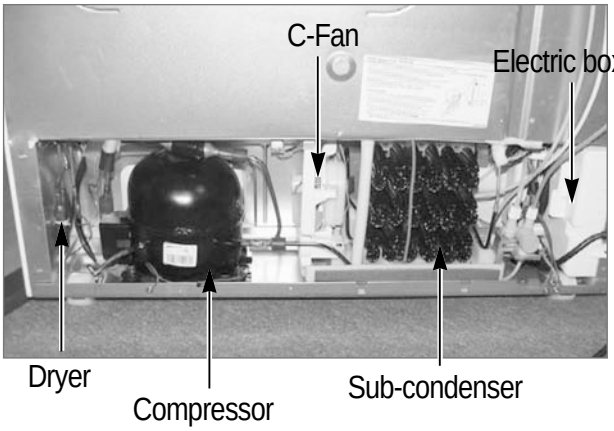

INSTALLATION

Clearance must be provided for air circulation
AT TOP ..... 2 "
AT SIDES ..... 0.1 "
AT REAR ..... 2 "

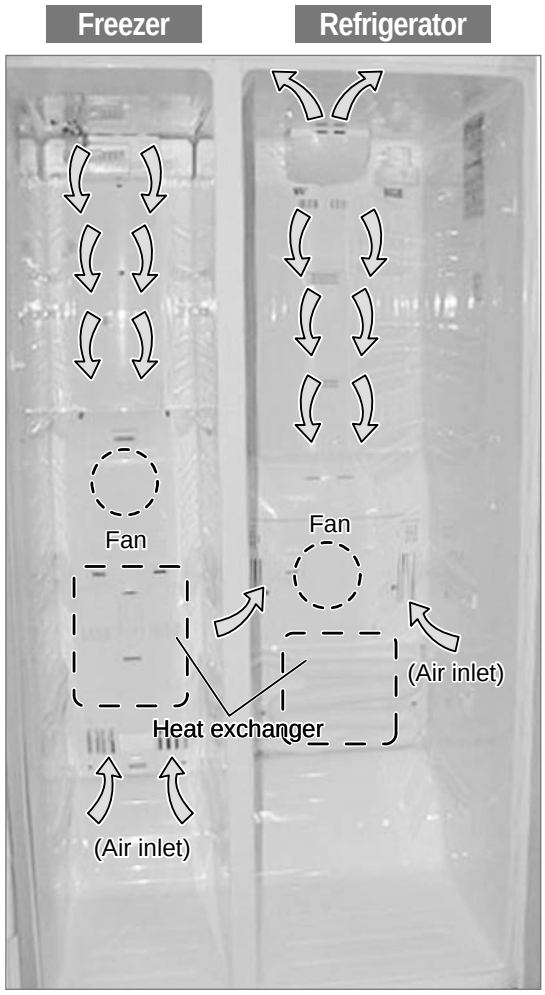

MODELS

RS2534(Good), RS2556(Better), RS2578(Best)

5. Warranty information

SAMSUNG REFRIGERATOR
(18 Cubic Feet and Larger Capacity)

LIMITED WARRANTY TO ORIGINAL PURCHASER

This SAMSUNG brand product, as supplied and distributed by Samsung Electronics America, Inc. (SAMSUNG) and delivered new, in the original carton to the original consumer purchaser, is warranted by SAMSUNG against manufacturing defects in materials and workmanship for a limited warranty period of:

One (1) Year Parts and Labor on Refrigerator
Five (5) Years Parts and Labor on Sealed Refrigeration System Only*
(*Compressor, evaporator, condenser, Dryer, connecting tubing)

This limited warranty begins on the original date of purchase, and is valid only on products purchased and used in the United States. To receive warranty service, the purchaser must contact SAMSUNG for problem determination and service procedures. Warranty service can only be performed by a SAMSUNG authorized service center. The original dated bill of sale must be presented upon request as proof of purchase to SAMSUNG or SAMSUNG's authorized service center.

SAMSUNG will repair or replace any part found to be defective, at our option and at no charge as stipulated herein, with new or reconditioned parts during the limited warranty period specified above. All replaced parts and products become the property of SAMSUNG and must be returned to SAMSUNG. Replacement parts and products assume the remaining original warranty, or ninety (90) days, whichever is longer.

In-home service will be provided during the warranty labor period subject to availability within the contiguous United States. In-home service is not available in all areas. To receive in-home service, the product must be unobstructed and accessible from floor level to service personnel. If during in-home service repair cannot be completed, it may be necessary to remove, repair and return the product. If in-home service is unavailable, SAMSUNG may elect, at our option, to provide for transportation of our choice to and from a SAMSUNG authorized service center. Otherwise, transportation to and from the SAMSUNG authorized service center is the responsibility of the purchaser.

This limited warranty covers manufacturing defects in materials and workmanship encountered in normal, noncommercial use of this product, and shall not apply to the following, including, but not limited to: damage which occurs in shipment; delivery and installation; applications and uses for which this product was not intended; altered product or serial numbers; cosmetic damage or exterior finish; accidents, abuse, neglect, fire, water, lightning or other acts of nature; use of products, equipment, systems, utilities, services, parts, supplies, accessories, applications, installations, repairs, external plumbing and leaks, external wiring, circuit breakers, fuses or connectors not supplied and authorized by SAMSUNG, or which damage this product or result in service problems; incorrect electrical line voltage, fluctuations and surges; customer adjustments and failure to follow operating instructions, cleaning, maintenance and environmental instructions that are covered and prescribed in the instruction book; loss of food due to spoilage; consumable items including filters and light bulbs.

THERE ARE NO EXPRESS WARRANTIES OTHER THAN THOSE LISTED AND DESCRIBED ABOVE, AND NO WARRANTIES WHETHER EXPRESS OR IMPLIED, INCLUDING, BUT NOT LIMITED TO, ANY IMPLIED WARRANTIES OF MERCHANTABILITY OR FITNESS FOR A PARTICULAR PURPOSE, SHALL APPLY AFTER THE EXPRESS WARRANTY PERIODS STATED ABOVE, AND NO OTHER EXPRESS WARRANTY OR GUARANTY GIVEN BY ANY PERSON, FIRM OR CORPORATION WITH RESPECT TO THIS PRODUCT SHALL BE BINDING ON SAMSUNG. SAMSUNG SHALL NOT BE LIABLE FOR LOSS OF REVENUE OR PROFITS, FAILURE TO REALIZE SAVINGS OR OTHER BENEFITS, OR ANY OTHER SPECIAL, INCIDENTAL OR CONSEQUENTIAL DAMAGES CAUSED BY THE USE, MISUSE OR INABILITY TO USE THIS PRODUCT, REGARDLESS OF THE LEGAL THEORY ON WHICH THE CLAIM IS BASED, AND EVEN IF SAMSUNG HAS BEEN ADVISED OF THE POSSIBILITY OF SUCH DAMAGES. NOR SHALL RECOVERY OF ANY KIND AGAINST SAMSUNG BE GREATER IN AMOUNT THAN THE PURCHASE PRICE OF THE PRODUCT SOLD BY SAMSUNG AND CAUSING THE ALLEGED DAMAGE. WITHOUT LIMITING THE FOREGOING, PURCHASER ASSUMES ALL RISK AND LIABILITY FOR LOSS, DAMAGE OR INJURY TO PURCHASER AND PURCHASER'S PROPERTY AND TO OTHERS AND THEIR PROPERTY ARISING OUT OF THE USE, MISUSE OR INABILITY TO USE THIS PRODUCT SOLD BY SAMSUNG NOT CAUSED DIRECTLY BY THE NEGLIGENCE OF SAMSUNG. THIS LIMITED WARRANTY SHALL NOT EXTEND TO ANYONE OTHER THAN THE ORIGINAL PURCHASER OF THIS PRODUCT, IS NONTRANSFERABLE AND STATES YOUR EXCLUSIVE REMEDY.

Some states do not allow limitations on how long an implied warranty lasts, or the exclusion or limitation of incidental or consequential damages, so the above limitations or exclusions may not apply to you. This warranty gives you specific legal rights, and you may also have other rights, which vary from state to state.

To obtain warranty service, please contact SAMSUNG at:

SAMSUNG CUSTOMER CARE CENTER
400 Valley Road, Suite 201, Mt. Arlington, NJ 07856, Tel: 973-601-6000, Fax: 973-601-6001
1-800-SAMSUNG (1-800-726-7864) and www.SAMSUNGUSA.com

061002

6. Interior Views and Dimensions

6-1) Shelves and Bins

Freezer

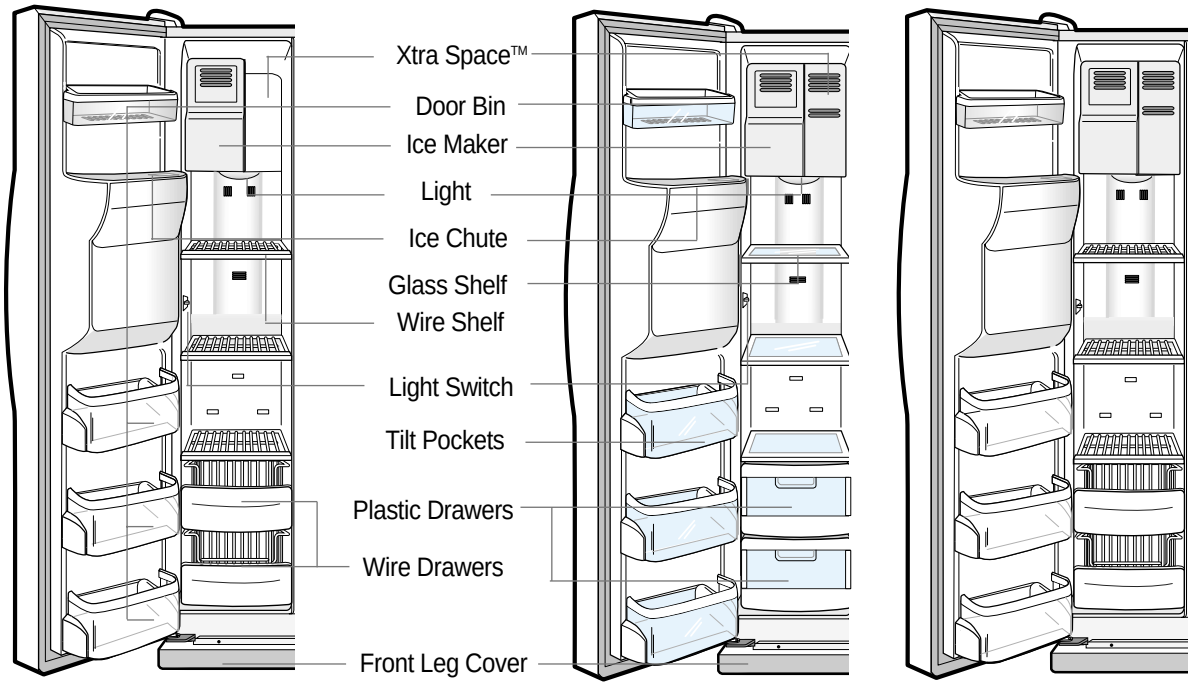

RS2534 Model

RS2578 Model
CoolSelect Zone™

RS2556 Model
CoolSelect Zone™

Refrigerator

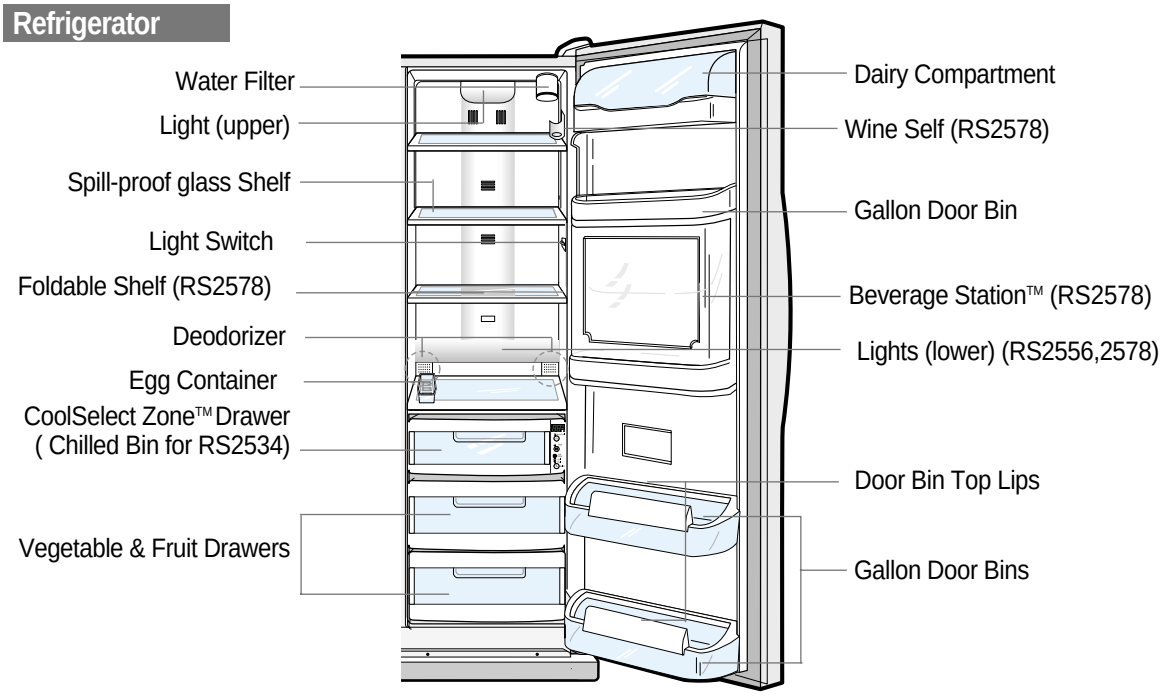

Interior Views and Dimensions

6-2) Dimensions of Refrigerator(RS2534/2556/2578) (Inches)

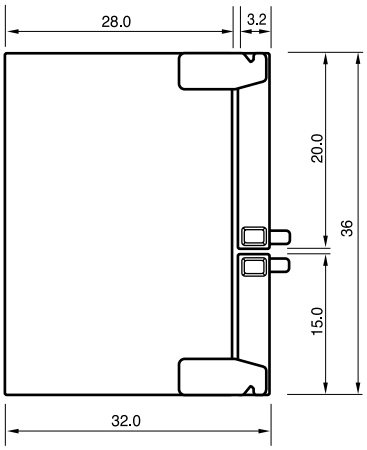

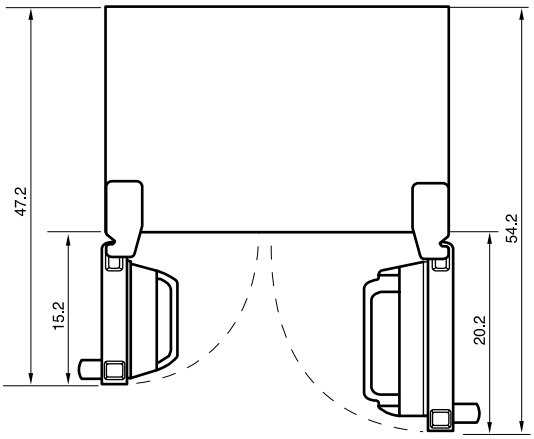

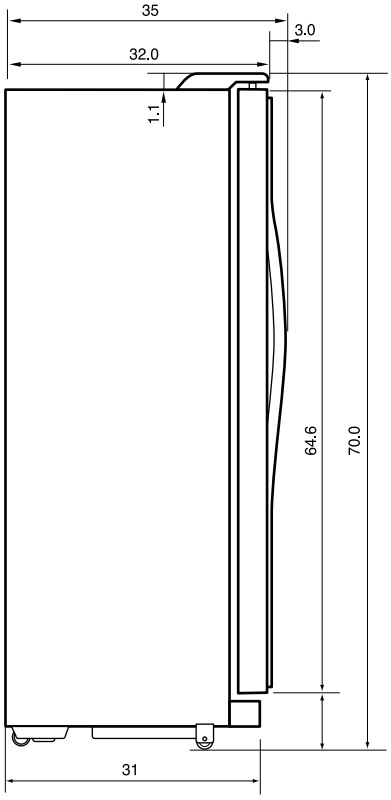

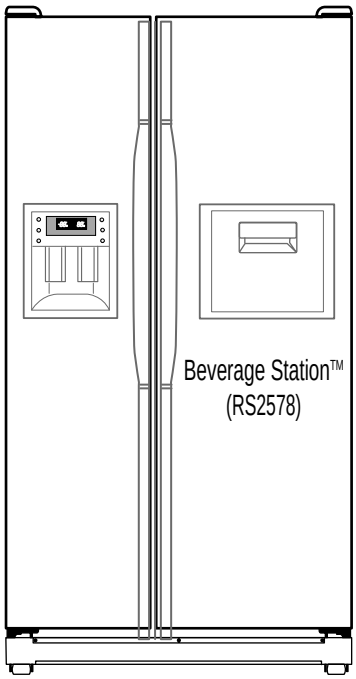

7. Refrigeration Cycle and Cool Air Circulation Route

7-1) Refrigerant Route in Refrigeration cycle

Compressor → Sub-condenser → Side Cluster Pipe(FRE) → Side Cluster Pipe(REF) → Hot Pipe
→ Dryer → Capillary Tube → Refrigerator Evaporator → Freezer Evaporator→ Suction Pipe → Compressor

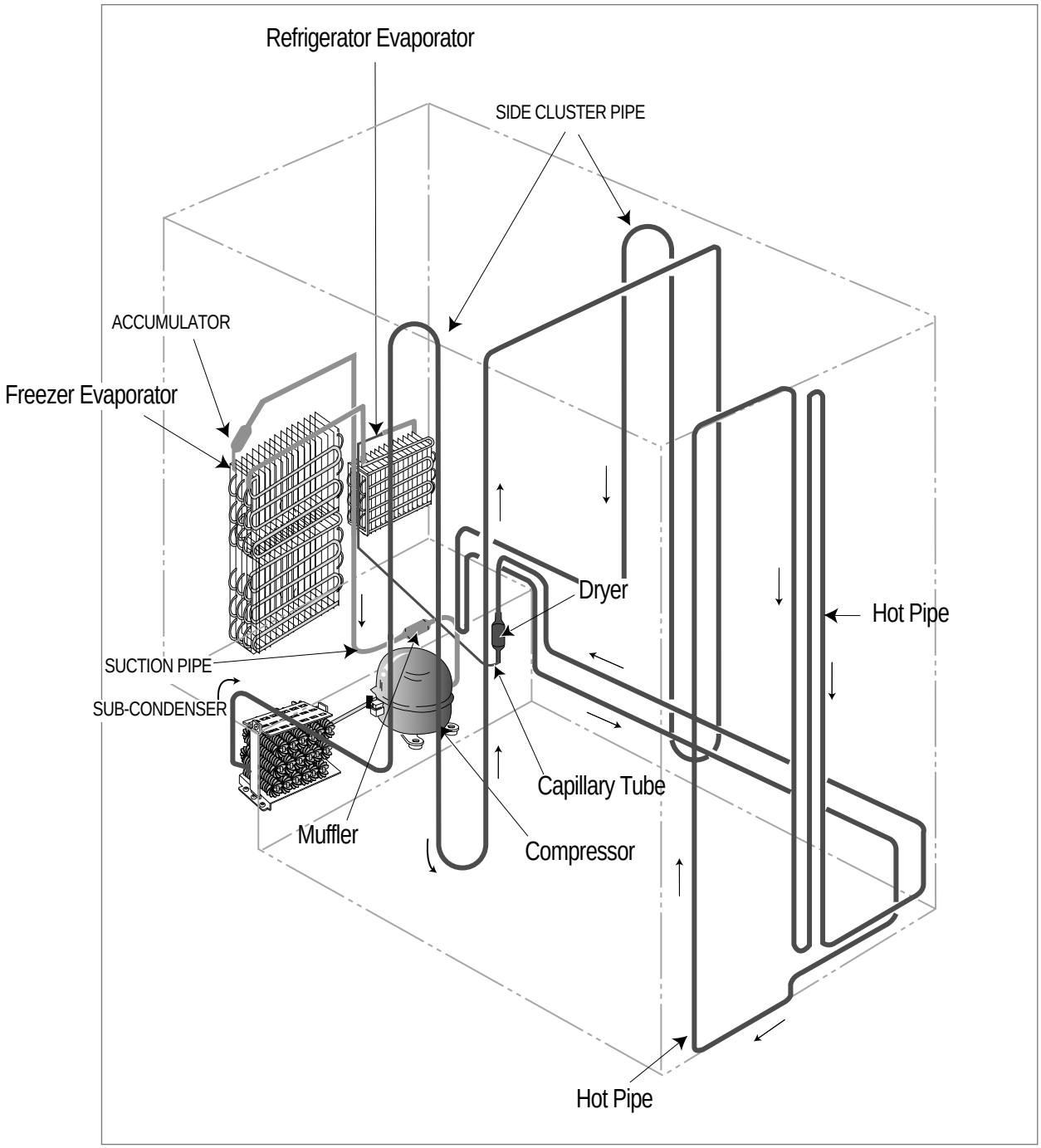

Refrigeration Cycle and Cool Air Circulation Route

7-2) Cool Air Circulation

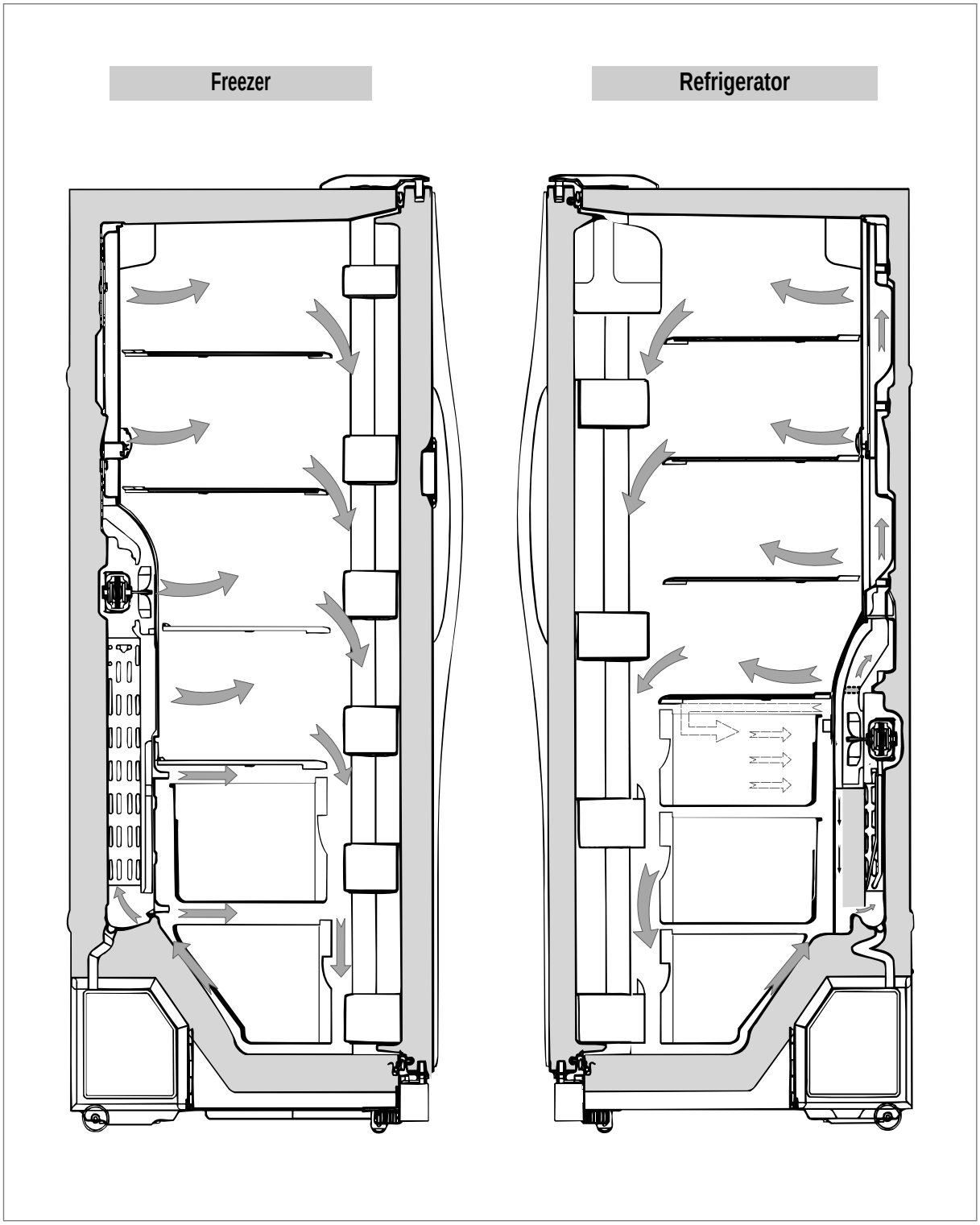

8. Mechanical Disassembly

8-1) Refrigerator Disassembly

Control Panel 14
Door Handle 14
Beverage Station™ 14
Door Gasket 14
Refrigerator Door Light Switch 15
Refrigerator Light 15
Tempered Glass Shelf 15
Plastic Drawers in Refrigerator 15
Gallon Door Bin 15
Water Filter 16
Evaporator Cover in the Refrigerator 16
Upper Ductwork 16
Evaporator Fan Motor 16
Evaporator in Refrigerator 17
Refrigerator Thermistor 17
CoolSelect Zone™ Thermistor 17

8-2) Freezer Disassembly

Door Bin in Freezer 18
Freezer Door Light Switch 18
Plastic(Wire) Drawer in Freezer 18
Freezer Shelf 18
Ice Dispenser & Ice Maker 18
Auger Motor Case 19
Freezer Light 20
Evaporator Cover in Freezer 20
Upper Ductwork 20
Evaporator Fan Motor 20
Evaporator in Freezer 21
Freezer Thermistor 21
Ambient Thermistor 21
Ice-Maker Thermistor 21

8-1) Refrigerator Disassembly

Machine Compartment & Electrix Box 22
Water Solenoids 22
Condenser Fan 22
Sub-condenser 22

8. Mechanical Disassembly

8-1) Refrigerator Disassembly

Control Panel

1. Insert a flat-blade screwdriver on the slot as shown, and unlock the tabs.
2. Disconnect the wire connector.

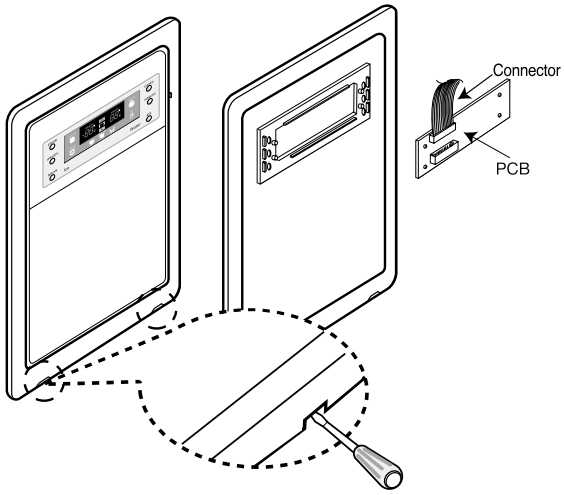

Door Handle

The door handles allow access into the refrigerator and freezer. They are front mounted with Phillips head screws.

1. With a small flat-blade screwdriver, press the small button and pull handle cover out.
2. Remove the Phillips screws (8).
3. Lift the handle with an in and upward motion until it disengages the locking tabs. Pull the handle outward to remove it.

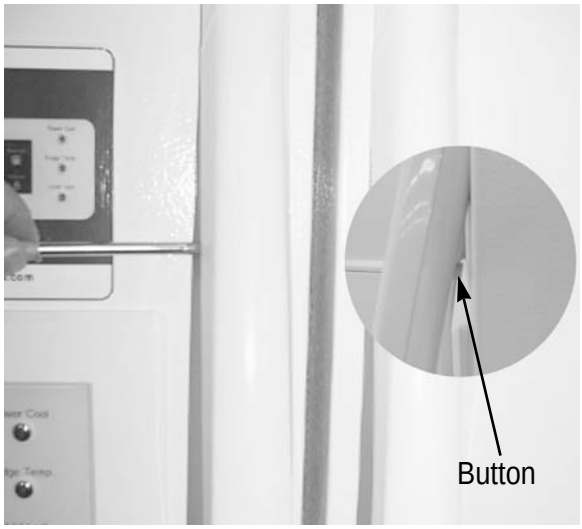

Beverage Station™

The beverage station™ allows access to the refrigerator without opening the refrigerator door.

1. Open the door beverage station™
2. With a small flat-blade screwdriver,take out the rubbercap, then put it into the small hole and push the button inside.
3. Take off its door.

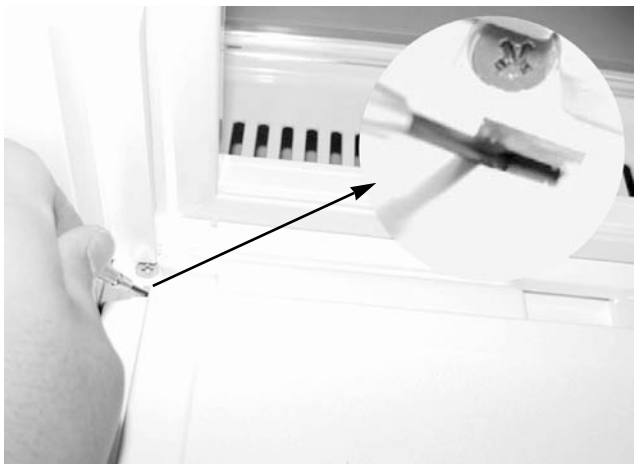

Door Gasket

The door gasket is a molded gasket set into a channel located in the door liner.

1. Open the door.
2. Grasp the gasket and pull in an outward motion until the molded gasket separates from the door liner.

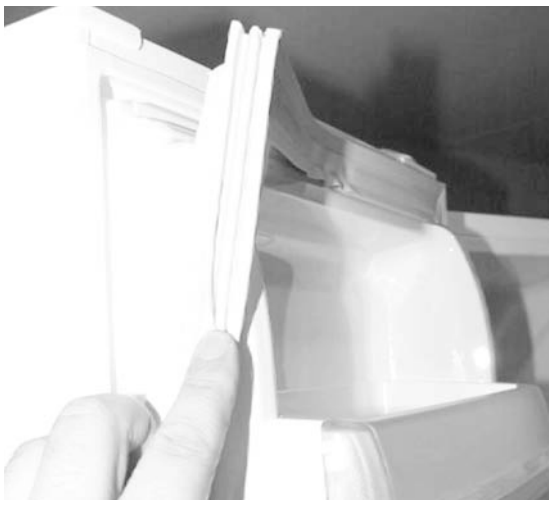

Mechanical Disassembly

Refrigerator Door Light Switch

The refrigerator has a door light switch located in the upper right corner for the refrigerator.

1. Use a small flat-blade screwdriver to unlock the locking tab and pull the switch out until the wire connector is visible.

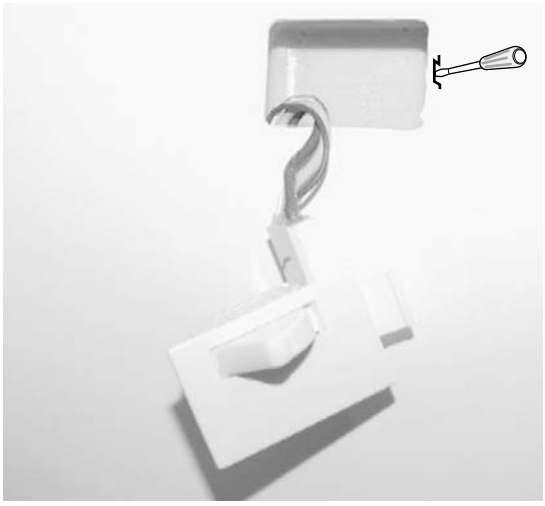

Refrigerator Light

The refrigerator lights are located in the upper and lower portion of refrigerator.

1. Pull out the screw cap and remove the screw.
2. To access the lower lights, pull out the screw cap and remove the screw.
3. Remove the lamp cover by unlocking the tabs and pulling the cover down.

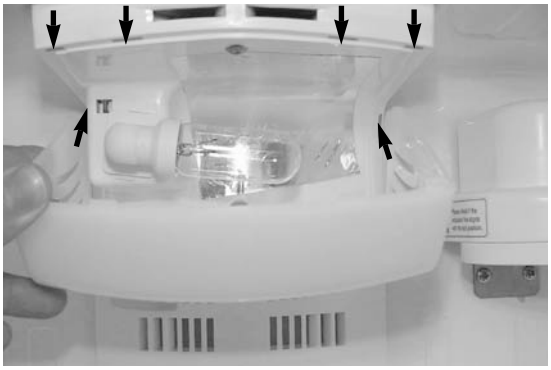

Tempered Glass Shelf

These shelves allow the storage of larger items and pull out for easy access.

1. Pull the shelf out as for as it goes.
2. Lift it up and remove it.



Plastic Drawers in Refrigerator

Drawers are designed for storage of fruits, vegetables, and deli items. The drawers are located in the lower portion of the refrigerator.

1. Pull out the drawer as far as it goes.
2. Tilt the drawer up and pull it out until it is removed.



Gallon Door Bin

The door bins allow storage of perishable items.

1. Push the bin up and slide it out.



Mechanical Disassembly

Water Filter

The water filter is located in the upper right-hand corner of the refrigerator. The water filter filters water for the ice maker and the water dispenser.

1. Turn the water filter 1/2 turn counterclockwise and pull it down.
2. To install the filter, align the indication mark (unlock position) and push it up while turning 1/2 turn clockwise until the lock position is aligned. Do not over tighten.



Evaporator Cover in the Refrigerator

1. Pull out the screw cap and remove the screw.
2. Remove the lamp cover by unlocking the tabs and pulling the cover down.
3. Remove the water tank from the evaporator cover by unscrewing the screws (2).
4. Remove the screws (6) at the evaporator cover and the two fixed screws of the wire connector cover.
5. Take off motor and lamp wire connector located on the upper liner.
6. Remove the duckwork of the evaporator fan in the direction of the arrow as shown.

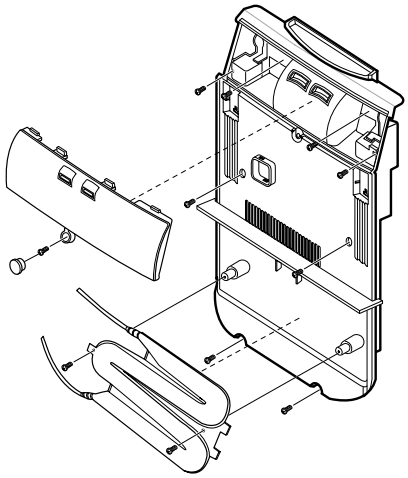

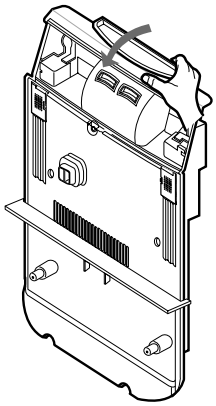

Upper Ductwork

1. Remove the screw caps (2) and screws (5).
2. Slide the upper fan ductwork out while disconnecting the wire connector(lamp and thermistor).

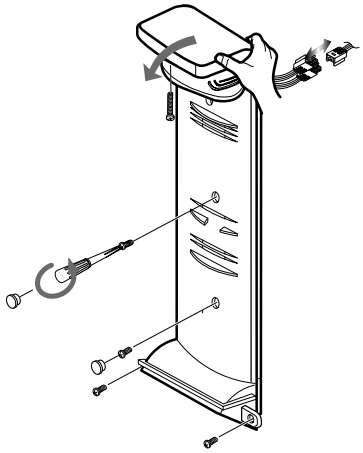

Evaporator Fan Motor

The evaporator fan is located in the middle rear of the freezer. This fan circulates cold air in the freezer.

1. Remove screws (4) located at the four corners of the fan bracket.
2. Take the fan motor assembly off.



Mechanical Disassembly

Evaporator in Refrigerator

Evaporator is located in the bottom of refrigerator.

1. Take off the ductwork in refrigerator.
2. Disconnect the wire connector.(Heater and Thermistor)
3. Desolder the capillary tube and the suction line from the evaporator.
4. Remove the evaporator.
5. With a file, score the capillary tube just upstream of the soldered point. Break off the soldered section to help prevent solder from plugging the tube during soldering.
6. Place a new evaporator and braze the suction and capillary tube to evaporator using silver solder.
7. Install a replacement dryer.
8. Evacuate and recharge the system using reasonable procedures.

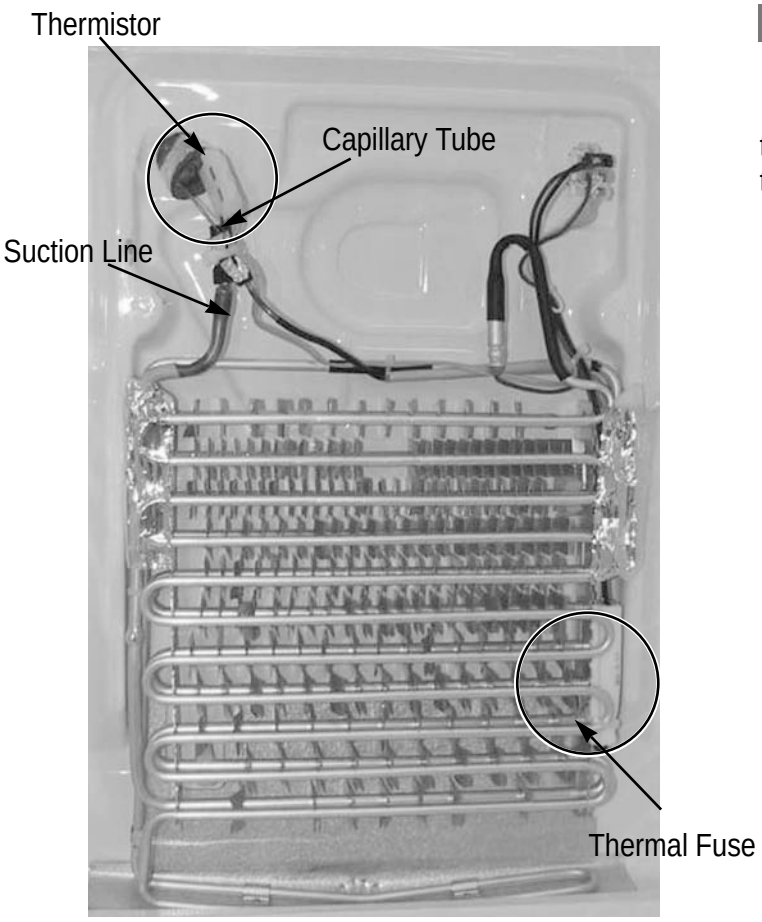

Refrigerator Thermistor

The refrigerator thermistor is located inside of the upper light cover of the refrigerator.

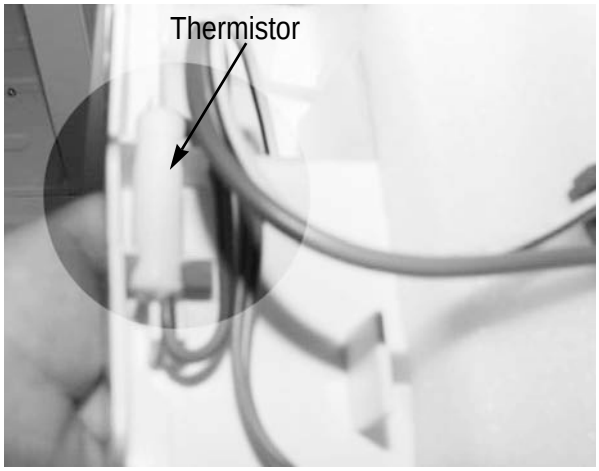

CoolSelect Zone™ Thermistor

The CoolSelect Zone™ thermistor is located outside the back of CoolSelect Zone™ drawer. The temperature signal sends the micro-processor.

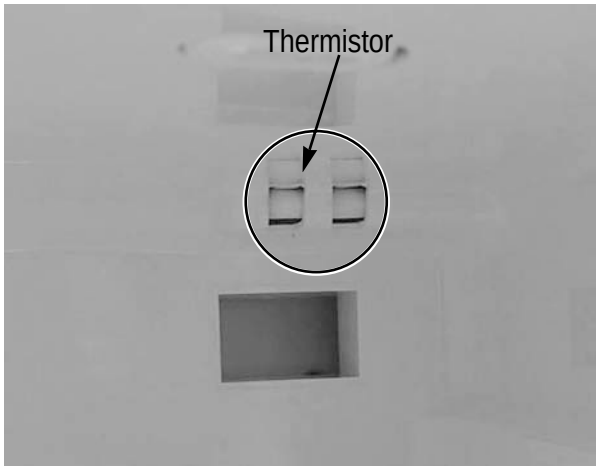

8-2) Freezer Disassembly

Door Bin in Freezer

The door bins allow storage of perishable items.

1. Push the bin up and slide it out.



Freezer Door Light Switch

This switch is located in the left-hand portion of the freezer and sends a signal to the processor.

1. With a small flat-blade screwdriver, unlock the locking tabs and pull the switch out until the wire connector is visible.
2. Disconnect the wire connector and remove the switch.

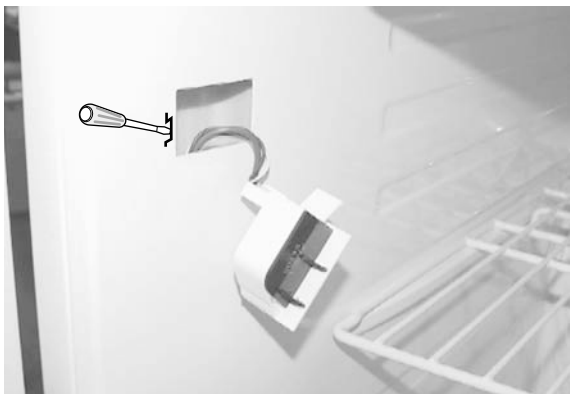

Plastic (Wire) Drawer in Freezer

Drawers are designed for storage of meat and dry foods. The drawers are located in the lower portion of the freezer.

1. Pull out the drawer as far as it goes.
2. Tilt the drawer up and pull it out until it is removed.



Freezer Shelf

The shelves slide out for easy access for frozen items.

1. Slide the shelf out until it reaches its stop.
2. Tilt down and slide it out of the compartment.



Ice Dispenser & Ice Maker

The ice dispenser is located in the upper portion of the freezer. This assembly stores ice made by the icemaker and dispenses ice.

1. Lift the ice bucket up ① and slide out the ice dispenser assembly ②.



The ice maker is located inside of the ice dispenser assembly.

1. Remove ice maker support screws (2), and slide out.
2. Disconnect the ice maker wire connector.
3. Unlock the locking tabs to separate the ice maker kit.

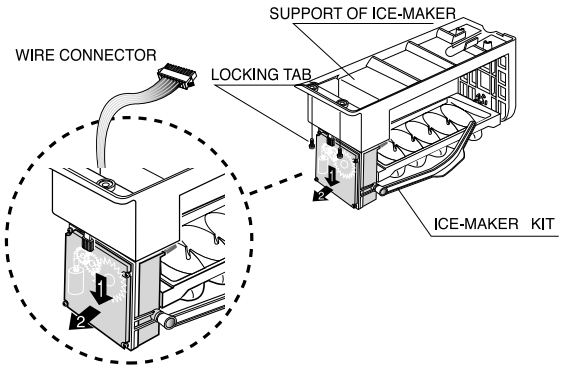

In order to assemble the icemaker kit.

1. Assemble the geared motor shaft and the front of ice tray.
2. Lift the front locking tab and assemble the ice maker kit.
3. Connect the ice maker wire connector.
4. Match the tab holes and tabs(2) located on the top of the liner, and slide the ice maker in.
5. Tighten the screws (2) of the ice maker support.

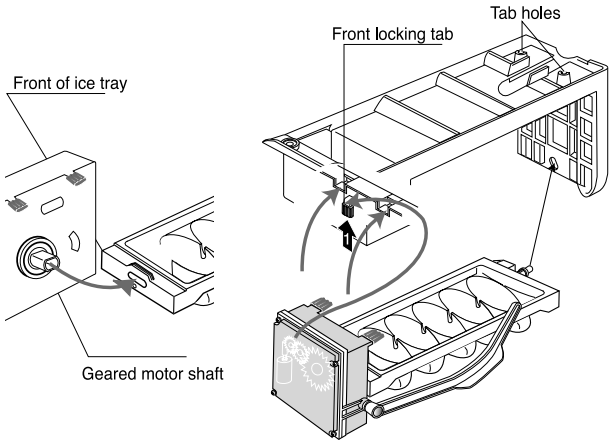

Auger Motor Case

This shelf is designed to support the ice maker & ice dispensed and Xtra Space™.

1. Remove the Xtra Space™ cover to push it down and pull front.
2. Slide the partition out.
3. Remove the screws (2) on the bottom front of the case.
4. Slide out the case while disconnecting the wire connect.

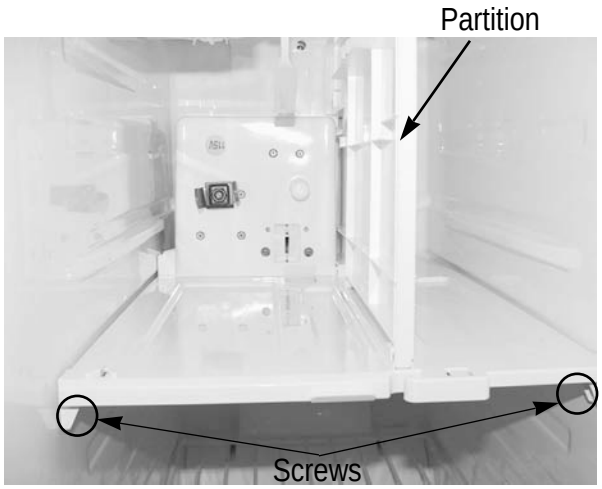

Mechanical Disassembly

Freezer Light

The freezer light is located in the bottom of the auger motor case. The light is covered by an opaque cover.

1. Remove the screw and the light cover.



Evaporator Cover in Freezer

1. Pull out the screw caps and remove screws (6).
2. Remove the ductwork of the evaporator fan in the direction of the arrow as shown.
3. Disconnect the wire connector.

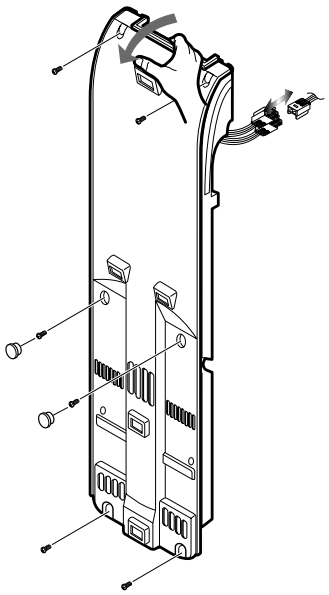

Upper Ductwork

1. Remove the screw cap and screw.
2. Slide the upper fan ductwork out while disconnecting the wire connector (Lamp and Thermistor).

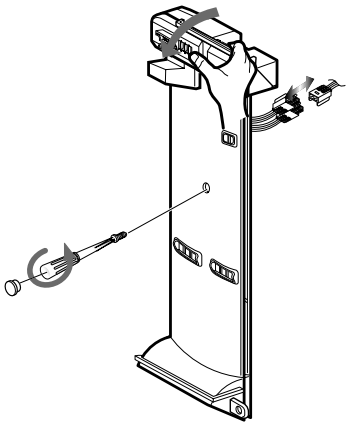

Evaporator Fan Motor

The evaporator fan is located in the lower rear of refrigerator. This fan circulates cold air in the refrigerator.

1. Remove screw(4) located at the four corners of the fan bracket.
2. Take the fan motor assembly off.



Mechanical Disassembly

Evaporator in Freezer

Evaporator is located in the bottom of freezer to produce cold air driven across the evaporator coils.

1. Take off the ductwork in Freezer.
2. Disconnect the wire connector (Heater, Bimental, and Thermistor).
3. Desolder the inlet and outlet tubes.
4. Remove the evaporator.
5. Take the same steps to seal the system as mentioned earlier.

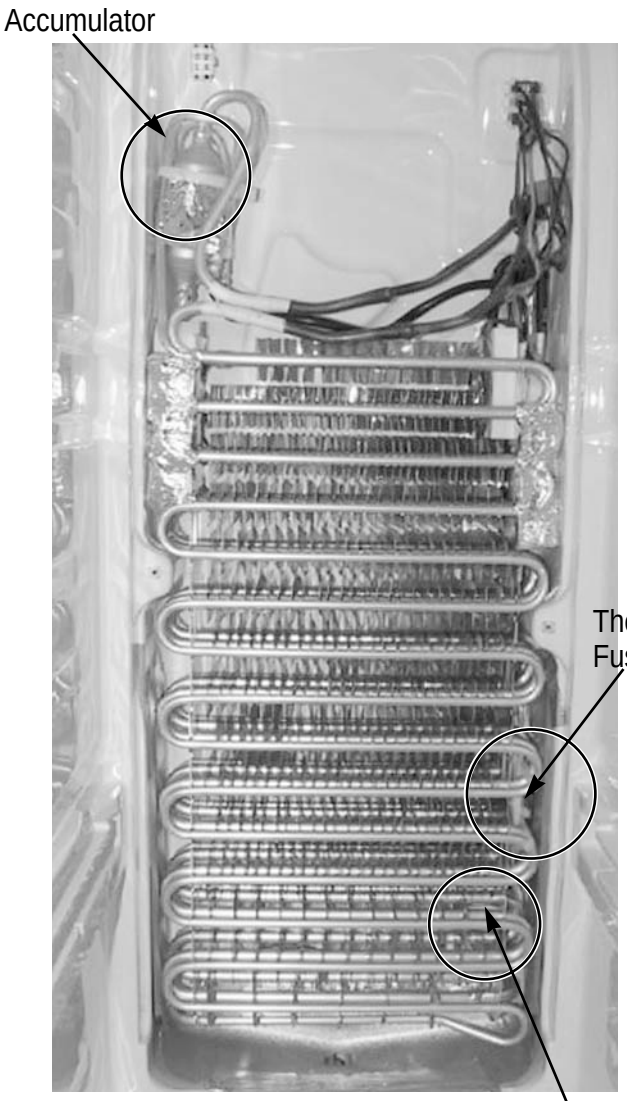

Freezer Thermistor

The freezer thermistor is located at the top left of freezer vent. It sends temperature signals to the micro-processor.

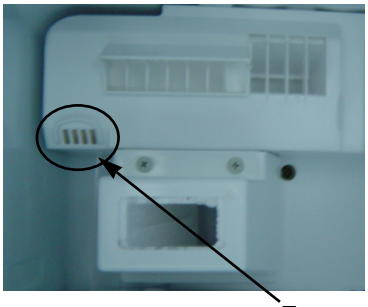

Ambient Thermistor

The ambient thermistor is located inside the upper hinge cover. It sends temperature signals to the micro-processor.

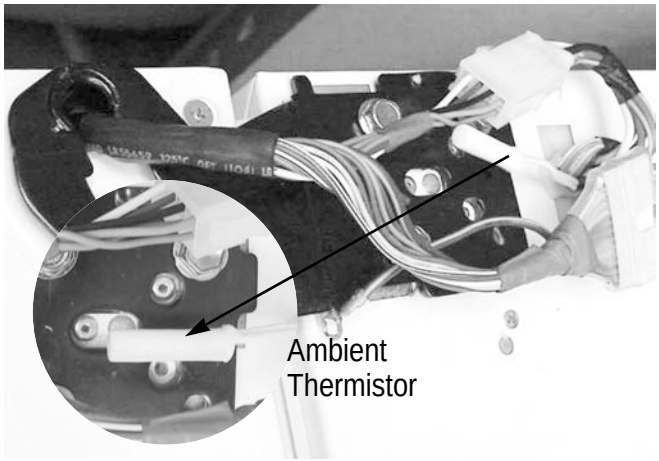

Ice-MakerThermistor

The Ice-Maker thermistor is located in its bottom. The temperature signal sends the micro-processor.

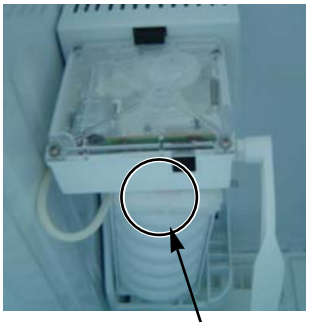

8-3) Machine Compartment Disassembly

Machine Compartment & Electric Box

1. Disconnect the power cord of the refrigerator.
2. Remove the fixed screws (6) of compressor cover.

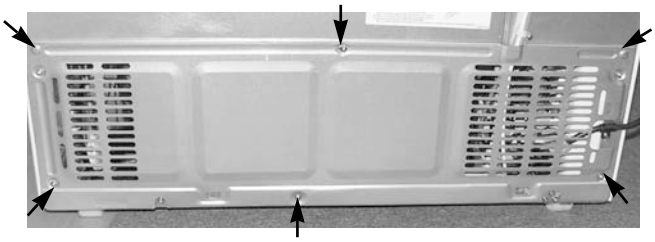

3. Slide up and take off the compressor cover to see the machine compartment.

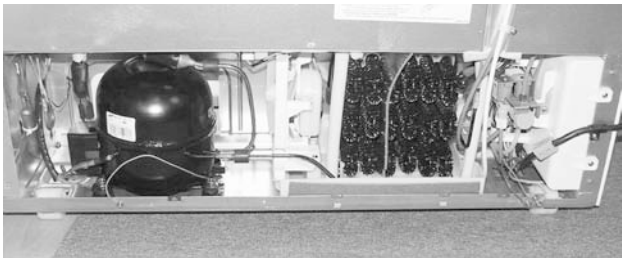

4. Press the tab in electric box cover to take out by using a flat-blade screw driver.

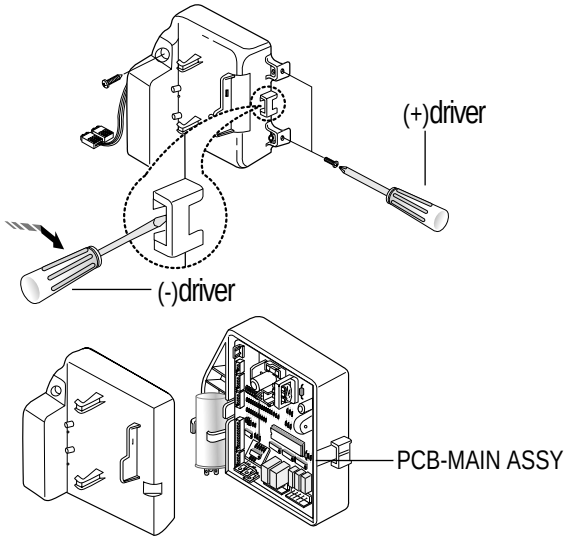

Water Solenoids

When the solenoids receive a signal from the micro-processor, they supply water to the water dispenser or the ice maker.

1. Remove bracket screw (1) on electric box.
2. Take the solenoids assembly out.
3. Disconnect water tubes (3).

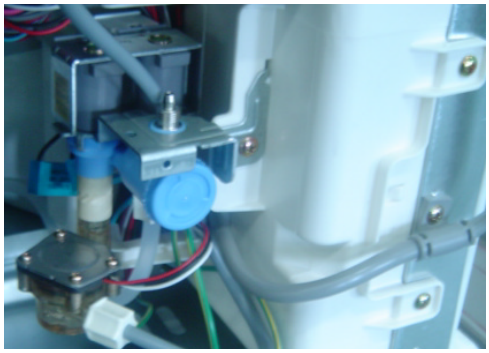

Condenser Fan

The condenser Fan is located in the middle of machine compartment. It cools down the sub-condenser and the compressor.

1. Disconnect the condenser fan wire.
2. Remove screw (1) on the drain water tray.
3. Take the condenser fan assembly off.

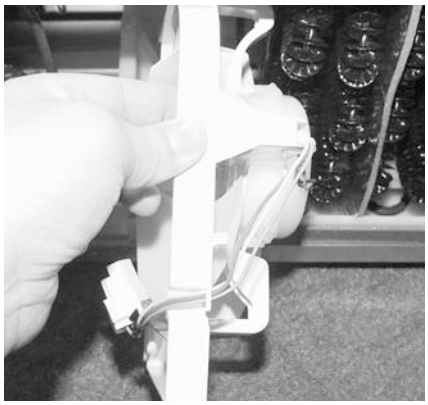

Sub-condenser

The sub-condenser is located in the machine compartment. The heat is extracted by condenser fan.

1. Desolder the compressor discharge & the sub-condenser outlet.
2. Take out the sub-condenser.

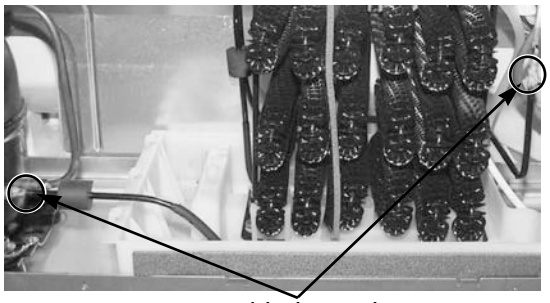

Desoldering Point

9. Operation Function

9-1) Digital Panel 24

9-2) Temperature Control Function 24

9-3) Power Freeze and Power Cool Functions 25

9-4) Child Lock Function 25

9-5) Ice & Water Dispenser Function 26

9-6) C-Fan Motor Delay Function of the Machine Compartment 26

9-7) CoolSelect Zone™ Function(RS2556, RS2578) 26

9-8) Water Filter Indicator Function 27

9-9) Ice-Maker Function 27

9-10) Defrost Function 29

9-11) Forced Operation Function (Pull-down/R-Defrost/R,F-Defrost/Cancellation) . 30

9-12) Sound Function 31

9-13) Exhibition Function 31

9-14) Self-Diagnostics Function 31

9-15) Load Operation Check Function 33

9-16) Restoration Function for Power Outage 33

9-17) Set Point Shift Function 33

9-18) Table of Set Point Shift Function 34

9. Operation Function

9-1) Digital Panel

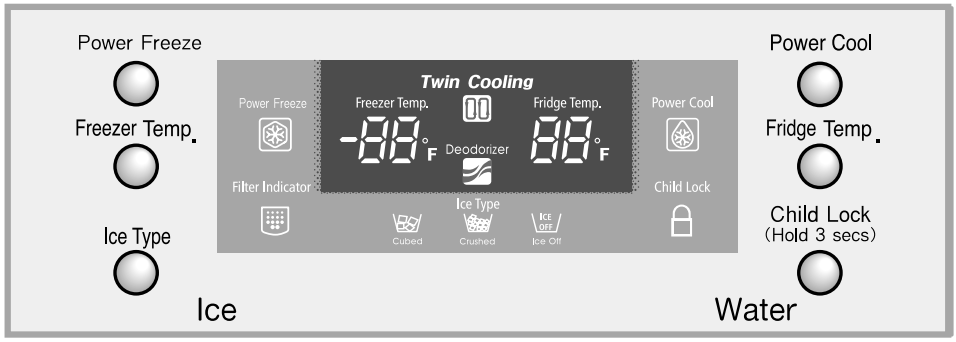

for **RS2534**

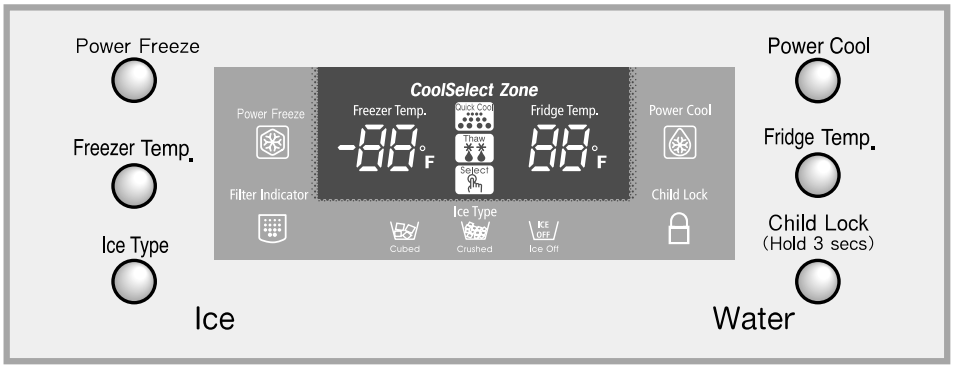

for **RS2556**
RS2578

9-2) Temperature Control Function

When the system power is initally engaged, the default set temperature are -4˚F for the freezer and 38˚F for the set refrigerator, respectively. The numbers shown on the digital display panel stand for the actual compartments temperatures. When the compartment temperatures go down, so do the numbers on the display panel, and finally they reach the set temperatures. Once the system is stabilized, the display temperatures are the set temperature.

1) Freezer Temperature Control.
   To select a set temperature, press the Freezer Temp. button. The display shows the set temperature from -14˚F to 8 ˚F in sequence.
2) Quick Ice Freezer Temperature Control
   Interior Temperature of the freezer will be controlled with -14 degrees Fahrenheit until the ice bucket is filled up with ice cubes. When the ice bucket is filled up with ice cubes, the freezer will run with original set temperature. Also, whenever the ice bucket is released from being filled with ice cube, the freezer will repeat to be controlled with -14 degrees Fahrenheit. But if you select "Ice Off, the freezer always will be controlled with original set temperature.
3) Refrigerator Temperature Control.
   To select a set temperature, press the Fridge Temp. button. The display shown the set temperature from 34˚F to 46˚F in sequence.

note) Because of the temperature sensor sensivity, the refrigerator can be under and/or over cooled when the air flow is blocked by stored foods. (Temperature range of the sensor : 15˚F～80˚F)
In the event of a power failure, if the freezer temperature is maintained lower than 41˚F, the last selected set temperature and functions memorized in EEPROM will be restored when the power is on.

Operation Function

9-3) Power Freeze and Power Cool Functions

- Select the Power Freeze or Power Cool buttons separately.
- These buttons are toggled ON and OFF and the indicators as well.
- Although you select Power Freeze or Power Cool, the set temperatures in the freezer and refrigerator are not changed.
- The set temperatures for the compartments can be changed while these functions are in use.

1) Power Freeze function
   1-1) When you press the Power Freeze button, the LED indicator lights right away, but there is 10 seconds lag time to an actual operation. When this button is pressed again, the Power Freeze function stops and the indicator is off immediately .
   1-2) If you select Power Freeze, both the compressor and the freezer fan run for 2.5 hours continuously.
   1-3) During Power Freeze, the freezer retains the current settings.
   1-4) When Power Freeze expires, the indicator goes off and the freezer set temperature will be restored.

2) Power Cool function
   2-1) Power Cool operation and the indicator work exactly same as the Power Freeze function.
   2-2) When Power Cool is selected, COMP and Refrigerator Fan operate continuosly until the refrigerator reaches 25°F. This function will be terminated after 2 ½ hr running.

3) When you select Power Freeze and Power Cool together
   Each function works at the same time. The COMP and Freezer Fan run continuously and the Refrigerator Fan runs until 25°F in the refrigerator.

4) Initial Power-On
   4-1) When the freezer and the refrigerator temperatures are higher than 14°F and 50°F, respectively, if Power Freeze is selected, then the Refrigerator Fan will be off. If Power Cool is selected, then the Freezer Fan will be off.
   4-2) When both functions are selected, there is no benefit of fast cooling for each compartment.

9-4) Child Lock Function

- When the child lock button is pressed for 3 seconds, the child lock indicator is on with an audible tone.

  -When it is locked, no function commands except the Ice type button will be accepted.

  -This function will prevent accidental setting that may be caused by children or pets.

  -To unlock the setting functions, press this button for 3 seconds again.

9-5) Ice & Water Dispenser Function

- Among several ice-maker functions, the ice extraction function is performed by mechanical system. Only the relay control for a cubed-ice dispensing and the SSR control for the ice chute door are performed electronically.

1) Select Cubed/Crushed/Ice-off function
1-1) The Ice Type button selects Cubed/Crushed/Ice-off options in sequence.
1-2) A default setting is Cubed option.
1-3) If Cubed ice is selected, the Crushed ice bypass solenoid and the geared motor will allow Cubed ice to by pass the ice Crusher.
1-4) If Ice-off is selected, the ice maker will stop working. This option will be terminated when Cubed and Crushed options are selected.

Note) When the Ice-off indicator is on, only Cubed ice will be dispensed from the ice bucket.

1-5) The ice chute door must remain open for 5 seconds after dispensing ceases. After this 5 seconds delay, SSR will be controlled to shut the ice chute door.

Caution) Do not force to close the ice chute door. Try to dispense some more ice again to work it automatically.

2) Water Dispenser function
2-1) To dispense water, depress the water dispenser lever located in the dispenser recess.
2-2) When the lever is depressed, the water solenoid valve located in the machine compartment is open to flow water.
2-3) There is no electronic control function for this option.

9-6) C-Fan Motor Delay Function of the Machine Compartment

- According to the ambient temperature, the condenser fan located in the machine compartment is operated with different modes.

	Ranges of ambient temp.	Operation
Condenser Fan Delay function	Above 66˚F	Condenser-Fan is ON as soon as the compressor is on.
	61˚F ~ 65˚F	Condenser-Fan is ON with 5 minutes delay from the compressor on.
	Below 60˚F	Condenser-Fan is OFF regardless of the compressor operation.

9-7) CoolSelect Zone™ Function (RS2556,RS2578)

- To select this function, open the refrigerator door and press the button on the control panel of CoolSelect Zone ™ drawer.
- When the CoolSelect Zone™ function is selected, the damper inside fan ductwork is open. So the refrigerator cooling is performed first, then the damper is closed to control the CoolSelect Zone™ temperature.

Operation Function

1) Select function
1-1) Using Select button, Cool, Chill(30˚F), and Soft Freeze(23˚F) options can be selected in sequence. Cool option maintains a set temperature of the refrigerator.

2) Quick Cool function
2-1) If the Quick Cool is selected, LEDs will flash 60 and Min. The count will be decreased in every minute.
2-2) To cancel this function, press Quick Cool button again or Thaw button or Select button. Otherwise, it will be terminated 60 minutes later automatically.
2-3) After this function ends, this drawer will come back to Cool option.
2-4) A defrost cycle will be postponed until Quick Cool option is finished.

3) Thaw function
3-1)When the thaw button is pressed, LEDs will flash 4, 6, 10, and 12 in sequence and Hr.
3-2) The count will be decreased in every hour.
3-3) A cancellation of this function is same as Quick Cool function.
3-4) After this function ends, this drawer will be maintained with 30˚F.
3-5) While the compressor is on, this drawer retains a certain temperature and while the compressor is off, the defrost heater is activated and Refrigerator Fan is on with a closed position of the damper.

9-8) Water Filter Indicator Function

1) Filter Indicator
1-1)This indicator initally lights in green. The light color will be changed to orange after 5 month operation then to red at the 6th month. The EEPROM in the control board counts a period of time regardless of a power failure.
1-2)To reset the counter and the light color, press Ice Type button and Child lock button for 3 seconds simultaneously.
1-3)If these two buttons are pressed simultaneously for 5 seconds, this function will cease.
1-4)To restore this function, press these buttons again for 3 seconds.

9-9) Ice-Maker Function

- The Ice-maker is referred to the device with an automatic ice production, storage in the ice bucket and dispensing through the ice chute.

1) Ice-maker parts

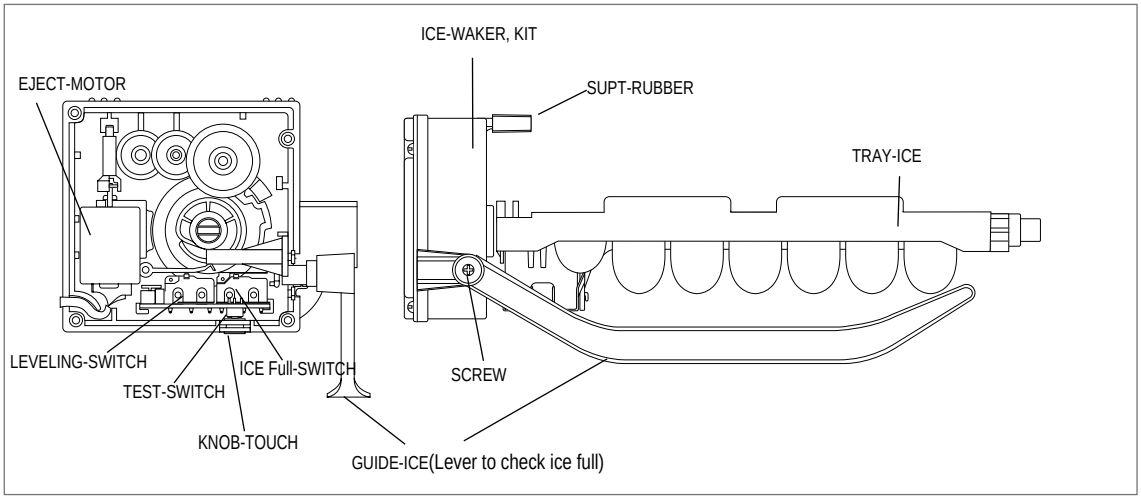

Operation Function

2) Preparation of Ice-maker

2-1) Connect the water line to the water supply valve of refrigerator to supply water. (See how to connect a water supply line in the owner's manual.)

2-2) Push the bucket back fully so that the guide-ice of ice maker should not touch the back of bucket. (If the back of bucket touches the guide-ice of ice maker, the ice maker will not make ice any more because of a ice full signal.)

2-3) It takes 6 hours to harvest a first ice, and throw away 2-3 times of these ice to make sure the supplied water clean.

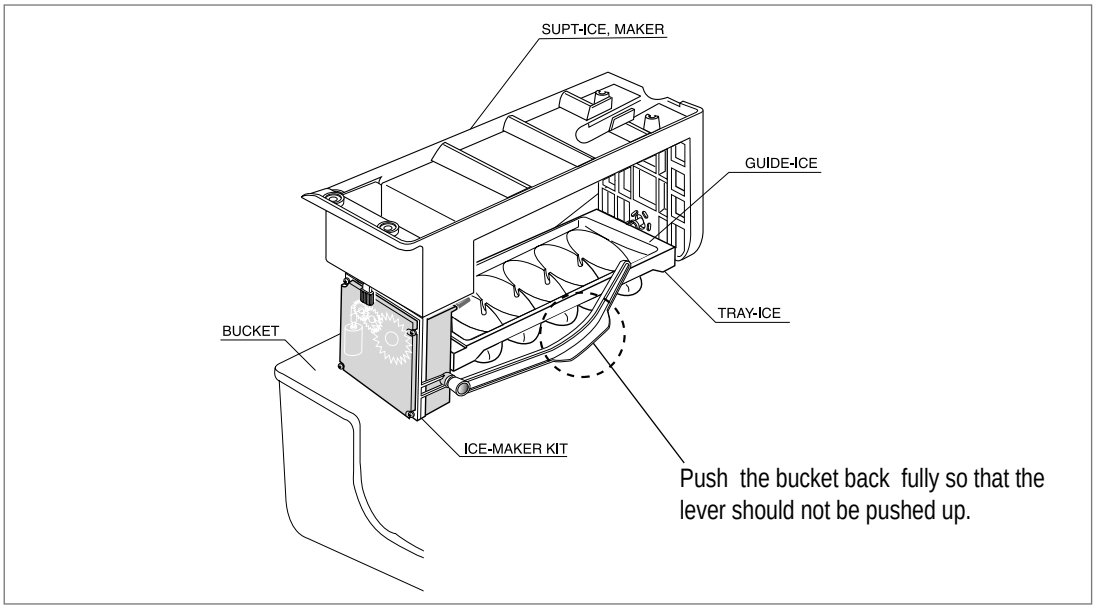

1) Initial Operation function

1-1) Whenever the power is on, the control board checks the ice tray leveling with the leveling switch within 2 seconds.

1-2) If the leveling switch is not off position, the geared motor will turn to the initial position to make the ice tray leveled.

1-3) When the ice tray is leveled, it will remain this position for 2 hours (1 cycle time for ice production).

1-4) After 2 hours, the sensor located under the ice tray will measure the tray temperature. If the temperature is maintained lower than 1℉(When ambient temperature is higher than 82℉,5℉) for 5 minutes, and the ice full switch is off position, the ice tray twisting process will begin.

<Reference table>

Leveling S/W	Ice full S/W	Judgement	Remark
ON("LOW")	ON("LOW")	Not ready	· MICOM Port PIN #51: Leveling PIN #51: Ice full · Port level OFF : 4.5V ↑ ON : 0.5V ↓
ON("LOW")	OFF("HIGH")	Not ready	
OFF("HIGH")	ON("LOW")	Not ready(Ice bucket with full of ice)	
OFF("HIGH")	OFF("HIGH")	Ready	

2) Water Supply function
2-1) When the ice tray is levelled again after ejecting ice, the water solenoid value will be controlled to supply water by time check basis. (See the "Time to supply water" Table)

3) Ice production
3-1) After 50 minutes pass from the water supply, the control board will check the temperature.
3-2) If the sensor reads the temperature lower than 1℉(5℉) for more than 5 minutes, than the ice production process is completed.

4) Test function
- In order to operate a test function, press the knob (Test Switch) for 1.5 second.
- This function can be used to check a proper working, to clean the ice tray, and to adjust the water level in the ice tray.

4-1) This function only works when the ice tray is leveled and the ice full signal is cleared.
4-2) When the water line is connected, each process such as a water supply, ejection, and leveling, can be investigated by this button.

5) Ice off function
5-1) When the Ice off option is selected by Ice Type button, the ice making process will cease.
5-2) When the ice making process ceases, the final state will be the ice tray with supplied water.
5-3) When Cubed or Crushed option is selected again, the control board will check an accummlated time period. After making it 50 minutes and when the ice tray temperature is acceptable, ice ejection process will begin.

6) Functions when the freezer door is open
- When the freeze door is open, all ice maker related processes will cease in order to minimize noise and to prevent ice from dispensing.

6-1) The ice tray stops moving regardless of the position.
6-2) The water supply process remains working as usual.
6-3) If the ice tray is in the middle of ice ejecting process, close the freezer for 30 seconds and check if the tray is leveled. If it is not leveled, it must be out of order.

9-10) Defrost Function

1) A defrost is determined based on the accumulated compressor on-time.
2) When the power is engaged for the first time, the defrost cycle for the freezer and the refrigerator will begin after 4 hours of the accumulated compressor on-time.
3) A defrost interval depends on the ambient temperature, the number of door openings, and the door open time.
4) A minimum interval is 6 hours and a maximum is 8 hours for the refrigerator, and 12 hours and 16 hours for the freezer, respectively.
5) The defrost heater on-time is determined by the defrost sensors as follow :

	Refrigerator	Freezer
Heater ON	Below 50℉	-
Heater OFF	63℉	50℉

9-11) Forced Operation Function (Pull-down / Refrigerator Defrost / Refrigerator . Freezer-Defrost / Cancellation)

- This function enables a pull-down mode, a defrost mode for the refrigerator only, a defrost mode for the freezer and the refrigerator at the same time, and a cancellation of this function.
- Press Power Freeze and Fridge Temp. buttons for 8 seconds simultameously to get in the ready mode for a forced operation.
- The display panel will return to normal after 20 seconds in the ready mode.
- At the ready mode, press any button(except Ice Type and Child Lock) once to start a pull-down operation, twice for a defrost cycle for the refrigerator, three times for a defrost cycle for the freezer and the refrigerator, and finally four times for cancellation of this function.
- Another way to cancel this function is to simply plug out and in the power cord.

Press both button for 8 seconds at the same time.

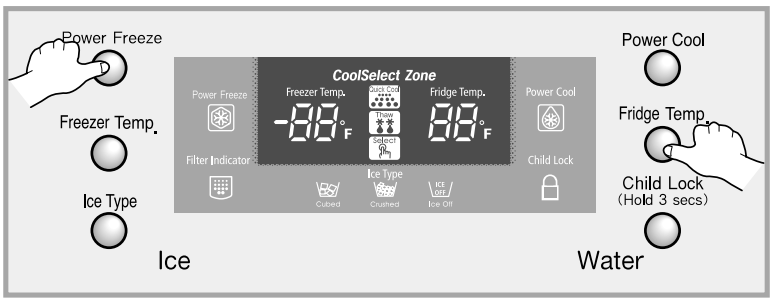

1) Pull-down Operation

1-1) At the ready mode, press any button once then the buzzer will beep (ON for 1/2 second and OFF for 1/2 second) until this mode is cancelled.

1-2) At this pull-down mode, the compressor will start immediately (No 5 minute delay) and if the system is in the defrost cycle, it will be cancelled right away.

note) If this pull-down mode begins right after the compressor was off, the compressor may not start to run due to an overload condition.

1-3) At this mode, the compressor and freezer fan will operate continuously for 24 hours and the refrigerator fan will be on and off according to the set temperature(34˚F)

1-4) After 24 hour operation, the system will be cycled at -14˚F for the freezer and 34˚F for the refrigerator.

1-5) In order to cancel this mode at any time, select the next mode on the ready mode or power off the system.

2) Defrost operation

2-1) At the pull-down mode, press any button again on the ready mode to begin the defrost cycle for the refrigerator.

2-2) The beep sound continues for 3 second at the beginning, then ON for 3/4 seconds and OFF for 1/4 second until this mode cease.

2-3) After this operation, the system will come back to normal operation.

2-4) At this mode, press any button again on the ready mode to operate the defrost cycles for both compartments.

2-5) The beep sound continues for 3 seconds at that time, then ON for 1/4 second and OFF for 3/4 seconds until the defrost operation cease.

3) Cancellation

3-1) At the R,F-Defrost mode, press ant button again on the ready mode to return to a normal operation.

3-2) Simply unplug the power cord, then plug it again to return to a normal operation.

Operation Function

9-12) Sound Function

1) Sound function
1-1) To make sure a command input, whenever a button is pressed, a "ding-dong" sounds.
1-2) When two or more buttons are pressed simultaneously or if a wrong button is pressed, there is no sound.

2) Door Open Alarm
2-1) When the doors remain open for 2 minutes, there are 10 times beeps.
2-2) If the doors continue to remain open more than 2 minutes, the additional 10 beeps interval will change to 1 minute.
2-3) The beeps will cease immediately when the doors are closed.

9-13) Exhibition Function

- This function is for a display purpose on the floor of show room or store.

1) Mode ON/OFF
1-1) For the exhibition mode, press Power Freeze and Freezer Temp. buttons simultaneously for 8 seconds until a "ding-dong" sounds.
1-2) Press the same time buttons again for 8 seconds to cancel this mode put with a "ding-dong" sound.

2) Operation
2-1) Most of the system function except the compressor operation are working properly.
2-2) There is no defrost cycle in this mode.

9-14) Self-Diagnostics Function

1) Self-Diagnostics in the initial Power ON
1-1)The control board performs a self diagnostics test within 1 second and check out the temperature sensors abilities.
1-2) If a sensor failure occurs, a corresponding LED segment will blink with a beep.
1-3) When a LED segment blinks, only the cancellation function (Press Power Freeze and Power Cool buttons simultaneously for 8 seconds) is acceptable.
1-4) After a replacement of bad sensor or a cancellation of this function, this self diagnostics will end.

2) Self-Diagnostics in the normal operation
2-1) To select this function, press Power Freeze and Power Cool buttons simultaneously for 8 seconds with an audible tone.
2-2) In the self diagnostic mode, only corresponding LED segments will be illuminated (see the check list on the next page)
2-3) After a 30 second illumination of error signal, the system will return to the normal operation.

Operation Function

∗ Self-diagnostics check list

NO	Error
①	ICE MAKER SENSOR
②	REFRIGERATOR SENSOR
③	REFRIGERATOR DEFROST SENSOR
④	REFRIGERATOR FAN ERROR
⑤	ICE MAKER function error
⑥	CoolSelect Zone™ SENSOR
⑦	REFRIGERATOR DEFROST ERROR
⑧	EXIT-SENSOR
⑨	FREEZER SENSOR
⑩	FREEZER DEFROST ERROR
⑪	FREEZER FAN ERROR
⑫	CONDENSER FAN ERROR
⑬	FREEZER DEFROST ERROR

Press both buttons simultaneously for 8 seconds

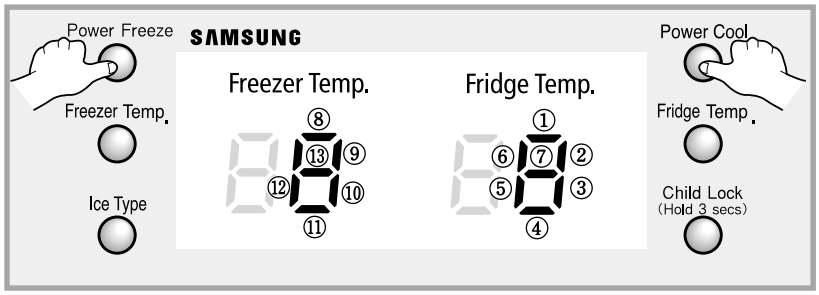

If any LEDs blink, the corresponding sensors and components must be checked for an error.

∗ Error items of self-diagnostics

NO	Error items	LED Display	Details	Remarks
01	ICE MAKER SENSOR	REF. SEGMENT	Ice Maker sensor connector missing; contact failure, electric wire cut, short-circuit; Ice Maker sensor failure; and so on	Indicate Error when the temperature sensed by Ice Maker sensor is higher than 150˚F or lower than –58˚F.
02	REFRIGERATOR SENSOR	REF. SEGMENT	Refrigerator sensor connector missing; contact failure, electric wire cut, short- circuit; Refrigerator sensor itself failure; and so on	Indicate Error when the temperature sensed by Refrigerator sensor is higher than 150˚F or lower than –58˚F.
03	REFRIGERATOR DEFROST SENSOR	REF. SEGMENT	Refrigerator evaporator internal defrosting sensor connector missing; contact failure, electric wire cut, short-circuit; sensor itself failure; and so on	Indicate Error when the temperature sensed by Refrigerator defrosting sensor is higher than 150˚F or lower than –58˚F.
04	REFRIGERATOR FAN ERROR	REF. SEGMENT	Refrigerator Fan motor operation failure; feedback signal line contact failed, electric wire cut, short- circuit; and so on	Indicate Error if the F and G signals generated by the FAN-motor operation are not input.
05	ICE MAKER function ERROR	REF. SEGMENT	Ice-ejector and level failed three times or more	
06	CoolSelect Zone™ sensor	REF. SEGMENT	CoolSelect Zone™ sensor connector missing; contact failed, electric wire cut, short-circuit; CoolSelect Zone™ sensor itself failed; and so on.	Indicate Error when the temperature sensed by CoolSelect Zone™ sensor is higher than 150˚F or lower than –58˚F.
07	REFRIGERATOR DEFROST ERROR	REF. SEGMENT	In the refrigerator room, if frost removal mode is finished due to limited time of 80 minutes. Error is displayed.	-
08	Ambient Air SENSOR	FREEZER SEGMENT	Air sensor connector missing; contact failure, electric wire cut, short-circuit; open air sensor itself failure; and so on	Indicate Error when the temperature sensed by the open air sensor is higher than 150˚F or lower than –58˚F.
09	FREEZER SENSOR	FREEZER SEGMENT	Freezer sensor connector missing; contact failed, electric wire cut, short-circuit;Freezer Room sensor itself failure.	Indicate Error when the temperature sensed by Freezer sensor is higher than 150˚F or lower than –58˚F.
10	FREEZER DEFROST SENSOR	FREEZER SEGMENT	Freezer evaporator defrosting sensor connector missing; contact failed, electric wire cut, short-circuit; sensor itself failure; and so on	Indicate Error when the temperature sensed by Freezer defrosting sensor is higher than 150˚F or lower than –58˚F.
11	FREEZER FAN ERROR	FREEZER SEGMENT	Freezer Fan motor operation failure; feedback signal line contact failure, motor's electric wire missing; and so on.	Indicate Error if the F and G signals generated by the FAN-motor operation are not input.
12	CONDENSER FAN ERROR (COMP-FAN)	FREEZER SEGMENT	Condenser Fan motor operation failure; feedback signal line contact failure, motor's electric wire missing; and so on.	Indicate Error if the F and G signals generated by the FAN-motor operation are not input
13	FREEZER DEFROST ERROR	FREEZER SEGMENT	In the freezer room, if frost removal mode is finished due to limited time of 70 minutes. Error is displayed	-

Operation Function

9-15) Load Operation Check Function

1) In the normal operation, press Power Freeze and Power Cool buttons simultaneously for 6 second, then the display panel will blink for 2 seconds.
2) Press Fridge Temp. button ⓐ to get into this check mode with an audible tone.
3) Each illuminating LED segment stands for the component which has an ouput signal from the control board.
4) This mode will terminate automatically after 30 seconds.

∗ Table of Load Mode Check List

NO	Contents
①	REFRIGERATOR FAN High or AC motor operation
②	REFRIGERATOR FAN Low
③	REFRIGERATOR DEFROST heater
④	Start mode
⑤	Overload mode
⑥	Low-temperature mode
⑦	Exhibition mode
⑧	COMPRESSOR
⑨	FREEZER FAN High
⑩	FREEZER FAN Low
⑪	FREEZER DEFROST Heater
⑫	CONDENSER FAN High
⑬	CONDENSER FAN Low
⑭	Dispenser-Heater
⑮	Damper
-	Normal condition

Press both buttons simultaneously for 6 seconds, all LED lights will be turned off. At this time press button ⓐ

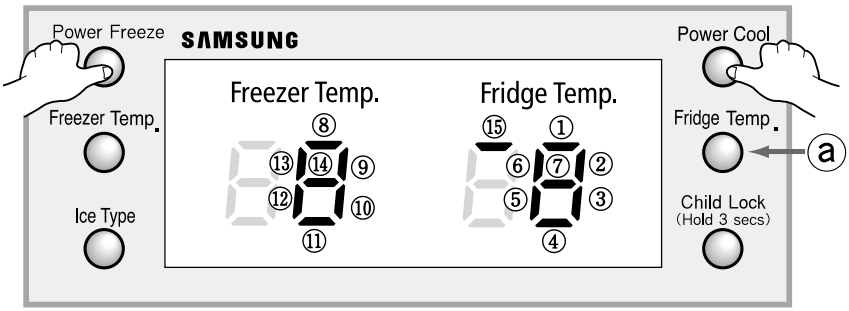

※ For the REFRIGERATOR FAN, only one rpm is applied for the current models, so that ① and ② show REFRIGERATOR FAN operation only.
※ The FREEZER FAN and CONDENSER FAN are operated to High/Low rpm automatically according to the operational condition.
※ ④⑤ and ⑥ only explain the system operation state according to the ambient condition

9-16) Restoration Function for Power Outage

1) When the freezer temperature is lower than 41˚F, all functions on the display panel will be restored.
2) When the freezer temperature is higher than 41˚F, all functions will be initialized.
(-4˚F for the freezer, 38˚F for the refrigerator, and Cubed for the Ice Type)

9-17) Set Point Shift Function

- Press Freezer Temp. and Power Cool buttons simultaneously for 12 seconds to get into this mode.
- In this mode, only the display LEDs for temperature will be ON.

Press both buttons simultaneously for 12 seconds

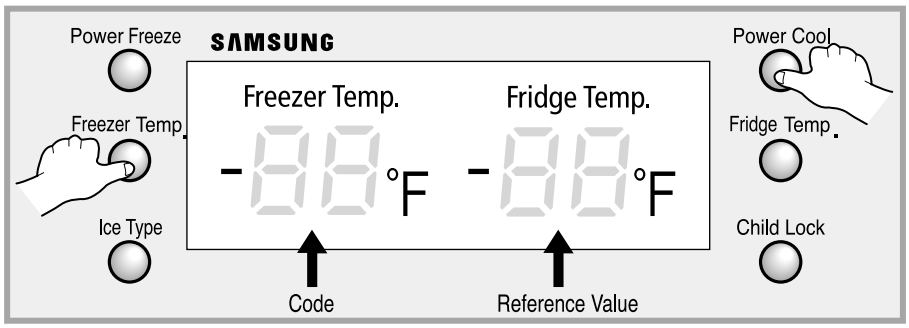

1) Initially, all products set the code, “0”

2) After 20 seconds from adjustment, a new setting will be stored in EEPROM and return to the normal display.

3) Freezer Temp, Fridge Temp., Ice maker water supply, Ice tray temperature, and CoolSelect Zone™ temperature can be adjusted with this function.

9-18) Table of Set Point Shift Function

1) Shift the freezer temperature sensor

Reference Value	0

Code	Temp. shift	Code	Temp. shift
0	0	8	1.0˚F
1	−1.0˚F	9	2.0˚F
2	−2.0˚F	10	3.0˚F
3	−3.0˚F	11	4.0˚F
4	−4.0˚F	12	5.0˚F
5	−5.0˚F	13	6.0˚F
6	−6.0˚F	14	7.0˚F
7	−7.0˚F	15	8.0˚F

Example) If you are lowering the current temperature of the freezer by −6.0˚F

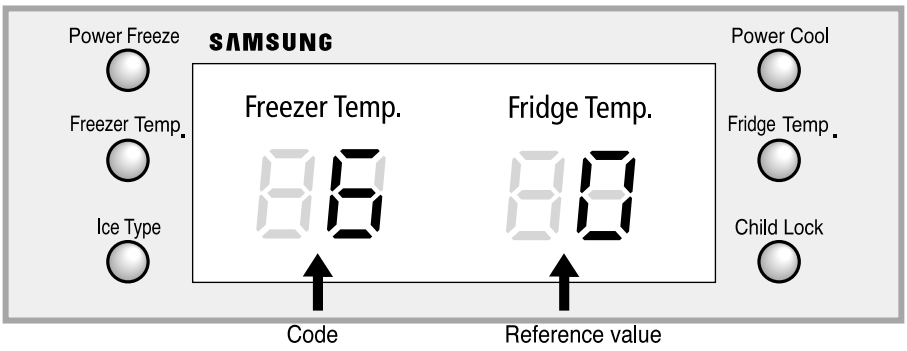

2) Shift the refrigerator temperature sensor

Reference Value	1

Code	Temp. shift	Code	Temp. shift
0	0	8	1.0˚F
1	−1.0˚F	9	2.0˚F
2	−2.0˚F	10	3.0˚F
3	−3.0˚F	11	4.0˚F
4	−4.0˚F	12	5.0˚F
5	−5.0˚F	13	6.0˚F
6	−6.0˚F	14	7.0˚F
7	−7.0˚F	15	8.0˚F

Example) If you are raising the current temperature of the refrigerator by +3.0˚F

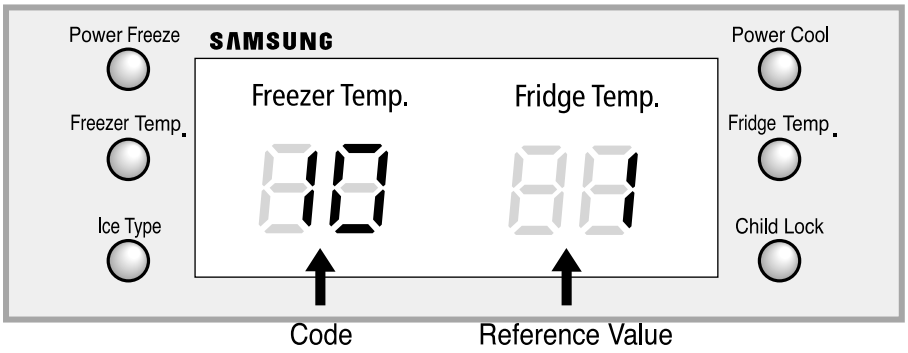

■ The following options is limited to a model with the Ice Maker.

3) Adjust the time to supply water for the ice maker

Reference Value	2

Code	Volume to supply water
0	85 cc
1	95 cc

4) Shift the Ice maker temperature sensor

Reference Value	4

Code	Ice maker temperature sensor	
	Ambient temperature is lower than 82˚F	Ambient temperature is higher than 82˚F
0	0˚F	5˚F
1	-0.5˚F	
2	-4˚F	
3	-7.5˚F	
4	5˚F	
5	10.5˚F	
6	14˚F	
7	17.5˚F	

5) Shift the CoolSelect Zone™ temperature sensor.

Reference Value	20

Code	CoolSelect Zone™ temperature sensor
0	0˚F
1	-1.0˚F
2	-2.0˚F
3	-3.0˚F
4	1.0˚F
5	2.0˚F
6	3.0˚F
7	4.0˚F

10. Circuit Descriptions

10-1) Source Power Circuit 38

10-2) Oscillator Circuit 38

10-3) Reset Circuit 38

10-4) Door S/W Sensing Circuit 39

10-5) Temperature Sensing Circuit 39

10-6) Key Scan and Display Circuit 40

10-7) CoolSelect Zone™ Panel Circuit 42

10-8) Fan Motor(BLDC) Drive Circuit 43

10-9) EEPROM Circuit 44

10-10) Option Circuit 44

10-11) Load Drive Circuit 44

Circuit Descriptions

10-1) Source Power Circuit

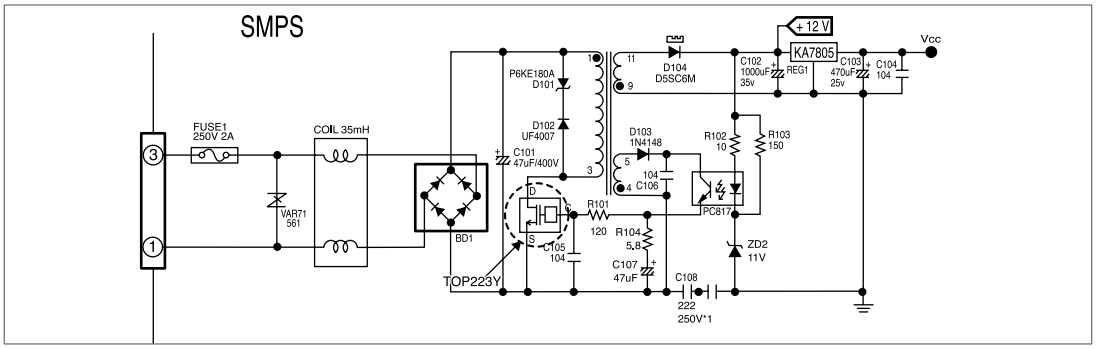

This circuit shows SMPS(Switch Mode Power Supply) which converts AC input voltage (115V, 60Hz) to a high DC voltage (170V). The input AC source power is converted to DC through a wave rectifier (BD1) and the converted DC power will generate a constant waveform on the switching transformer using a high speed (100KHz) switching motion of TOP223Y. The D104 will rectify the generated voltage and transform into a steady 12V DC source power used for the digital display panel and relays. The regulator (KA7805) finally transforms into 5V DC source power for the control board and sensor's circuits.

Caution) Be careful to handle this circuit due to high voltages (AC115V, DC170V)

10-2) Oscillator Circuit

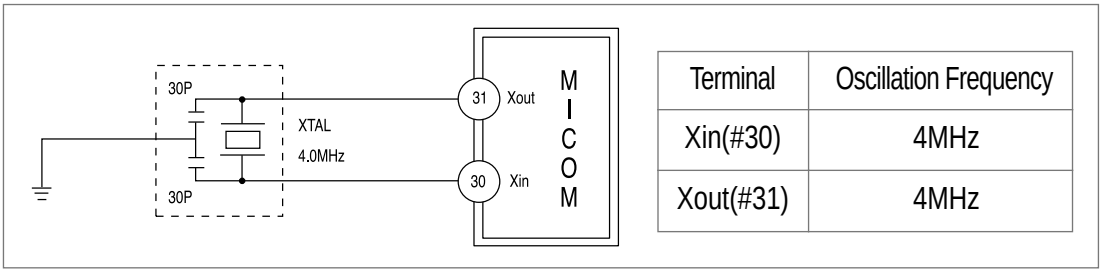

Terminal	Oscillation Frequency
Xin(#30)	4MHz
Xout(#31)	4MHz

This is oscillator circuit to generate synchronous clocks used to calculate the time for the microprocessor operation.

Note) If the specification of a resonator changes, micro-processor can not work properly.

10-3) Reset Circuit

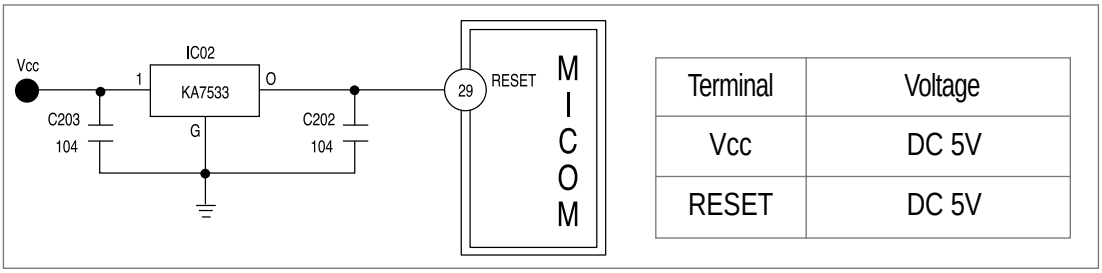

Terminal	Voltage
Vcc	DC 5V
RESET	DC 5V

The reset circuit is to initialize the values RAM & other sectors of micro-processor. When the power is engaged initially, the reset voltage becomes "Low," and it keeps "High" in the normal operation.

Circuit Descriptions

10-4) Door S/W Sensing Circuit

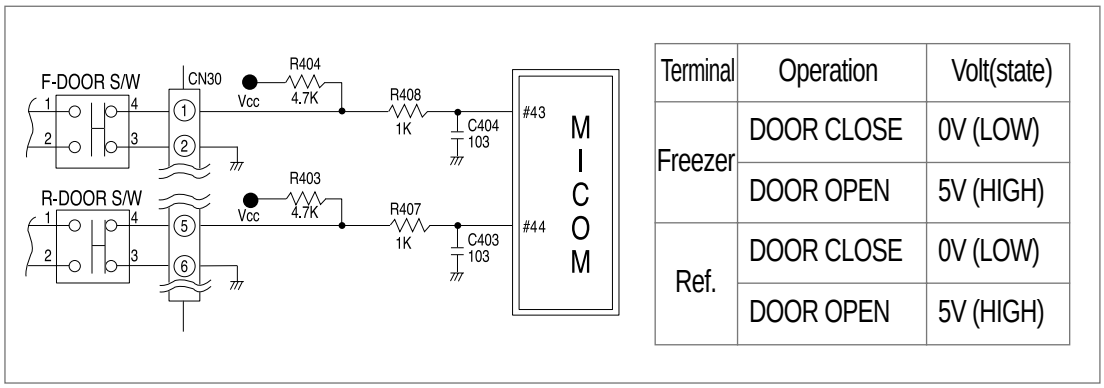

Terminal	Operation	Volt(state)
Freezer	DOOR CLOSE	0V (LOW)
	DOOR OPEN	5V (HIGH)
Ref.	DOOR CLOSE	0V (LOW)
	DOOR OPEN	5V (HIGH)

1) The terminals, ② and ⑥ of the connector (CN30) are grounded, and DC5V (Vcc) is supplied to the terminals, ⑤ and ⑥ through the resistors, R404 and R403 for the freezer and the refrigerator door, respectively.
2) The micro-processor senses the door's open and close based on engaged voltages, "Low(0V)" and "High(5V)," respectively.

Note) The door switch always should be checked when the evaporator fan is not running while the door is closed.

10-5) Temperature Sensing Circuit

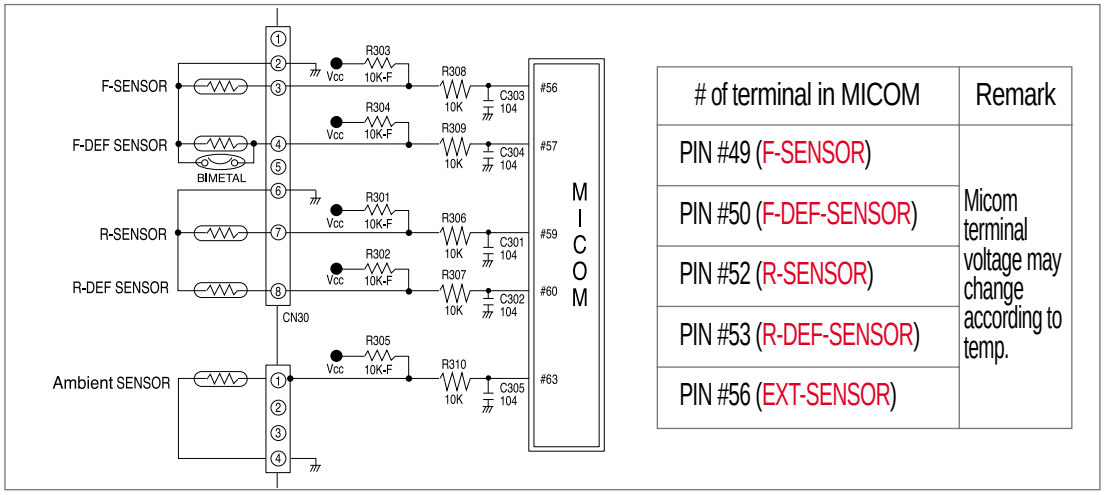

# of terminal in MICOM	Remark
PIN #49 (F-SENSOR)	Micom terminal voltage may change according to temp.
PIN #50 (F-DEF-SENSOR)	
PIN #52 (R-SENSOR)	
PIN #53 (R-DEF-SENSOR)	
PIN #56 (EXT-SENSOR)	

1) A thermistor with a negative temperature coefficient (NTC) is used for a temperature sensor.
2) Resistors, R 306 ~ R310 and capacitors, C 301 ~ C 305 are used for a noise protection purpose.
3) For the F-sensor, the input voltage into the micro processor (MICOM), VF is calculated by (Rth x Vcc)/(R303+ Rth), where Rth is a corresponding resistance to the thermistor's output (See Ref. 6 in Appendix).
4) The F-Def sensor is connected with a bimetal and a temperature sensor is in parallel. In a normal operation of the system, the bimetal is on and 0V is input into the micro-processor. During a defrost cycle, the bimetal will be off from 54°F, and a divided voltage with R304 enter to the micro-processor to keep sensing the set temperature.

Circuit Descriptions

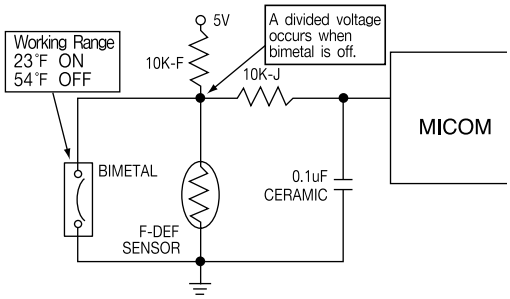

Note)

1) F-DEF-sensor and Bimetal work in parallel.
2) At the first power on, an open error (5V input to MICOM) can be detected by self-diagnostics. A short error will be ignored.
3) In self-diagnostics during a normal operation, only an open error can be detected.
4) The F-DEF heater will be off at the set temperature after the bimetal is off.

10-6) Key Scan and Display Circuit

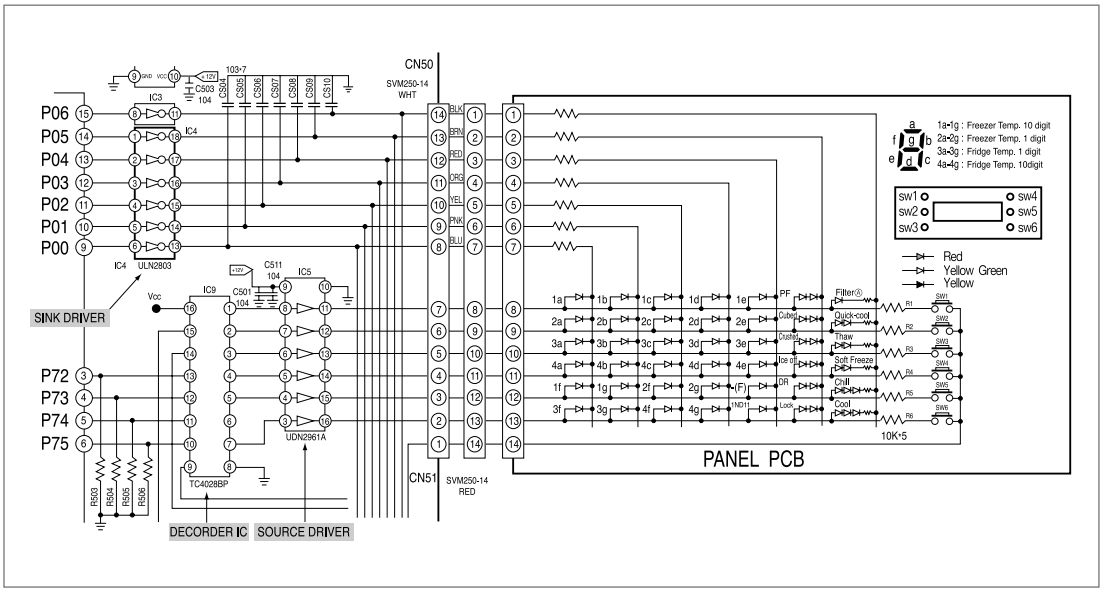

1) Key Scan and display operation.

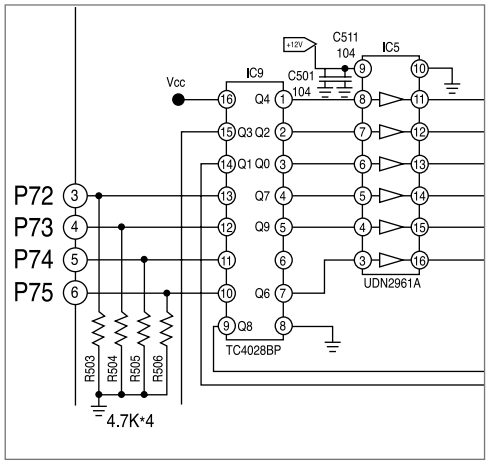

The model uses a decorder IC which 4 inputs and 9 outputs. If the IC 9 decorder (TC4028BP) receivesd signals from MICOM pins (3∽6), an output signal per 2 miliseconds comes out from Q3, Q41, Q8, Q6, Q9, Q7, Q0, Q2, and Q4 pin in sequence. This signal enters to a driver IC input terminal of the CoolSelect Zone™ PCB and IC5 (TD 62783AP), then approximate 11V peaks will generate from an output terminal as shown on the next page.

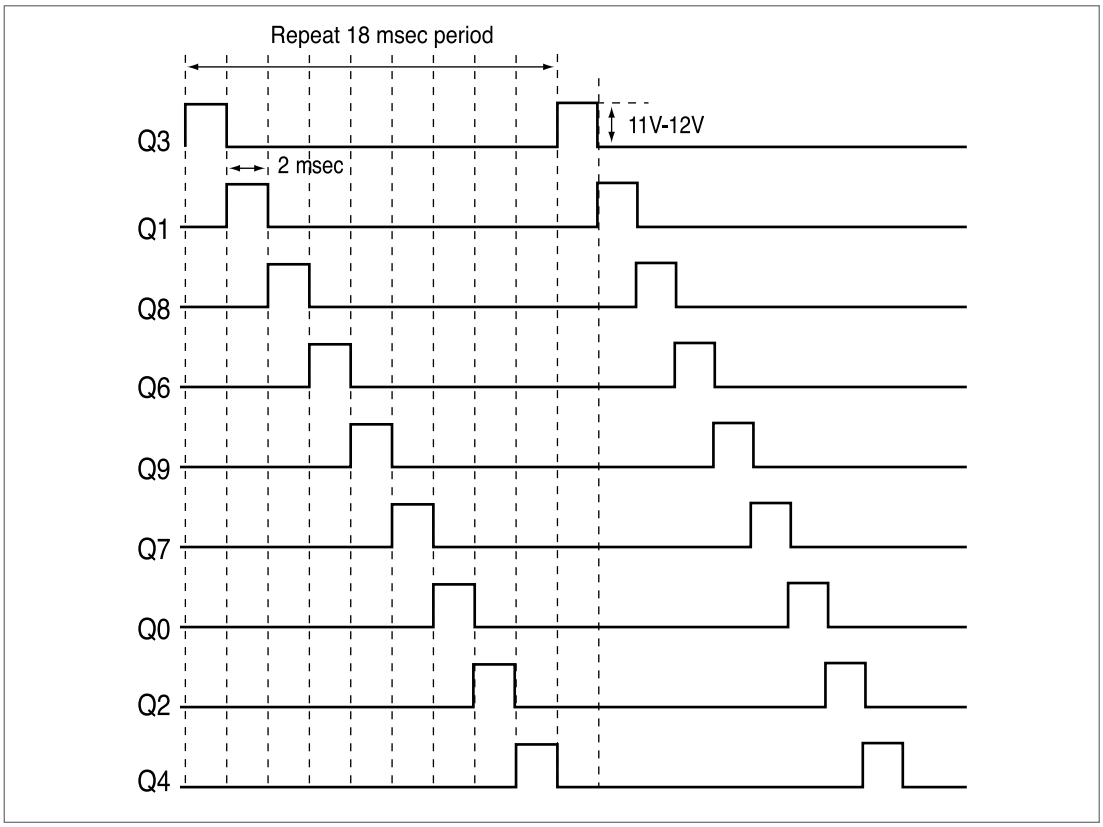

The step signals of DC 11～ 12V will be generated periodically. If a sink signal outputs from IC4, DC 11-12V will be applied to the LED input terminal and sink the LED output terminal to 0V. Therefore, LED will be ON for 2 miliseconds.

2) Key Scan

The 6 step signals, Q6～Q4 are applied to scan the 6 keys (buttons). When SW6 is pressed, the step signal from Q6 will be reduced to 5V and entered to the MICOM, then MICOM will match a corresponding function for SW6 key.

10-7) CoolSelect Zone™ Panel Circuit

1) CoolSelect Zone™ display panel and temperature sensor

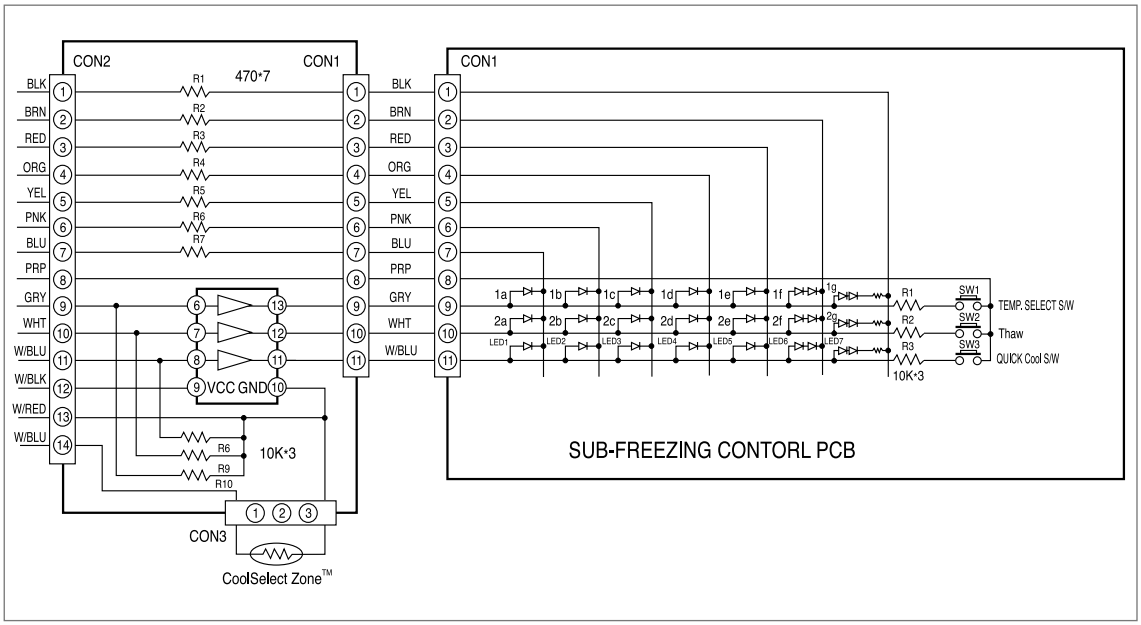

1-1) CoolSelect Zone™ is referred to as a storage drawer to implement features of Quick cool, Thaw, and Select (Soft Freeze, Chill, and Cool).
1-2) CoolSelect Zone™ has an additional display panel. Panel LED are off while the doors are closed. When a door is open, micro-processor senses its signal and LEDs will be on.
1-3) The basic operational principle is the same as the key scan process.
1-4) The additional sensor can measure the temperature of CoolSelect Zone™. This sensor enables to control the features of CoolSelect Zone™.

2) Damper drive circuit

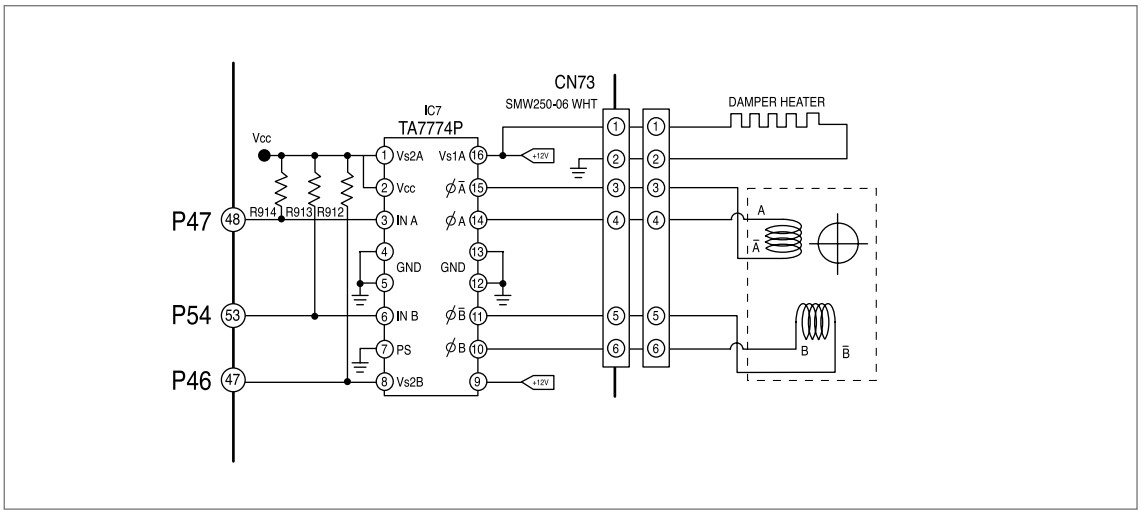

Circuit Descriptions

2-1) CoolSelect Zone™ Drawer is controlled by a damper to supply or block cold air. For Quick Cool, the damper will be close. So cold air is supplied only to CoolSelect Zone™ Drawer. For Thaw, the evaporator heater of refrigerator is ON and the damper is controlled by the refrigerator temperature.

2-2) The stepping motor controlled by a Driver IC TA7774P(IC7) operates the damper. The stepping motor uses 4 combined signals to open and close the damper.

Note) To prevent the malfunction from a high humidity, a Dc12V, 1 watt heater is mounted and activated continuously.

10-8) Fan Motor (BLDC) Drive Circuit

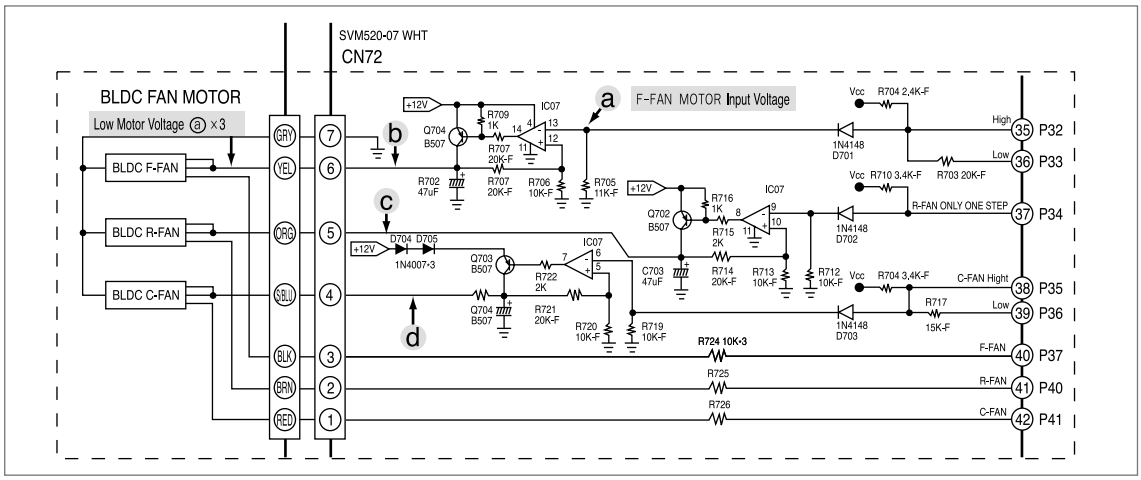

1) Motor drive circuit

1-1) This refrigerator adopts a BLDC motor froeduce energy consumption, Motors of the freezer, refrigerator and the machine compartment are composed of the BLDC. For RS2534, R-fan is operated by AC 115V Motor.

1-2) Voltages between high-speed and low-speed

	Voltage of motor			Remark
	Measure b (F-FAN)	Measure C (R-FAN)	Measure d(C-FAN)	
High	11.1V	10V	10V	In the normal operation, MICOM No. 40, 41 and 42 applies a constant frequency; and MICOM defects the signal to check the failure of motor. (frequency(Hz) × 12 = motor rpm)
Low	10V	10V	8.3V	

Note) Under the conditions, the fans will be operated in 2 options, such as High and Low mode. Generally, it is operated in the High mode during a day time and in the Low mode at night.

1-3) When the motor rpm is in 600~700, it will stop automatically and it tries to resume after 10 seconds. If the motor is not working properly after 5 time trials, it will rest for 10 minutes, then try to resume again. This process will be done continuously.

Note) If there is an abnormal situation for the motor, the self-diagnostics will show the corresponding LED segment.

10-9) EEPROM Circuit

EEPROM is semiconductor memory not to be erased. It can be used in the area of unstable electric power.

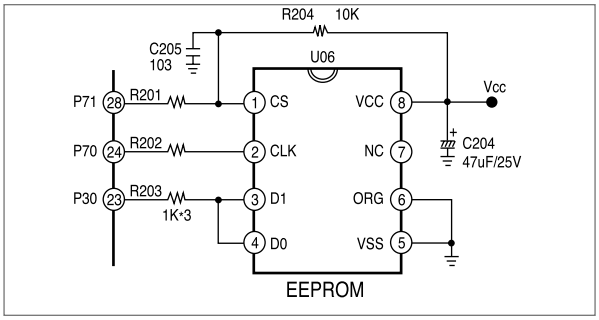

10-10) Option Circuit

There are a variety of models that have a different function. A different model can set up to use option circuit as shown.

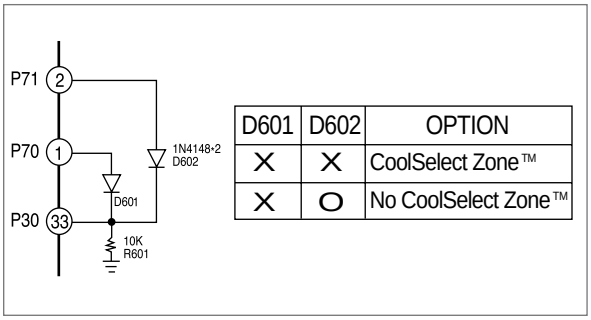

D601	D602	OPTION
X	X	CoolSelect Zone™
X	O	No CoolSelect Zone™

10-11) Load Drive Circuit

1) The control of load in the system is accomplished by the main PCB.

2) Most of relays or SSRs can control compressor, refrigerator/freezer defrost heater, and several option functions.

3) For compressor, #18 pin of micro processor signals High (5V). This signal inputs #5 pin of IC3 and #14 of output terminal which have base and collector functions of IC3 turns on and connects the GND. Relay 73 will be grounded through #14 of IC. Magnetic lines will generate so that the second side of RY73 is activated and 115V is supplied to the compressor. On the other hands, if #18 of micro processor turns Low(0V), #5 of IC3, the current of RY 73 relay, and magnetic line will shut down in sequence. A contact point in secondary side of Relay 73 is off. Finally compressor will stop.

4) The principles of other loads is the same as 3) item described.

Note) SSR(Solid State Relay) is a kind of Relay.

*COMP. equivalence circuit of drive section

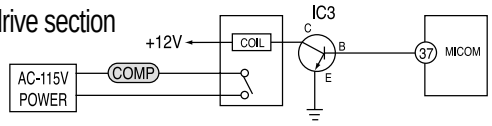

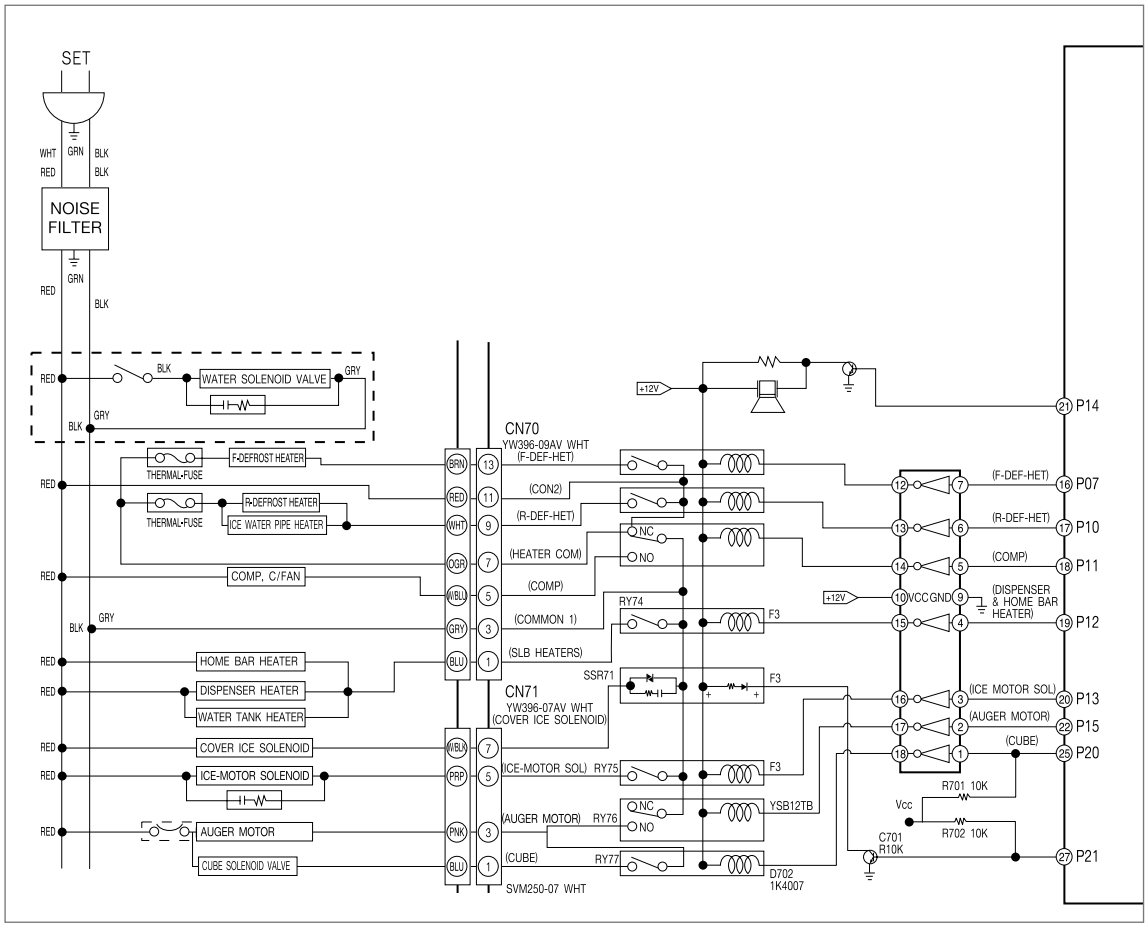

11. Diagnostics

11-1) If power is not ON

Caution!

At the power of main PCB, the 115V power and a high-voltage over DC 170V occur. Please take care of yourself on repair and measurement.

To check the main PCB, please apply descriptions of operation and references in the manual.

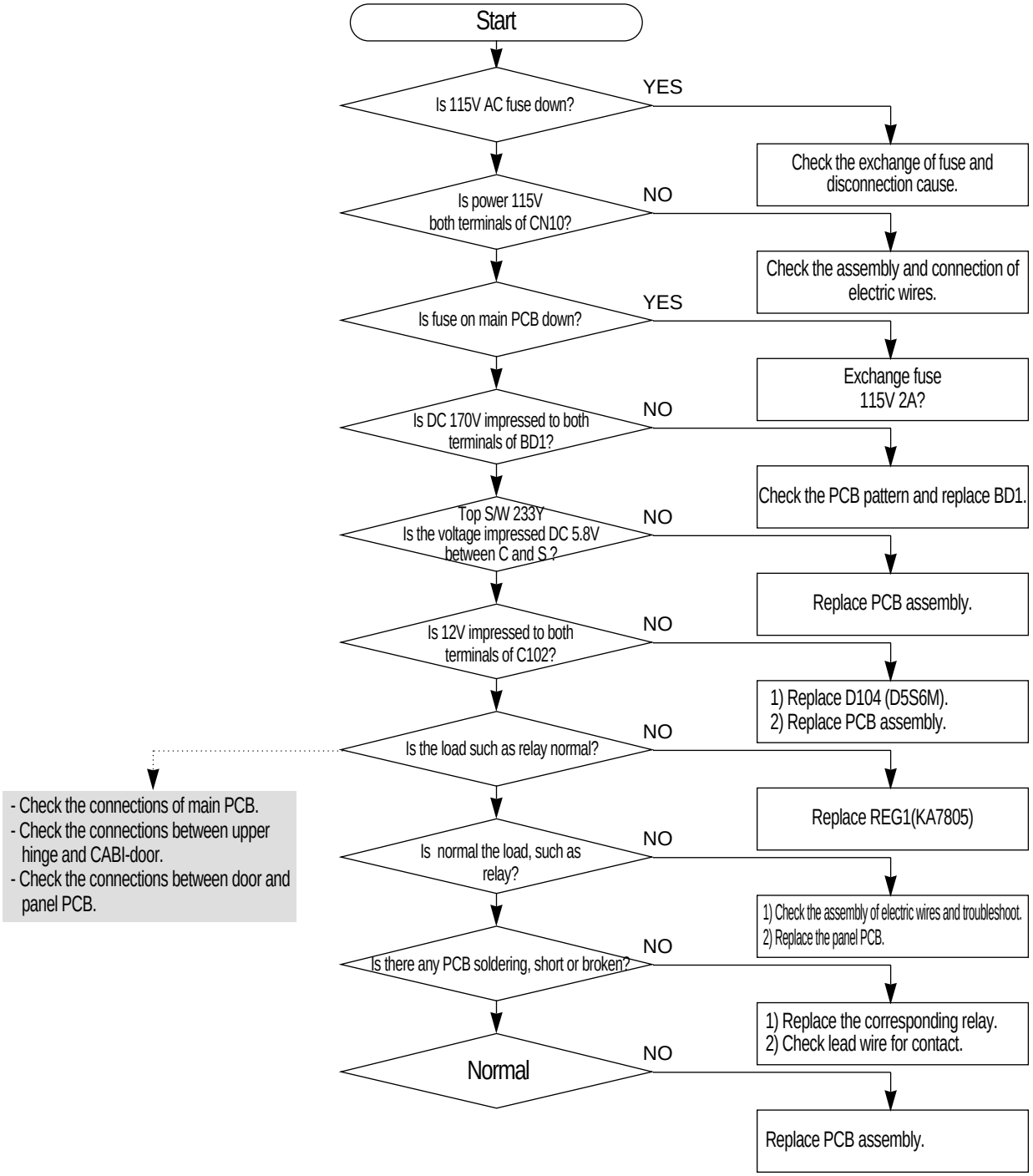

11-2) If the compressor and cooling fan motor don't work normally

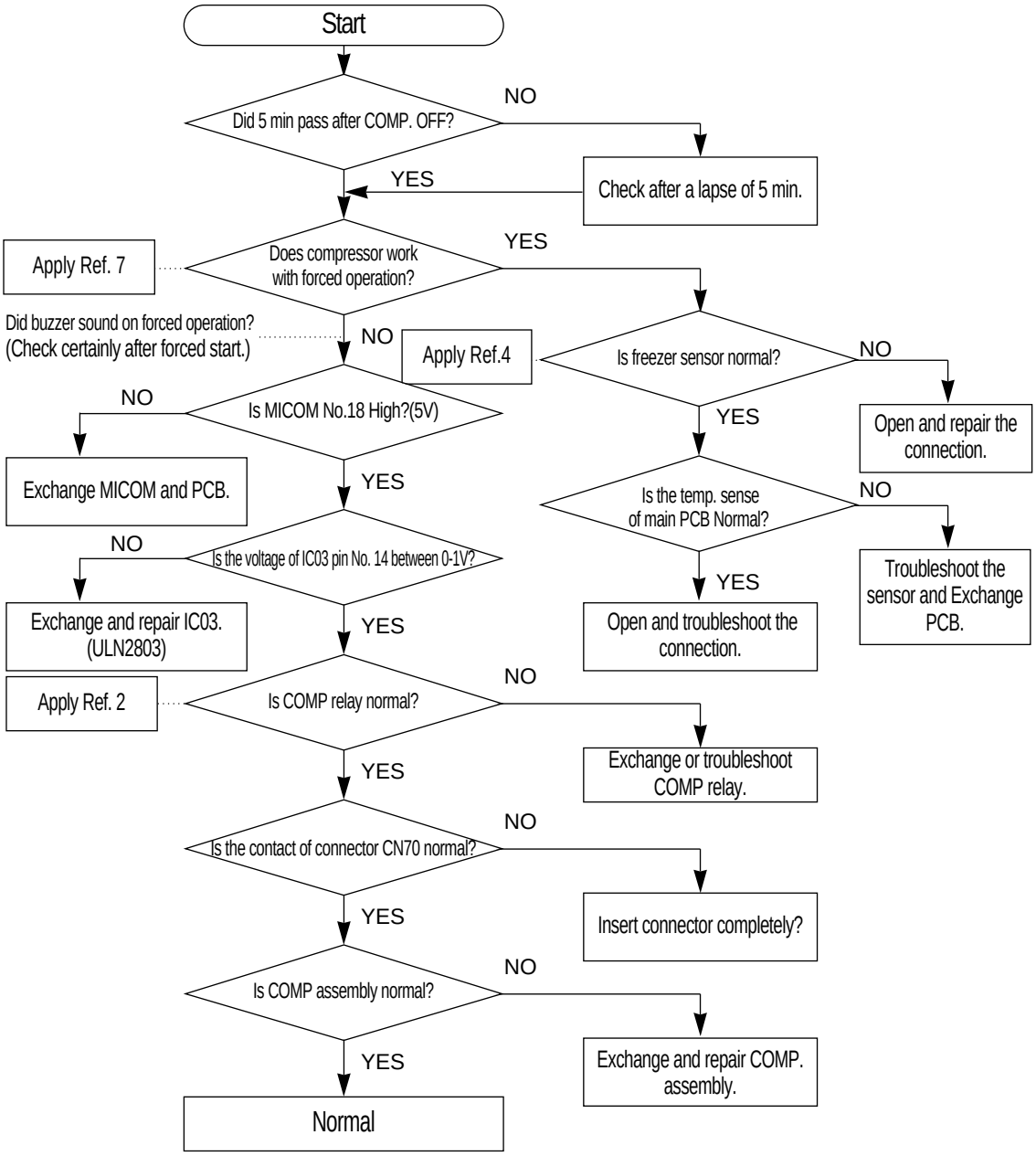

11-3) If defrost function

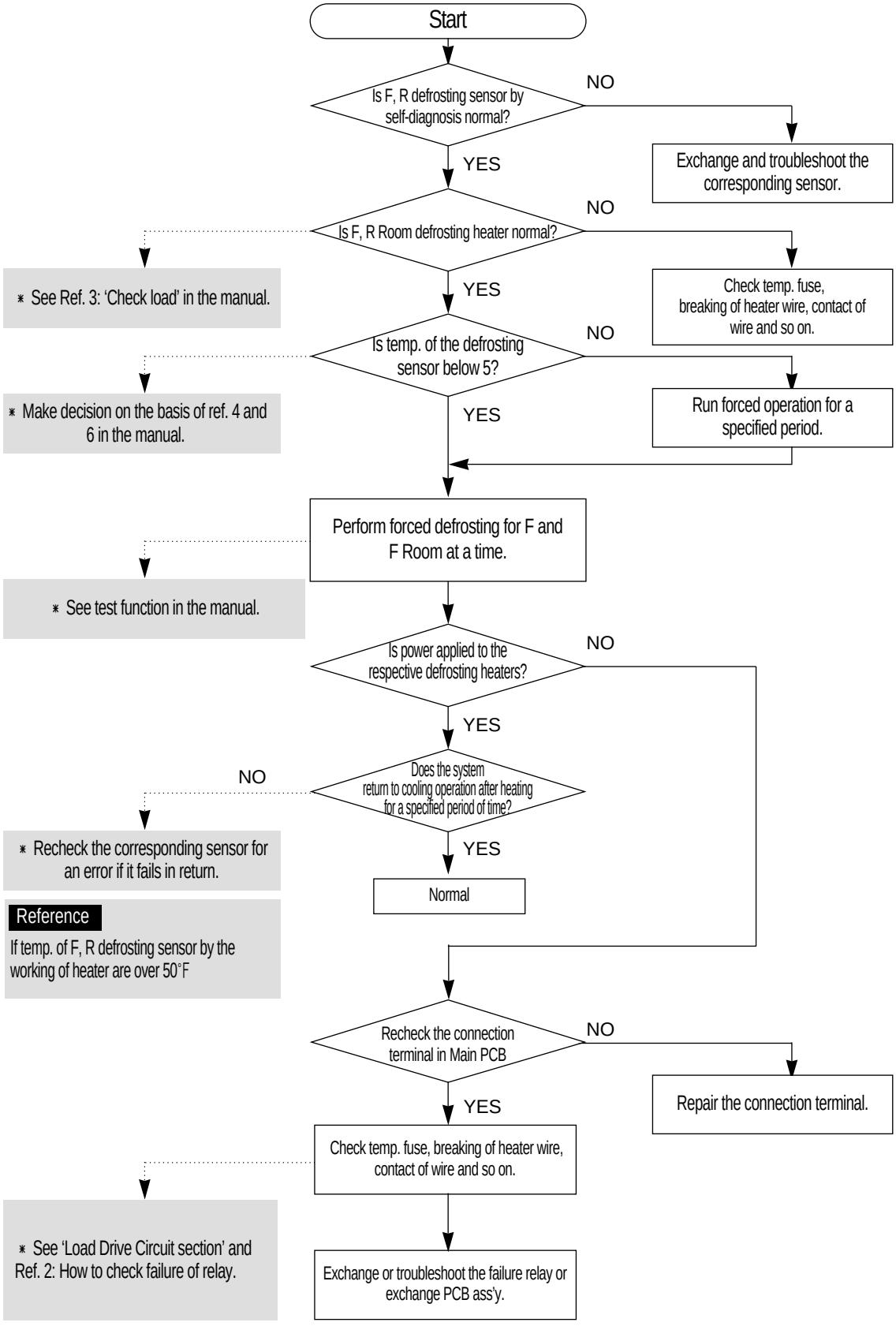

11-4) If there is a trouble with self-diagnosis

- Error of sensor can be seen on the front display of refrigerator. If power is impressed to refrigerator first, an failure of sensor is found. The refrigerator will stop working and display(blink) the region of trouble-occurred sensor repetitively.
- Even if sensor has failure during the operation, the refrigerator will not stop working but can run the normal cooling operation because of being operated in the Emergency Operation mode. Therefore you' re requested to use how to check self-diagnosis(at page 26) in the manual.

1) If the ambient sensor has trouble

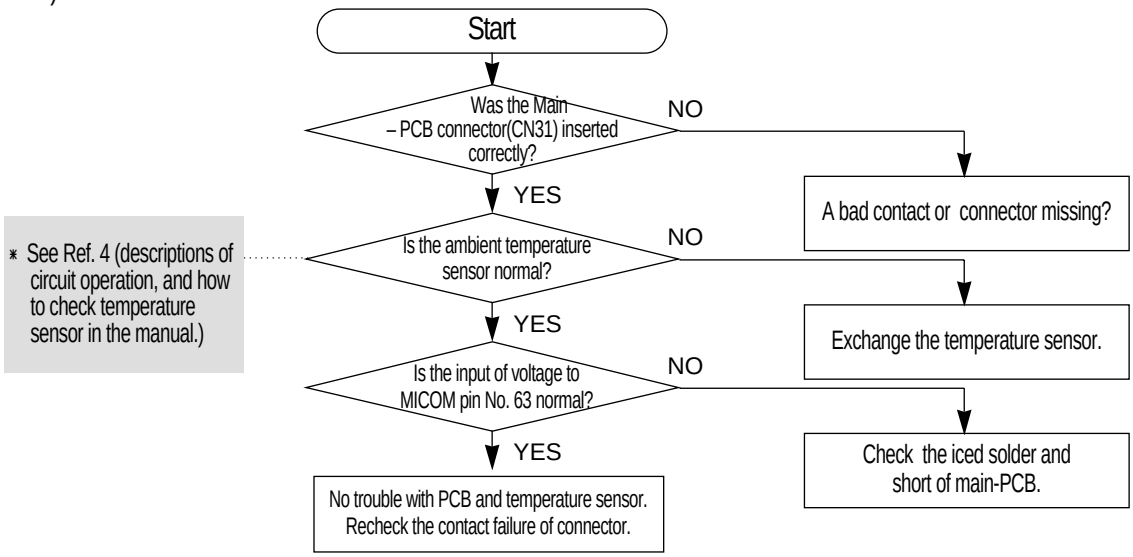

2) If the temperature sensor of R room has trouble

- The sensor of freezer is connected in parallel with Bimetal. See the contents of Temperature Sensing Circuit section in the description of circuit operation.

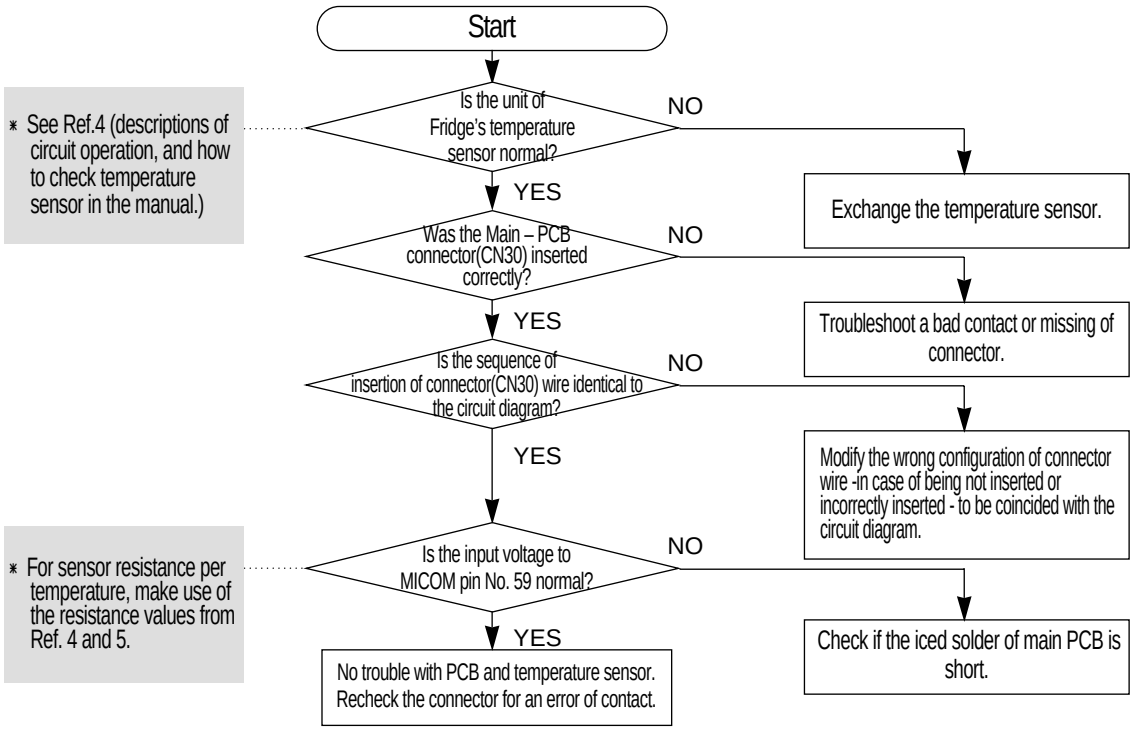

11-5) If alarm sound

1) If "Ding-Dong" sounds continuously

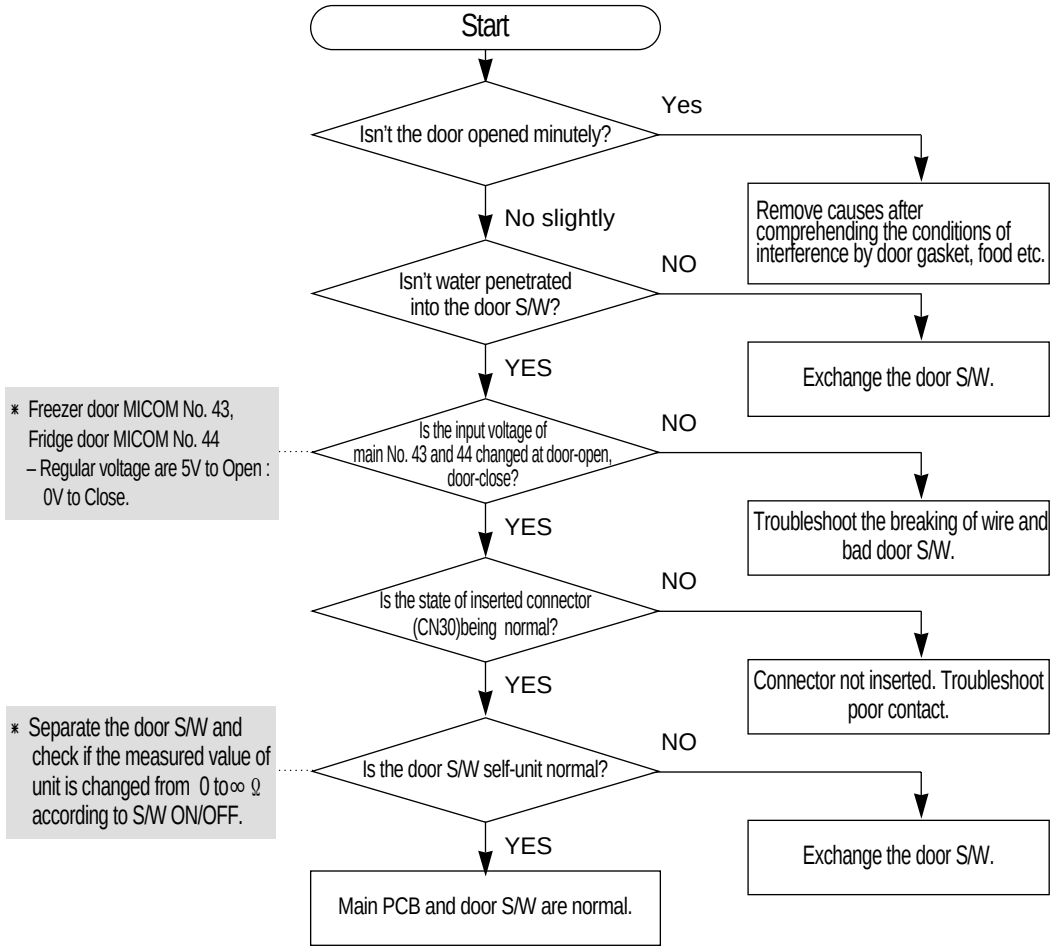

2) If "Ding-Dong" sounds continuously

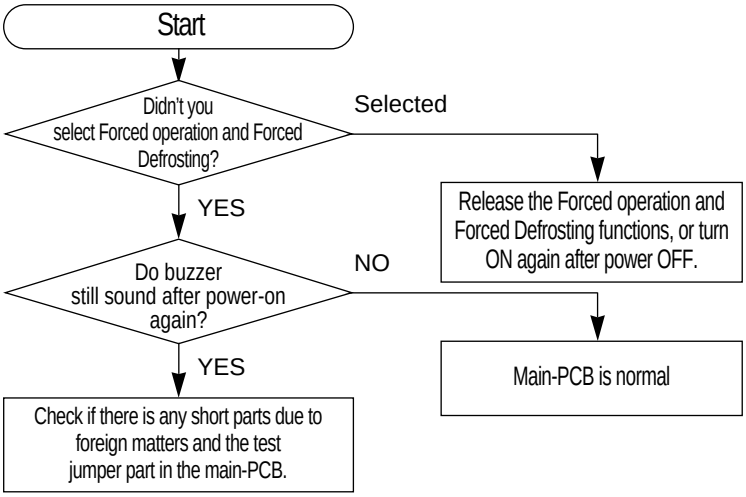

3) Without sound of buzzer operation

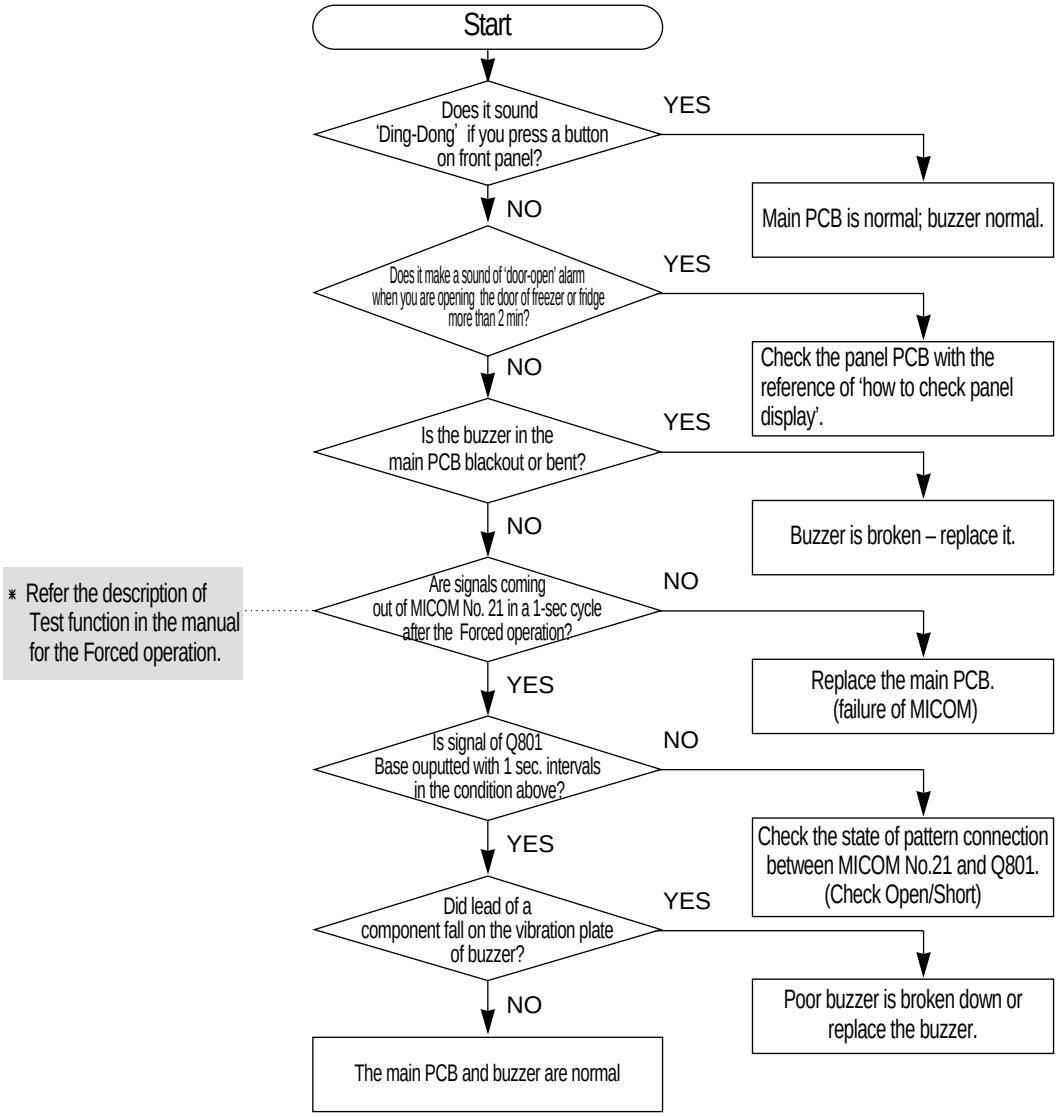

11-6) If the panel PCB is not working normally:

1) Where lighting of the panel PCB is disabled, or only some lamps are disabled.

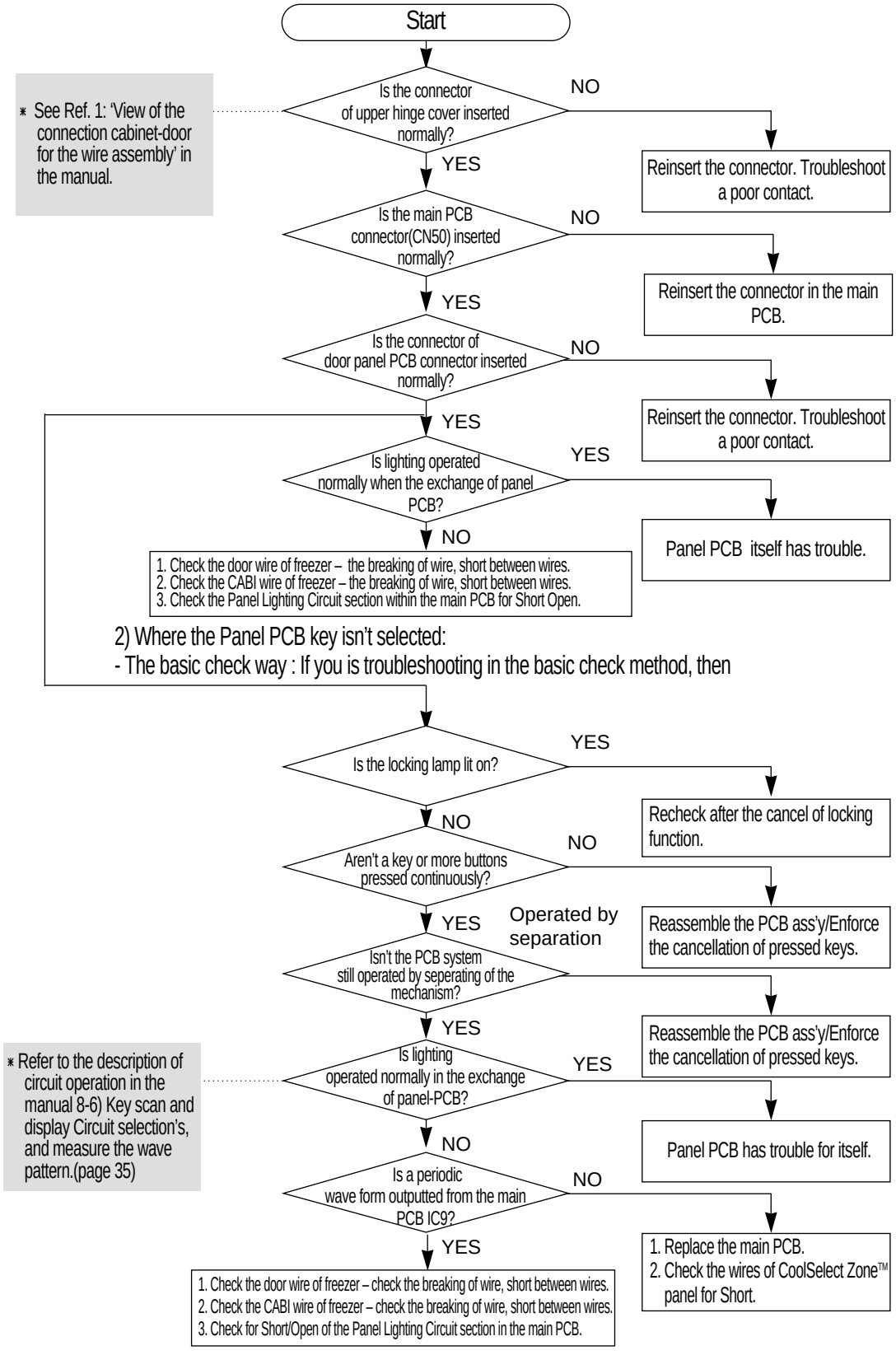

11-7) If fan doesn't work:

Reference

- The refrigerator has been applied with the BLDC fan motor for RS2534, R room Fan is AC motor used. The BLDC motor is driven by DC 8-12V.
- Under the normal condition of COMP ON, it is operated together with F-FAN motor. With operation of the CoolSelect Zone™ function, the F-Fan motor will not work. If the door is opened and closed once at a high ambient temperature, the BLDC motor would be operated after a 1-minute or longer delay. Therefore, you' re advised not to take it for an error.
- When the Fridge is open, the freezer fan motor will also stop working simultaneously with the fan motor. (for the purpose of performance improvement).

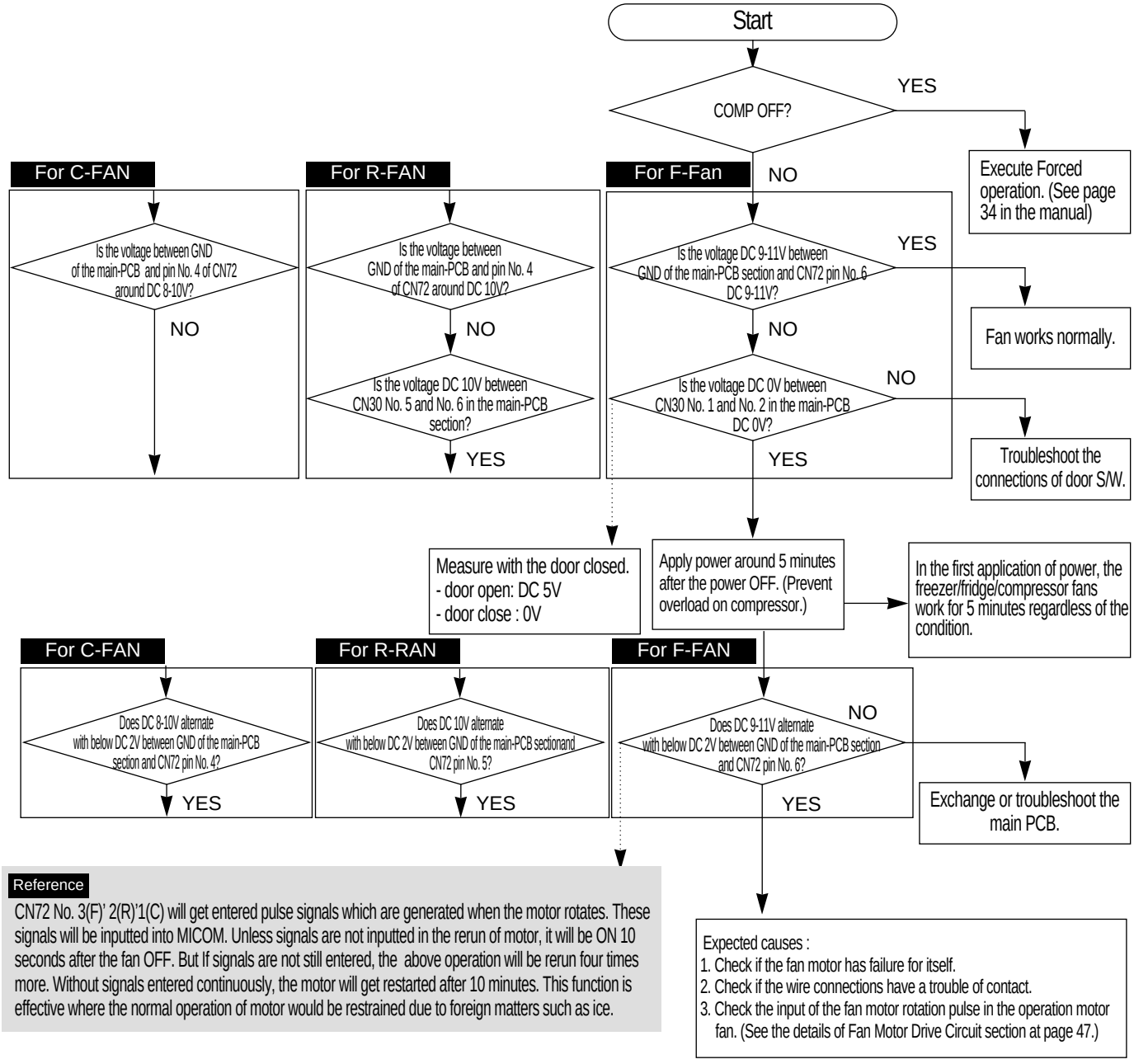

Reference

CN72 No. 3(F)' 2(R)'1(C) will get entered pulse signals which are generated when the motor rotates. These signals will be inputted into MICOM. Unless signals are not inputted in the rerun of motor, it will be ON 10 seconds after the fan OFF. But If signals are not still entered, the above operation will be rerun four times more. Without signals entered continuously, the motor will get restarted after 10 minutes. This function is effective where the normal operation of motor would be restrained due to foreign matters such as ice.

Expected causes :
1. Check if the fan motor has failure for itself.
2. Check if the wire connections have a trouble of contact.
3. Check the input of the fan motor rotation pulse in the operation motor fan. (See the details of Fan Motor Drive Circuit section at page 47.)

11-8) If CoolSelect Zone™ isn't operated normally (RS2556, RS2578)

1) If the lamp of CoolSelect Zone™ is not lit.

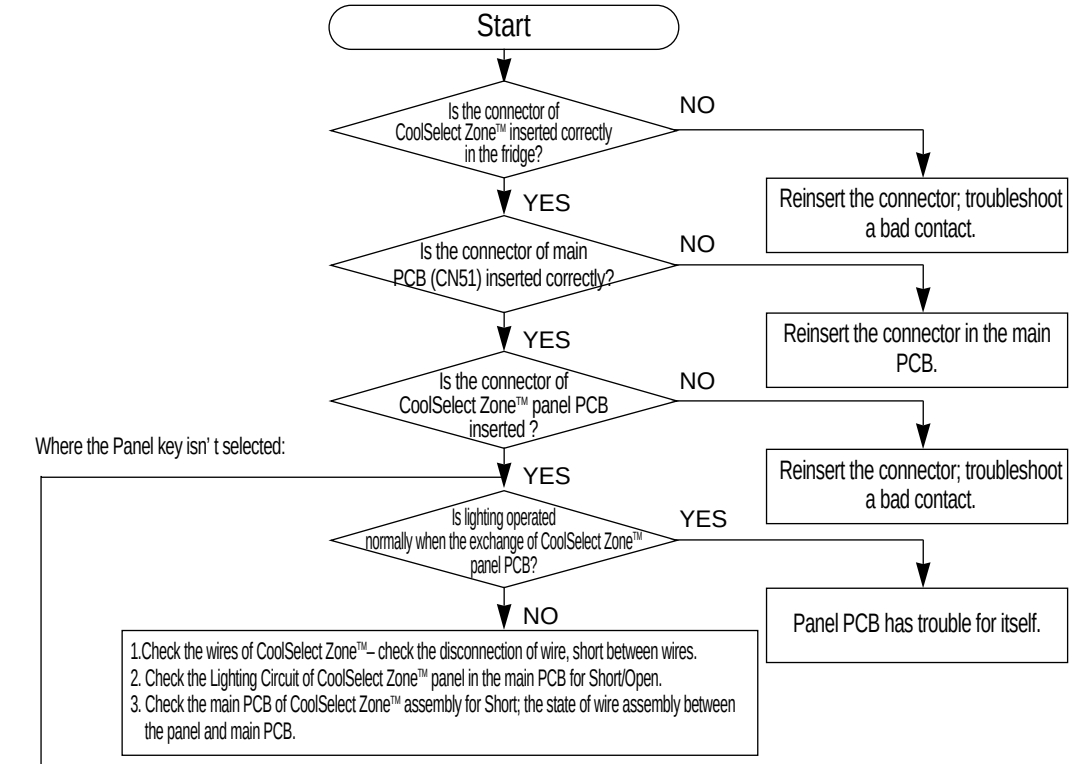

2) Where the Panel PCB key isn't selected:

- The basic method is applied to check – if you fail in troubleshooting after above the execution, then

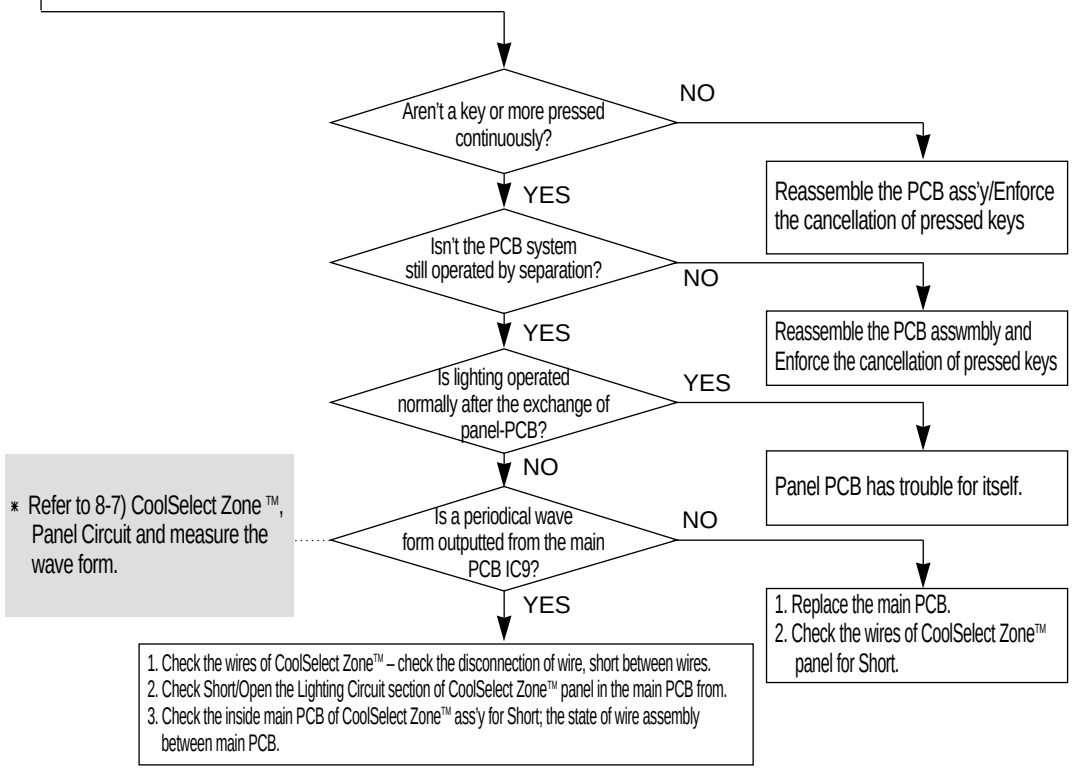

11-9) If the lamps of freezer / refrigerator fail in lighting:

⚠ Caution!

1. When you are exchanging the lamp of freezer, please exchange or troubleshoot it with the power OFF to avoid an electric shock.
2. Please keep in mind you do not get burnt by the excessive heating of an incandescent light bulb.

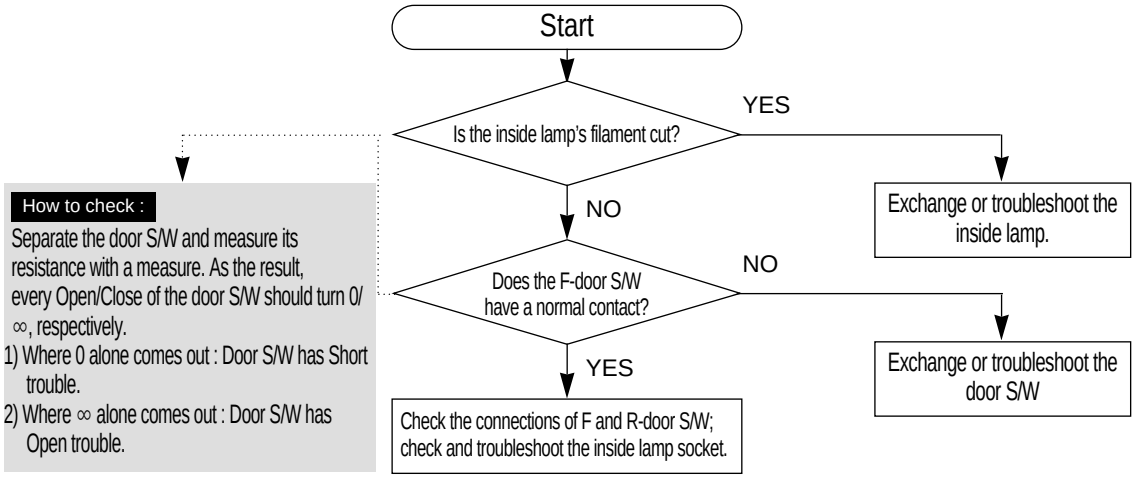

Reference

If the door is opened, then the contact of door S/W is opened and MICOM gets applied 5V to finally sense Open. If 5V has been sensed over two minutes afterwards, then an Door-Open alarm will sound 'Ding-Dong' for 10 seconds in a one-minute cycle. For that reason, if the door S/W has failure, the refrigerator can make a "Ding-Dong" sound per a one-minute cycle. Please note step for its service!

11-10) If the ice chute cover solenoid doesn't work :

Preliminary check

1) Check if the solenoid is operated unconditionally for 0.3 sec, independent of the Open/Close condition of cover ice-route, after a lapse of about 5 seconds from the outset of power ON. (Before installation, the cancellation of cover ice-route Open is enabled.)
2) Check if the connector of upper hinge section is hook-up correctly.

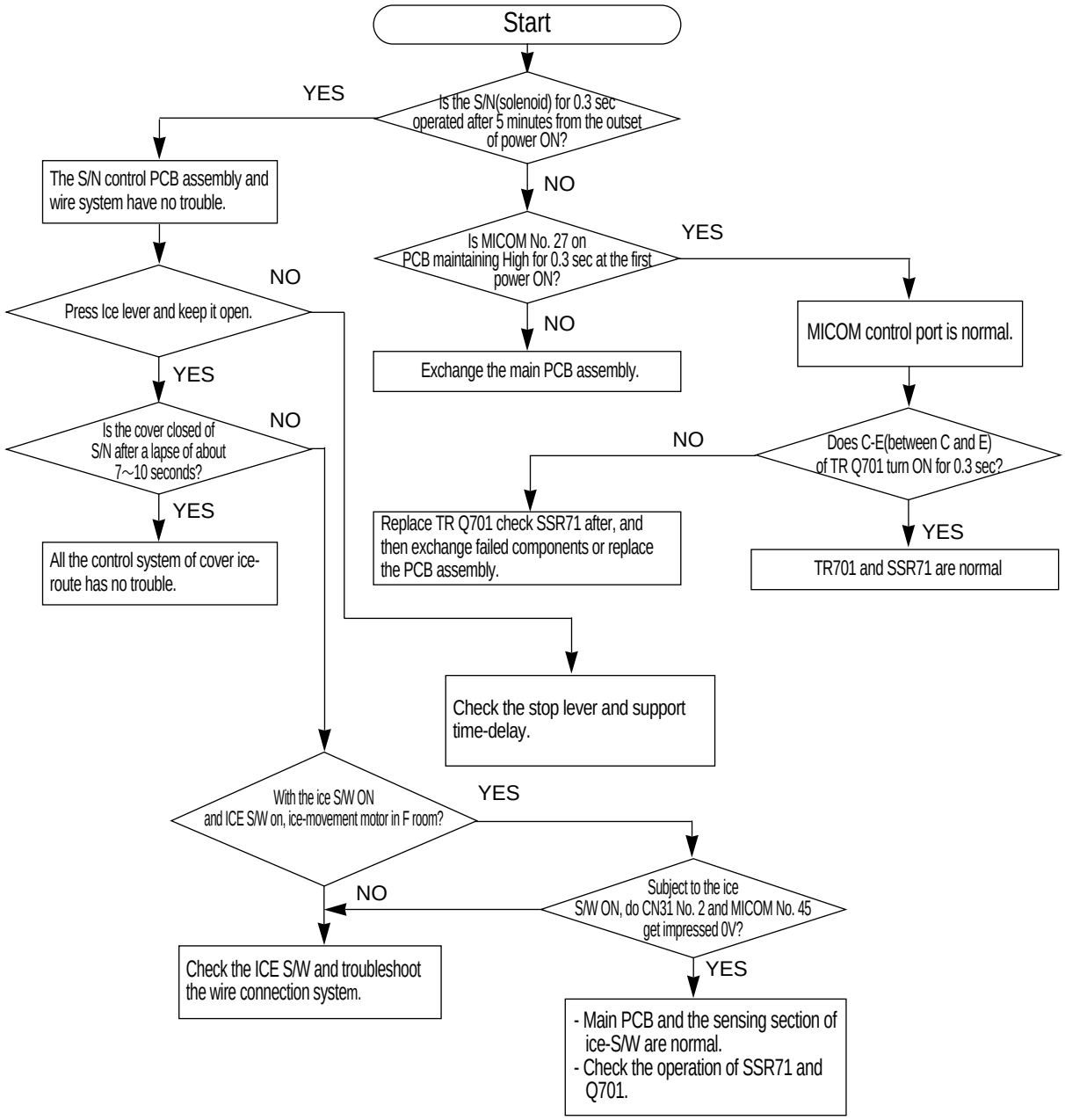

11-11) If Crushed Ice/Cubed Ice doesn't work properly:

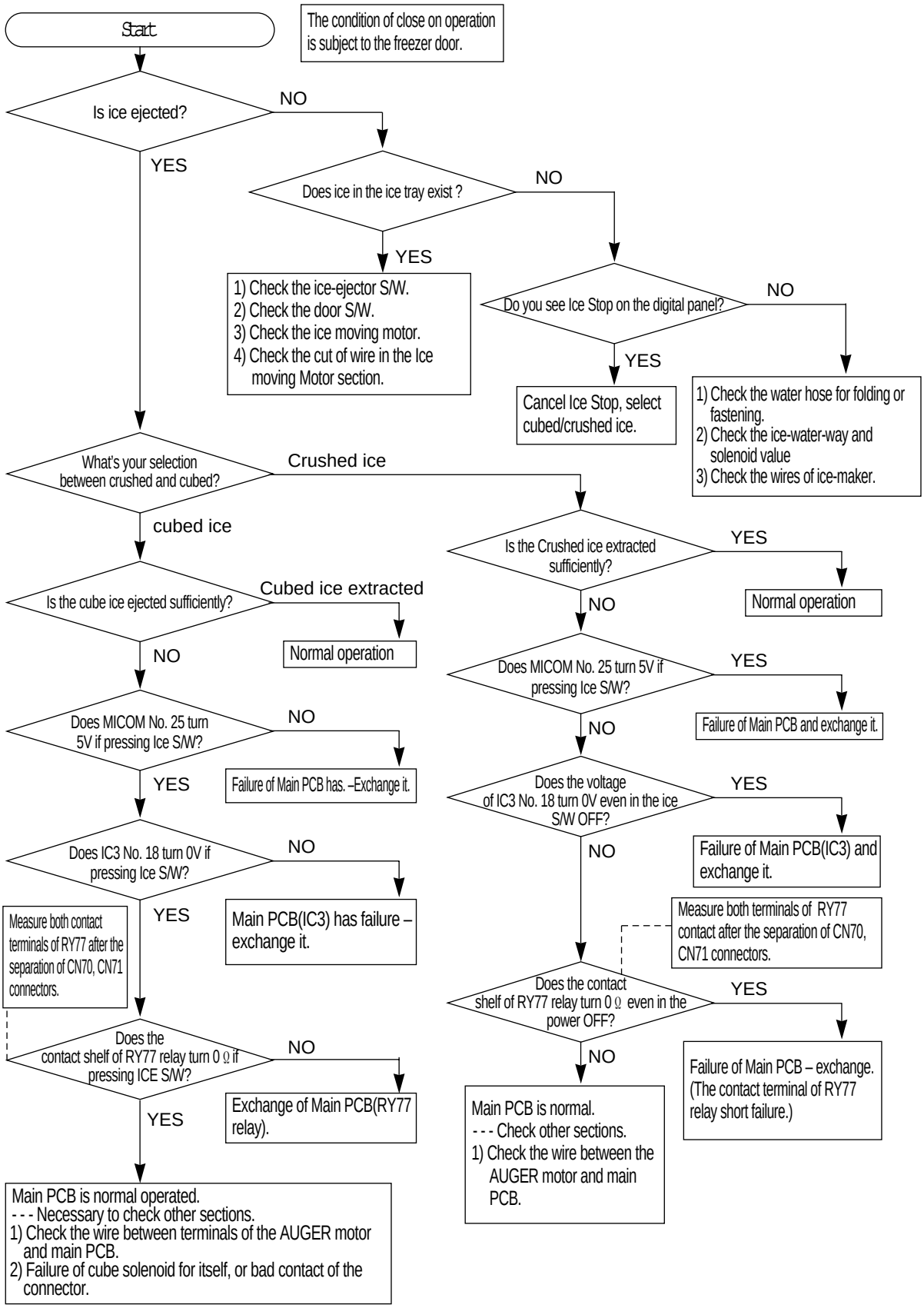

13. Safety Instructions on Service

- Unplug the refrigerator before making any repair or any replacement.
  ⇨ Avoid the electric shock.

- Use the rated components on the replacement.
  ⇨ Check the correct model number, rated voltage, rated current, operating temperature and so on.

- On repair, be sure that the wires such as harness are bundled tightly and are not exposed by water.
  ⇨ Bundle wires tightly in order not to be detached by the external force.

- On repair, remove completely dust, particles or other things on housing parts, harness parts, and connectors.
  ⇨ Cleaning may prevent fire by tracking or short.

- Check if there is any trace indicating the infitration of water on electrical parts.
  ⇨ If there is kind of trace, change the related components or do the necessary action such as taping using the insulating tape.

- After repair, check the assembled state of parts.
  ⇨ It must be in the same assembled state when compared with the state before disassembly.

- Check the surrounding conditions of the installed refrigerator.
  ⇨ When the refrigerator is located at humid or wet place, or the installed state is unstable, change the location.

- If needed, do the ground.
  ⇨ Especially, if there is a possibility of the electric leakage, this appliance must be properly grounded.

- Do not allow consumers to use one outlet for several plugs.

- Check whether the power cord is placed under other appliance and so, damaged, worm-out squeezed.
  ⇨Repair immediately the defective power plug or outlet.
  ⇨Make sure that the power cord is not placed under other appliance or squeezed.

- Do not allow consumers to keep bottles or the likes in the Freezer or to keep foods in unstable position.

- Do not allow consumers to repair the appliance by themselves.

- Do not allow consumers to keep other chemicals except food.
  ⇨Medicines and other materials for research ; This appliance will not maintain the precisely constant temperature for them.
  ⇨Volatile material(Alcohol, Benzene, Ether, LP gas etc.) : possibility of explosion

Appendix Ⅰ (Reference for circuit diagnostics)

Ref.1) Wire connector on the cabinet door.

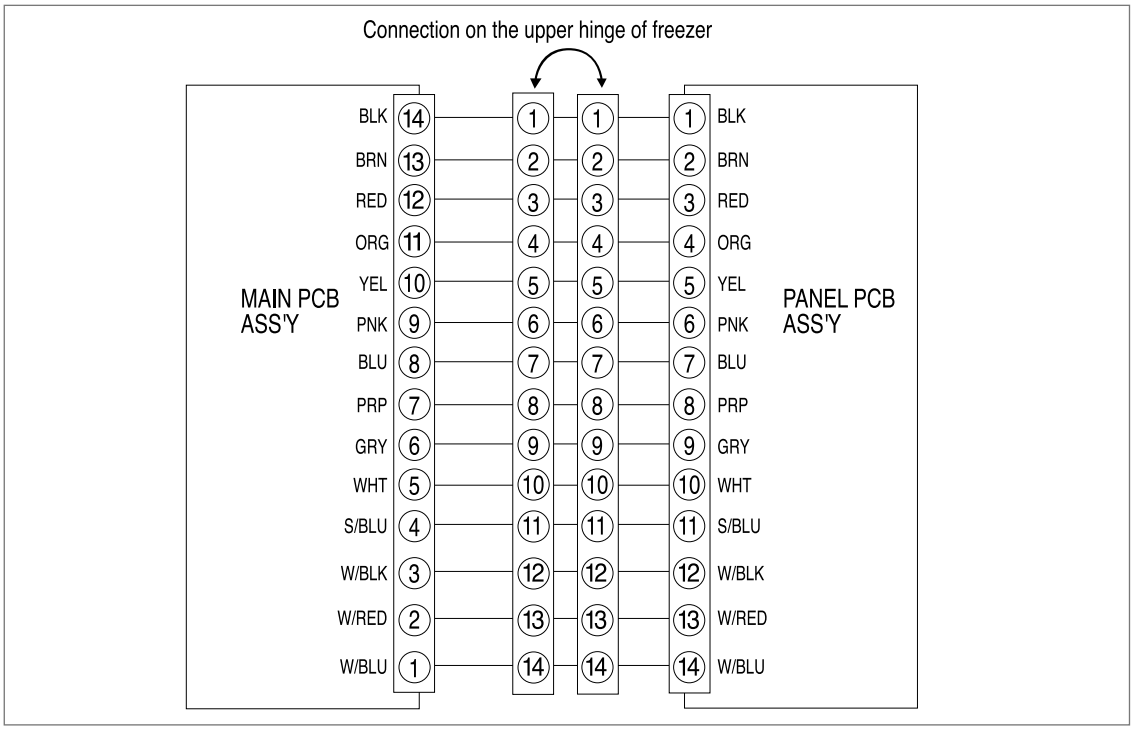

Ref. 2) How to check relay failure

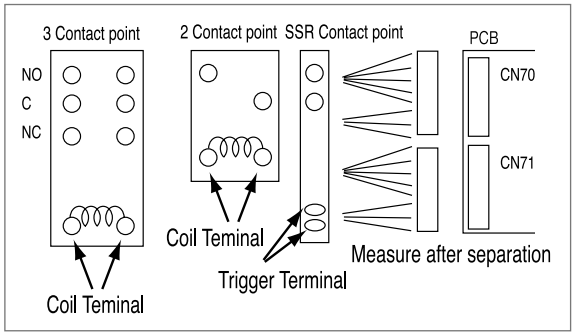

Note) NC -> Normally Close (C terminal and ON terminal)
NO -> Normally Open (C terminal and Open terminal)
C -> Common Terminal

Disconnect the connector of the main PCB CN70 and CN71, then check the follows :

1. Measure the voltage at both terminals of a coil and determine if the relay is working.
2. Measure the voltage at both terminals of a trigger and determine if SSR is working.
3. Measure the resistance at both terminals of a load contact, and determine if there is an error in voltages of coil and trigger.

Div. of contact	Voltage at both terminal of coil and trigger	Both terminals of contact	Resistance value	
3-contact terminal Relay	DC 12V (Working Condition)	Between C and NO	0Ω (Short) -> Normal	
		Between C and NC	∞Ω (Open) -> Normal	
	DC 0V (Stop Condition)	Between C and NO	∞Ω (Open) -> Normal	
		Between C and NC	0Ω (Short) -> Normal	
2-contact terminal Relay	~ DC 12V (load working condition)	Between both terminals of contact	0Ω (Short) -> Normal	
	~DC 0V (load stop condition)	Between both terminals of contact	∞Ω (Open) -> Normal	
SSR	~DC 12V (load working condition)	Between both terminals of contact	About 4-5kΩ (Short) -> Normal	
	~DC 0V (load stop condition)	Between both terminals of contact	∞Ω (Open) -> Normal	

Appendix Ⅰ(Reference for circuit diagnostics)

Ref. 3) Check a load

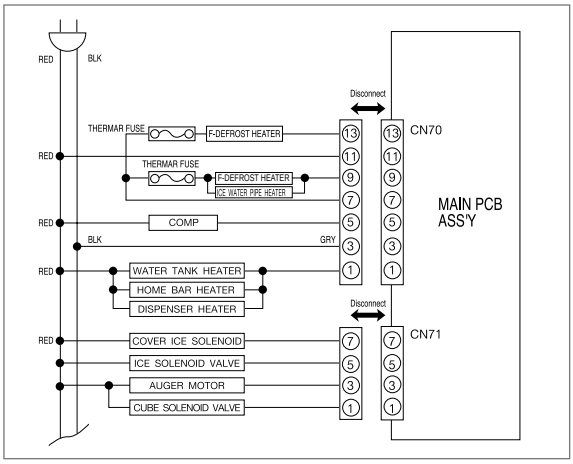

Unplug the powercord and disconnect the main PCB CN70 and CN71, the measure the follows :

1. As shown in table below, measure the resistance between terminals, check load trouble and wire connection error.
2. The diagram of circuit was drawn based on the maximum load. When a repair is needed, see the electric wiring diagram on the back of refrigerator to troubleshoot the corresponding model.
3. For safety, you must turn the power off.

Load	Measuremenr Termina l	Value	Contents
Freezer Def heater	between CN70 13 and CN70 7	0 Ω	Temperature fuse, heater, wires short trouble
		∞ Ω	Temperature fuse, heater, wires disconnection trouble
Ref. Def heater	between CN70 9 and CN70 7	0 Ω	Temperature fuse, heater, wires short trouble
		∞ Ω	Temperature fuse, heater, wires disconnection trouble
1) Beverage Station™ heater 2) Dispenser heater 3) Water tank heater	between CN70 11 and CN70 1	0 Ω	Heater, wires short trouble
		∞ Ω	Heater, wires, and connector disconnection
Cover Over Solenoid	between CN71 7 and CN70 11	0 Ω	Coil, wires short trouble
		∞ Ω	Coil, wires disconnection trouble
Ice Solenoid Valve	between CN71 5 and CN70 11	0 Ω	Coil, wires short trouble
		∞ Ω	Coil, wires disconnection trouble
Auger Motor	between CN71 3 and CN70 11	0 Ω	Coil, wires short trouble
		∞ Ω	Coil, wires disconnection trouble
Cube Solenoid Valve	between CN71 1 and CN70 11	0 Ω	Coil, wires short trouble
		∞ Ω	Coil, wires disconnection trouble

Appendix Ⅰ (Reference for circuit diagnostics)

Ref. 4) Check sensors

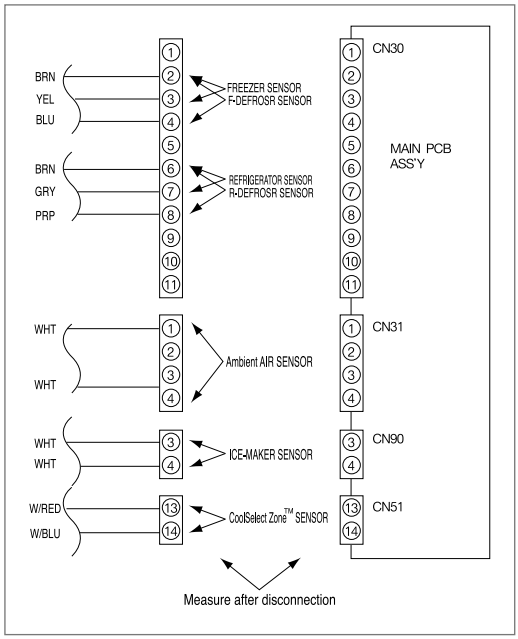

Disconnect the connector from the Main PCB, than measure the resistance of the following sensors.

1. Check the resistance the Freezer sensor cn30 between the no. 2 and 3.
2. Check the resistance the Fridge Room sensor cn30 between the no. 6 and 7.
3. Check the resistance the F Defrosting sensor cn30 between the no. 2 and 4.
4. Check the resistance the R Defrosting sensor cn30 between the no. 6 and 8.
5. Check the resistance between the no. 1 and 4 the ambient Air sensor cn31.
6. Check the resistance between the no. 3 and 4 of the Ice-Maker sensor cn90.
7. Check the resistance between the no. 13 and 14 of the CoolSelect Zone™ sensor cn51.
8. Decide the sensor by comparing the above resistances to the temperature of each sensor with the conversion table of sensor resistance and voltage from the reference temperature of Ref. 6 on this manual.

※ When the resistance is ∞ Ω or 0 Ω ,check the connection of electric wire and sensorconnector.

Ref. 5) Check Door S/W

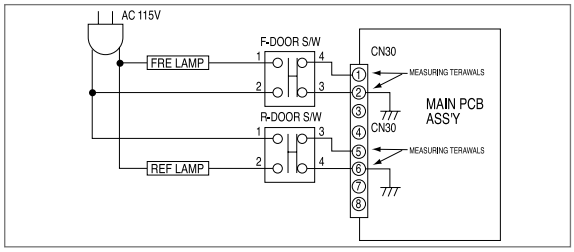

Check the condition in power on. Door S/W have 2 contact points. One contact point perceives the door open/close by DC 5V on the PCB. Another contact point turns on/off the Lamp.

(Lamp on the REF)

1. If the Lamp turns on correctly when the door is open, it is normal. Press the door s/w and check it the lamp turns off. If it doesn't work properly, check the door s/w on the refrigerator.

(Door open on the REF and the sensor part of the Main PCB)

1. Check the voltage between no. 5 "+" terminal and no.6 "-" terminal of CN30.
2. If 5V is checked when the door is open, it is normal.
3. If 0V is checked when the door is closed, it is normal. If it is not, check the door s/w and electric wire connection.

(Lamp on the FRE)

1. If the Lamp turns on correctly when the door is open, it is normal. Press the door s/w and check it the lamp turns off. If it doesn't work properly, check the door s/w on the FRE.

(Door open on the FRE and the sensor part of the Main PCB)

1. Check the voltage between no. 1 "+" terminal and no.2 "-" terminal of CN30.
2. If 5V is checked when the door is open, it is normal.
3. If 0V is checked when the door is closed, it is normal. If it is not, check the door s/w and electric wire connection.

Appendix Ⅰ(Reference for circuit diagnostics)

Ref. 6) Table of temperature sensor according to resistance and voltage conversion.

The input voltage to the MICOM PORT could be different by a hardware. This is a table based on the voltage using the 10kohm-F.
MICOM PORT voltage when the sensor is open: about DC 5V(Vcc LEVEL)
MICOM PORT voltage when the sensor is shorted: about DC 0V(Ground LEVEL)

Temp.(℉)	Resistance(㏀)	Voltage(V)
-43.6	98.870	4.541
-41.8	93.700	4.518
-40.0	88.850	4.494
-38.2	84.150	4.469
-36.4	79.800	4.443
-34.6	75.670	4.416
-32.8	71.800	4.389
-31	68.150	4.360
-29.2	64.710	4.331
-27.4	61.480	4.301
-25.6	58.430	4.269
-23.8	55.550	4.237
-22.0	52.840	4.204
-20.2	50.230	4.170
-18.4	47.770	4.134
16.6	45.450	4.098
-14.8	43.260	4.061
-13.0	41.190	4.023
-11.2	39.240	3.985
-9.4	37.390	3.945
-7.6	35.650	3.905
-5.8	33.990	3.863
-4.0	32.430	3.822
-2.2	30.920	3.778
-0.4	29.500	3.734
1.4	28.140	3.689
3.2	26.870	3.644
5.0	25.650	3.597
6.8	24.510	3.551
8.6	23.420	3.504
10.4	22.390	3.456

Temp.(℉)	Resistance(㏀)	Voltage(V)
12.2	21.410	3.408
14.0	20.480	3.360
15.8	19.580	3.310
17.6	18.730	3.260
19.4	17.920	3.209
21.2	17.160	3.159
23.0	16.430	3.108
24.8	15.740	3.057
26.6	15.080	3.006
28.4	14.450	2.955
30.2	13.860	2.904
32.0	13.290	2.853
33.8	12.740	2.801
35.6	12.220	2.750
37.4	11.720	2.698
39.2	11.250	2.647
41.0	10.800	2.596
42.8	10.370	2.545
44.6	9.959	2.495
46.4	9.569	2.445
48.2	9.195	2.395
50.0	8.839	2.346
51.8	8.494	2.296
53.6	8.166	2.248
55.4	7.852	2.199
57.2	7.552	2.151
59.0	7.266	2.104
60.8	6.992	2.057
62.6	6.731	2.012
64.4	6.481	1.966
66.2	6.242	1.922

Temp.(℉)	Resistance(㏀)	Voltage(V)
68.0	6.013	1.878
69.8	5.792	1.834
71.6	5.581	1.791
73.4	5.379	1.749
75.2	5.185	1.707
77.0	5.000	1.667
78.8	4.821	1.626
80.6	4.650	1.587
82.4	4.487	1.549
84.2	4.329	1.511
86.0	4.179	1.474
87.8	4.033	1.437
89.6	3.894	1.401
91.4	3.760	1.366
93.2	3.631	1.332
95.0	3.508	1.298
96.8	3.390	1.266
98.6	3.276	1.234
100.4	3.167	1.203
102.2	3.062	1.172
104.0	2.962	1.143
105.8	2.864	1.113
107.6	2.770	1.085
109.4	2.680	1.057
111.2	2.593	1.030
113.0	2.510	1.003
114.8	2.429	0.977
116.6	2.352	0.952
118.4	2.278	0.928
120.2	2.206	0.904

Appendix Ⅰ(Reference for circuit diagnostics)

Ref. 7) Service material lists of each circuit board.

NO	CODE-NO	PART NAME	SPECIFCATION	Q'TY
1	DA41-00104M	Main PCB ASS'Y	Dispenser with CoolSelect Zone™	1
2	DA41-00134F	Main PCB ASS'Y	Dispenser	1
3	DA41-00105C	PANEL PCB ASS' Y	Dispenser with CoolSelect Zone™	1
4	DA41-00105D	PANEL PCB ASS' Y	Dispenser	1
5	DA32-00006B	R-DEFROST Sensor	502AT, PX-41C	1
6	DA32-10109V	Ambient Temp. Sensor	502AT, PX-41C	1
7	DA32-10109W	F-Temp.Sensor	502AT, PX-41C	1
8	DA32-00006A	F-DEFROST Sensor	502AT, PX-41C	1
9	DA32-10105U	R-Temp.Sensor	502AT, PX-41C	1
10	DA32-10109X	CoolSelect Zone™ Sensor	502AT, PX-41C	1
11	DA41-00108A	CoolSelect Zone™ PCB ASS' Y	CoolSelect Zone™ MAIN+PANEL	1
12	3301-000016	FERRITE CORE (LOCK TYPE)	-	1
13	DA27-00002A	NOISE FILTER	Commonly used in ET-PJT	1

※ The last no. of the code number such as DA41-xxxxx? for the Main PCB-ASS'Y could be changed by MICOM and option.



SAMSUNG ELECTRONICS

272, Oseon-Dong, Gwangsan-Gu,
Gwangju-City, Korea, 506-253
TEL : 82-62-950-6193, 6896
FAX : 82-62-950-6829

– This Service Manual is a property of Samsung Electronics Co., Ltd.
Any unauthorized use of Manual can be punished under applicable
International or domestic law. –

© Samsung Electronics Co., Ltd.
Refrigerator Division 2004. 02
Printed in Korea