Criterion®

USER MANUAL



TOP MOUNT REFRIGERATOR

7.3 CU FT.
CAPACITY

BEFORE USING YOUR PRODUCT:
Please read this manual carefully & follow all safety rules & operating instructions. Keep this manual for future reference.

Model Number:
CTMR73C1W

SAVE THESE INSTRUCTIONS

Important Safety Information
READ AND FOLLOW ALL SAFETY INSTRUCTIONS

SAFETY REQUIREMENTS

DANGER:Risk of fire or explosion. Flammable refrigerant used. Do not puncture refrigerant tubing.
- Ensure that servicing is done by factory authorized service personnel, to minimize product damage or safety issues.
- Consult repair manual or owner's guide before attempting to service this product. All safety precautions must be followed.
- Dispose of properly in accordance with federal or local regulations.
- Follow handling instructions carefully.
- Do not store explosive substances such as aerosol cans with a flammable propellant in this appliance.

WARNING:
- Keep ventilation openings, in the appliance enclosure or in the built-in structure, clear of obstruction.
- Do not use mechanical devices or other means to accelerate the defrosting process, other than those recommended by the manufacturer.
- Do not damage the refrigerant circuit.
- Do not use electrical appliances inside the food storage compartments of the appliance, unless they are of the type recommended by the manufacturer.

CAUTION:Children should be supervised to ensure that they do not play with the appliance.

DANGER:Risk of child entrapment. Before throwing away an old appliance:
- Remove the door or lid.
- Leave shelves in place so that children may not easily climb inside.

This appliance is not intended for use by persons (including children) whose physical, sensory or mental capabilities may be different or reduced, or who lack experience or knowledge, unless such persons receive supervision or training to operate the appliance by a person responsible for their safety.

This appliance is intended to be used in household and similar applications such as:
- Staff kitchen areas in shops, offices and other working environments;
- Farm houses and by clients in hotels, motels and other residential type environments;
- Bed and breakfast type environments;
- Catering and similar non-retail applications.

GROUNDING INSTRUCTIONS

This appliance must be grounded. Grounding reduces the risk of electrical shock by providing an escape wire for the electrical current.

This appliance has a cord that has a grounding wire with a 3-prong plug. The power cord must be plugged into an outlet that is properly grounded. If the outlet is a 2-prong wall outlet, it must be replaced with a properly grounded 3-prong wall outlet. The serial rating plate indicates the voltage and frequency the appliance is designed for.

WARNING - Improper use of the grounding plug can result in a risk of electric shock. Consult a qualified electrician or service agent if the grounding instructions are not completely understood, or if doubt exists as to whether the appliance is properly grounded.

Do not connect your appliance to extension cords or together with another appliance in the same wall outlet. Do not splice the power cord. Do not under any circumstances cut or remove the third ground prong from the power cord. Do not use extension cords or ungrounded (two prongs) adapters.

If the power supply cord is damaged, it must be replaced by the manufacturer, its service agent or similar qualified person in order to avoid hazard.

SAVE THESE INSTRUCTIONS!

OPERATING INSTRUCTIONS

LOCATION

- Two people should be used when moving the appliance.
- Remove interior and exterior packaging prior to installation. Wipe the outside of the appliance with a soft, dry cloth and the inside with a lukewarm wet cloth.
- Place the appliance on a floor that is strong enough to support it when it is fully loaded.
- Do not place the appliance in direct sunlight or near sources of heat, such as a stove or heater, as this can increase electrical consumption. Extreme cold ambient temperatures may also cause the appliance to perform improperly.
- Do not use the appliance near water, for example in a wet basement or near a sink.
- Before connecting the appliance to a power source, let it stand upright for approximately 6 hours. This will reduce the possibility of a malfunction in the cooling system from handling during transportation.
- This appliance is 55.4 cm (21.8 inches) wide by 143 cm (56.3 inches) high by 55.5 cm (21.9 inches) deep.
- Allow 5 cm (2 inches) of space between the back, sides and top of the appliance and all adjacent walls.
- This appliance is intended for free-standing installation only and is not intended to be built into a cabinet or counter. Building in this appliance can cause it to malfunction.

IMPORTANT

This refrigerator is intended for household use only. It is not designed for outside installation, including anywhere that is not temperature controlled, e.g., garages, porches, vehicles, etc.

FEATURES

1. Magnetic gasket
2. Freezer shelf
3. Temperature control and interior light
4. Refrigerator shelves
5. Refrigerator door shelves
6. Crisper
7. Leveling legs

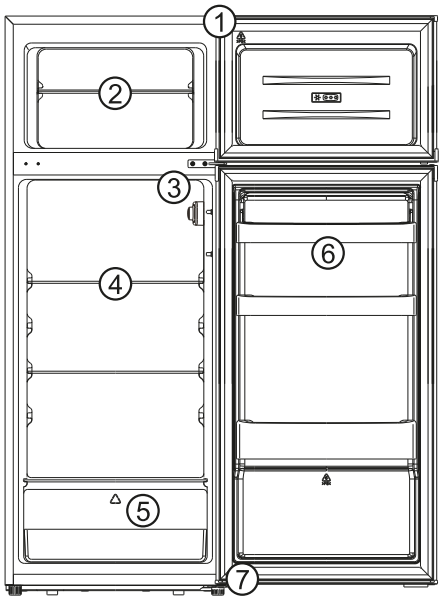

IMPORTANT

Ensure that the door is fully closed when the appliance is in operation. Failure to fully close the door can lead to excessive condensation and potential water damage to flooring under the appliance. Danby will not be responsible for damages from misuse.

OPERATING INSTRUCTIONS

TEMPERATURE CONTROL

The refrigerator control panel is located on the side of the refrigerator compartment.

- Lower numbers indicate warmer temperature settings.
- Higher numbers indicate colder temperature settings.
- When set to 0, the compressor will turn off.
- When set to 7, the compressor will run continuously.
- The recommended setting for regular daily use is 4.
- If the ambient temperature is higher than 38°C (100°F) the recommended setting is 2 - 4.
- If the ambient temperature is lower than 16°C (60°F) the recommended setting is 4 - 6.

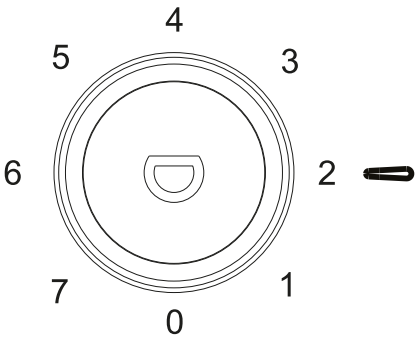

INTERIOR LIGHT

Any replacement or maintenance of the interior incandescent light should be performed by the manufacturer, its service agent or a similar qualified person.

SHELVES

The walls of the refrigerator cabinet are equipped with a series of runners so that the shelves can be positioned as desired.

There are no locks or catch mechanisms, remove a shelf by pulling it all the way out and replace it on the desired runners.

The refrigerator door is equipped with two shelves that can be adjusted for height. To remove a door shelf, gently push upwards but the bottom. Reposition as required and push downward to lock into place.



LEVELING INSTRUCTIONS

There is an adjustable leg on the bottom of the appliance that can be turned up or down to ensure that the appliance is level.

1. Turn the leveling leg counter-clockwise as far as it will go, until the top of the foot is touching the bottom of the cabinet.
2. Slowly turn the leveling leg clockwise until the appliance is level.

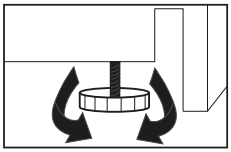

OPERATING INSTRUCTIONS

DOOR REVERSAL INSTRUCTIONS

If the appliance is placed on its back or side for any length of time during this process, it must be allowed to remain upright for 6 hours before plugging it in to avoid damage to the internal components.

1. Remove the cover plate on the top left side of the cabinet. Remove the hinge cover and the upper hinge from the top right side of the cabinet. Remove the freezer door from the cabinet.

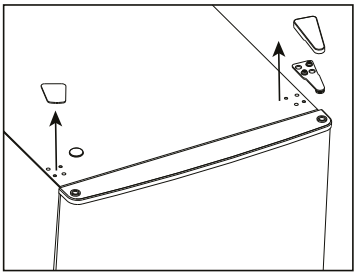

2. Remove the hinge hole cover from the top left side of the door and install it on the top right side of the door.

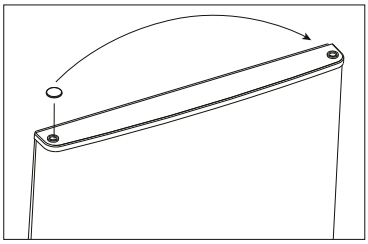

3. Remove the center hinge. Remove the refrigerator door from the cabinet.

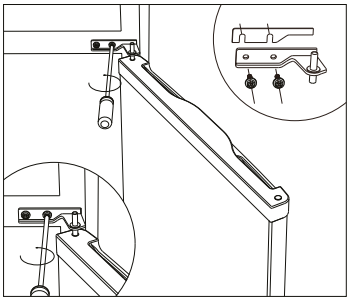

4. Remove the screw hole covers from the left side of the cabinet and install them on the right side of the cabinet.

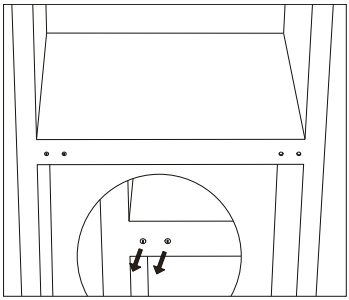

5. Remove the adjustable foot from the lower left side of the cabinet. Remove the hinge from the lower right side of the cabinet.

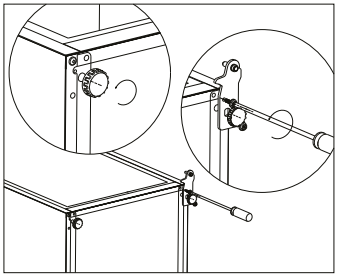

6. Unscrew and remove the bottom hinge pin, turn the hinge over and reinstall it on the other side.

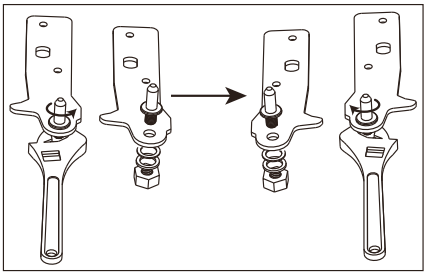

7. Install the bottom hinge on the lower left side of the cabinet. Install the adjustable foot on the lower right side of the cabinet.

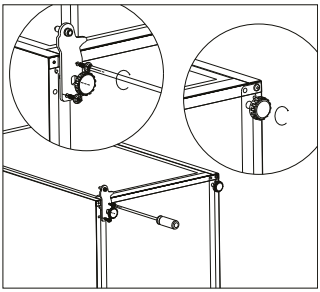

8. Install the door on the cabinet. Install the center hinge.

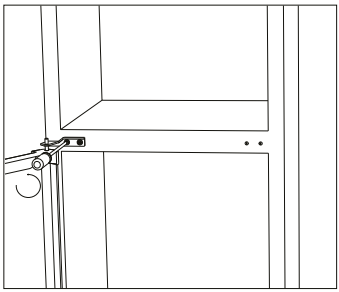

9. Install the freezer door on the cabinet. Install the upper hinge on the top left side of the cabinet. Install the cover plate on the top right side of the cabinet.

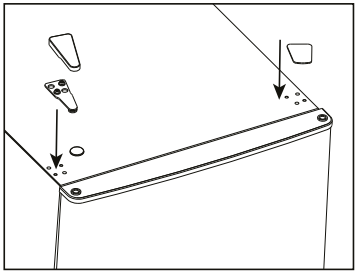

10. Detach the refrigerator and freezer door gaskets, rotate them 180° and then reinstall.

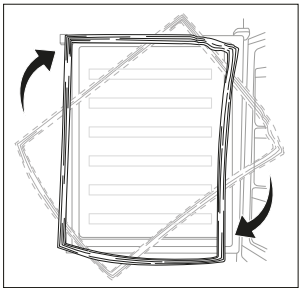

CARE & MAINTENANCE

CLEANING

Ensure the appliance is unplugged before cleaning.

- To clean the inside of the appliance, use a soft cloth and a solution of a tablespoon of baking soda to one quart of water or a mild soap solution or some mild detergent.
- Wash removable shelves in a mild detergent solution, then dry and wipe with a soft cloth.
- Clean the outside with a soft, damp cloth and some mild detergent.
- It is important to keep the area clean where the door seals against the cabinet. Clean this area with a soapy cloth. Rinse with a damp cloth and let dry.

Note: Do not use cleaners containing ammonia or alcohol on the appliance. Ammonia or alcohol can damage the appearance of the appliance. Never use any commercial or abrasive cleaners or sharp objects on any part of the appliance.

POWER FAILURE

Most power failures are corrected within a few hours and should not affect the temperature of your appliance if you minimize the number of times the door is opened. If the power is going to be off for a longer period of time, take the proper steps to protect your contents.

Note: Wait 3 to 5 minutes before attempting to restart the refrigerator if operation has been interrupted.

VACATION

- Short vacations: Leave the appliance operating during vacations of less than three weeks.
- Long vacations: If the appliance will not be used for several months, remove all items and turn off the appliance. Clean and dry the interior thoroughly. To prevent odor and mold growth, leave the door open slightly, blocking it open if necessary.

DEFROSTING INSTRUCTIONS

There is no need to defrost the refrigerator compartment as any ice build up on the back wall will be defrosted automatically. Defrost water from the refrigerator compartment is channeled into a drip tray above the compressor. Heat transfer from the compressor causes the water to evaporate.

The freezer compartment should be defrosted any time the frost reaches 3 - 5 mm (1/4 in) thick.To defrost the freezer compartment, set the thermostat to “OFF”, unplug the appliance and remove all frozen contents. Leave the freezer door open to allow the frost to melt. Discard the melted water and leave the door open until the interior of the freezer is dry.

Remember to protect your floors during the defrosting process by putting towels or a pan under the appliance in case of leaking.

Important: Never use sharp or pointed instruments to remove ice. The freezer compartment contains refrigerated gas lines. If these lines are accidentally pierced it will render the refrigerator inoperable and void the manufacturer's warranty. Do not allow the refrigerator to continue operation if the freezer compartment is pierced.

MOVING

- Remove all contents.
- Turn the adjustable legs up to avoid damage.
- Tape the door shut.
- Be sure the appliance stays in the upright position during transportation. Protect the outside of the appliance with a blanket.
- If the appliance is placed on its back or side during transportation, upon reaching the destination, allow it to remain upright for 6 hours before plugging in to avoid damage to internal components.

DISPOSAL

This appliance may not be treated as regular household waste, it should be taken to the appropriate waste collection point for recycling of electrical components. For information on local waste collection points, contact your local waste removal agency or government office.

FREQUENTLY ASKED QUESTIONS

What are the watts and amps?

Please refer to the rating plate located on the back of the cabinet.

How much does it cost to run the freezer?

Please refer to the energy guide.

Can I use an extension cord?

No, an extension cord may not be used.

I am having trouble opening the door; why?

The refrigerator door may be difficult to open immediately after closing it. This is normal and is due to the pressure difference between the cold interior of the refrigerator and the warm air that has just entered the refrigerator when it was opened. The pressure will equalize within a few minutes.

I had my fridge on its back side to bring it home. Can I use it right away?

Please allow it to sit upright for 6 hours before plugging it in.

The refrigerator smells like new plastic. What can I do?

It is common for new appliances to have a slight plastic smell. Ensure that you have removed all packing material from the fridge. Clean the inside of the cabinet by following the cleaning instructions. Place an open box of baking soda in the refrigerator to absorb any remaining odour.

TROUBLESHOOTING

No power

- A fuse may be blown or the circuit breaker tripped
- Plug not fully inserted into the wall outlet

Internal temperature not cold enough

- Temperature setting is too warm
- The door is not shut properly or opened excessively
- Recently added a large quantity of warm food to the cabinet
- Close proximity to heat source or direct sunlight
- Ambient temperature or humidity is very high

Refrigerator runs continuously

- Temperature setting is too cold
- The door is not shut properly or opened excessively
- Recently added a large quantity of warm food to the cabinet
- Close proximity to heat source or direct sunlight
- Ambient temperature or humidity is very high

Refrigerator makes a gurgling noise when operating

- This noise is completely normal. The refrigerant inside the appliance will make a gurgling noise as it changes from a liquid to a gas and back again.