Amica

OPERATING INSTRUCTIONS EN

Refrigerator-freezer

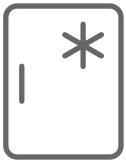

FM104.4

IO-REF-0011/4
(04.2019)

EN- Table of contents

GUIDELINES CONCERNING THE SAFETY OF USE 5
INSTALLATION AND OPERATING CONDITIONS OF THE APPLIANCE 10
INSTALLATION BEFORE USING THE APPLIANCE FOR THE FIRST TIME 10
MINIMUM DISTANCES FROM THE HEAT SOURCES 10
MAINS CONNECTION 11
DISCONNECTING THE MAINS 11
CLIMATE RANGE 11
UNPACKING 12
DISPOSAL OF OLD APPLIANCE 13
CONTROLS 14
APPLIANCE CONTROLS 14
ADJUST TEMPERATURE INSIDE THE APPLIANCE 14
ADDITIONAL INFORMATION ON THE TEMPERATURE 15
LIGHTING 15
REPLACE THE LIGHT BULB 15
OPERATION AND FUNCTIONS 16
STORAGE OF FOOD IN THE FRIDGE-FREEZER 16
FREEZING FOOD** 16
USING THE REFRIGERATOR EFFICIENTLY 18
PRACTICAL EVERYDAY TIPS 18
UNDERSTANDING THE STARS 18
PRACTICAL TIPS 19
FOOD THAT SHOULD NOT BE STORED IN A REFRIGERATOR 19
DEFROSTING, WASHING AND MAINTENANCE 20
DEFROSTING THE FRIDGE*** 20
DEFROSTING THE FREEZER** 20
DEFROST THE FREEZER CHAMBER FOLLOWING STEPS:** 21
AUTOMATIC FRIDGE DEFROSTING**** 21
AUTOMATIC FRIDGE DEFROSTING**** 21
WASHING THE FRIDGE AND FREEZER CHAMBERS MANUALLY**** 21
TAKING OUT AND PUTTING IN THE SHELVES***** 21
TAKING OUT AND PUTTING IN THE DOOR SHELF***** 21
TROUBLE-SHOOTING 22
WARRANTY AND AFTER SALES SERVICE 24
WARRANTY 24

Dear customer,

From now on, your daily housework will be easier than ever before. Your appliance **Amica** is exceptionally easy to use and extremely efficient. After reading these Operating Instructions, operating the appliance will be easy.

Before being packaged and leaving the manufacturer, the appliance was thoroughly checked with regard to safety and functionality.

Before using the appliance, please carefully read these Operating Instructions. By following these instructions carefully you will be able to avoid any problems in using the appliance. It is important to keep these Operating Instructions and store them in a safe place so that they can be consulted at any time.

Follow these instructions carefully in order to avoid possible accidents.

Sincerely,

Amica

GUIDELINES CONCERNING THE SAFETY OF USE

- The appliance is intended for household use only.
- The manufacturer reserves the right to introduce changes which do not affect the operation of the appliance.
- Some provisions in this user manual are unified for refrigerating products of different types (for a refrigerator, refrigerator-freezer or freezer)
- The Manufacturer shall not be held liable for damage arising from the failure to observe the instructions contained in this manual.
- Keep this manual for future reference, or to pass it over to the next user.
- This appliance is not intended for use by persons (including children) with limited physical or mental capabilities and persons who lack experience or familiarity with the appliance.
- Do not allow children to use the appliance. Do not allow them to play with the appliance. They must not climb inside the drawers and swing on the doors.
- The appliance operates properly at the ambient temperature (see product fiche). Do not use it in the cellar, unheated summer cottage during autumn and winter.
- When placing, moving, lifting the appliance, do not hold the door handles, do not pull the condenser at the rear part of the refrigerator and do not touch the compressor unit.
- When transporting, moving or positioning the fridge-freezer do not tilt it by more than 40° from the vertical position. Should such a situation occur, the appliance should be switched on after minimum 2 hours from its replacement in the right position (fig.2).

- Pull the plug out from the mains socket before each maintenance activity. Do not pull on the cord, but hold the body of the plug instead.
- The "cracking" sound, which the appliance may emit is caused by the expansion and contraction of parts as a result of temperature variations.
- For safety reasons do not repair the appliance yourself. Repairs carried out by persons who do not have the required qualifications may result in serious danger for the user of the appliance.
- Air the room in which the appliance is placed for a few minutes (the size of the room for a product containing isobuthane/R600a must be at least $4m^3$) to avoid damage to the cooling system.
- Do not refreeze partly thawed products.
- Do not store beverages in bottles and cans, especially carbonated beverages, in the freezer chamber. The cans and the bottles may explode.
- Do not put frozen products, taken out directly from the freezer (lollies, ice cubes, etc.) into your mouth, their low temperature may cause severe frostbite.
- Make sure you do not damage the cooling system, by puncturing the refrigerant pipes in the evaporator or breaking the pipes. The refrigerant is flammable. If the refrigerant makes contact with the eyes, rinse them with clean water and call for medical assistance immediately.
- If the power wire gets broken, it should be replaced with a new one in a specialist repair shop.
- This appliance is intended for food storage, do not use it for other purposes.
- When performing activities, such as cleaning, maintenance or moving, the appliance must be completely disconnected from power supply (by pulling the plug out from the socket)
- This appliance can be used by children aged 8 years and older or by persons with physical, men-

tal or sensory handicaps, or by those who are inexperienced or unfamiliar with the appliance, provided they are supervised or have been instructed how to safely use the appliance and are familiar with risks associated with the use of the appliance. Ensure that children do not play with the appliance. Cleaning and maintenance of the appliance should not be performed by children unless they are 8 years or older and are supervised by a competent person.

- In order to obtain more space in the freezer, you can remove the drawers and place the food directly on the shelves. This has no effect on the product mechanical properties and cooling performance. Declared freezer capacity was calculated with the drawers removed.



WARNING: Risk of fire / flammable materials

- Children aged from 3 to 8 years are allowed to load and unload refrigerating appliances.

To avoid contamination of food, please respect the following instructions:

- Opening the door for long periods can cause a significant increase of the temperature in the compartments of the appliance.
- Clean regularly surfaces that can come in contact with food and accessible drainage systems.
- Store raw meat and fish in suitable containers in the refrigerator, so that it is not in contact with or drip onto other food.
- Two-star frozen-food compartments are suitable for storing pre-frozen food, storing or making ice-cream and making ice cubes.
- One-, two- and three-star compartments are not suitable for the freezing of fresh food

	Compartments TYPE	Target storage temp.[^{O}C]	Appropriate food
1	Fridge	+2≤+8	Eggs, cooked food, packaged food, fruits and vegetables, dairy products, cakes, drinks and other foods are not suitable for freezing.
2	Freezer ****	≤-18	Seafood (fish, shrimp, shellfish), freshwater aquatic products and meat products (recommended for 3 months, the longer the storage time, the worse the taste and nutrition), suitable for frozen fresh food.
3	Freezer ***	≤-18	Seafood (fish, shrimp, shellfish), freshwater aquatic products and meat products (recommended for 3 months, the longer the storage time, the worse the taste and nutrition), are not suitable for frozen fresh food.
4	Freezer **	≤-12	Seafood (fish, shrimp, shellfish), freshwater aquatic products and meat products (recommended for 2 months, the longer the storage time, the worse the taste and nutrition), are not suitable for frozen fresh food
5	Freezer *	≤-6	Seafood (fish, shrimp, shellfish), freshwater aquatic products and meat products (recommended for 1 months, the longer the storage time, the worse the taste and nutrition), are not suitable for frozen fresh food.
6	0- star compartment	-6≤0	Fresh pork, beef, fish, chicken, some packaged processed foods, etc. (Recommended to eat within the same day, preferably no more than 3 days). Partially encapsulated processed foods (non-freezable foods)
7	Chill	2≤+3	Fresh/frozen pork, beef, chicken, freshwater aquatic products, etc.(7 days below 0°C and above 0°C is recommended for consumption within that day, preferably no more than 2 days). Seafood (less than 0 for 15 days, it is not recommended to store above 0°C)
8	Fresh Food	0≤+4	Fresh pork, beef, fish, chicken, cooked food, etc. (Recommended to eat within the same day, preferably no more than 3 days)
9	Wine	+5≤+20	red wine,white wine,sparkling wine etc.

- Note: please store different foods according to the compartments or target storage temperature of your purchased products.

- If the refrigerating appliance is left empty for long periods, switch off, defrost, clean, dry, and leave the door open to prevent mould developing within the appliance.
- Water dispenser cleaning (special for water dispenser products): Clean water tanks if they have not been used for 48 h; flush the water system connected to a water supply if water has not been drawn for 5 days.
- Pursuant to Commission Regulation (EU) 2019/2019, the minimum availability period for spare parts necessary to repair the appliance is 7 or 10 years depending on the type and purpose of the spare part.
- The list of spare parts and the ordering procedure are available on the websites of the manufacturer, importer or an authorized representative.
- For more information about the product, please refer to the EU EPREL Product Database at https://eprel.ec.europa.eu. For more information, please use your mobile device to scan the QR code on the energy label or enter the product model listed on the energy label in the EPREL search engine https://eprel.ec.europa.eu/

INSTALLATION AND OPERATING CONDITIONS OF THE APPLIANCE

This refrigeration appliance is not intended for use as a built-in appliance.

Installation before using the appliance for the first time

- Take the product out of the package, remove the scotch tape protecting the door and the equipment. Any remaining adhesive stains may be removed with a mild washing agent.
- Do not throw away the polystyrene elements of the packaging. If it is necessary to transport the fridge-freezer, pack it in the polystyrene elements and film as well as protect ing it with scotch tape
- Clean the interior surface of the fridge- freezer and the elements of the equipment with a washing agent dissolved in lukewarm water, then wipe it dry.
- Place the fridge-freezer on an even, flat and stable surface, in dry, aired and shaded room, far from the heat sources such as: oven, hob, central heating radiators, central heating pipes, hot water installation, etc.
- On the exterior surface of the product may be a protective foil, this foils should be removed.
- Make sure the appliance is placed in a horizontal position by screwing in the 2 adjustable front legs (fig. 3)
- To ensure that the door opens freely, the distance between the side of the appliance (on door hinges side) and the wall is shown on figure 5.*
- Ensure adequate ventilation of the room and free air circulation from all sides of the appliance (fig. 6).*

Minimum distances from the heat sources

- from the electric gas and other ovens - 30 mm,
- from oil or coal fired ovens - 300 mm,
- from built-in ovens - 50 mm

If there is no possibility of ensuring the above- mentioned distances, provide an appropriate insulation board.

Warning:
- The rear wall of the refrigerator, in particular, the condenser and other elements of the cooling system must not contact other elements, which may damage them, (e.g. central heating pipes and the water supply pipes).
- It is forbidden to readjust or modify any parts of the unit. It is crucial not to damage the capillary tube visible in the compressor recess. The tube may not be bent, straightened or wound.
- If the capillary tube is damaged by the user the guarantee will be void (fig. 8).
- In some models the handle is put into the appliance, You should screw it with Your own screwdriver,

Mains connection

- Prior to connection, it is recommended to set the temperature control knob to an „OFF" or other position that disconnects the appliance from the power supply (See page with the control description).
- This appliance should be connected to AC 220-240V 50Hz supply socket. The socket must be fitted properly, and must be supplied with an earthing conduit and a 10A fuse.
- It is a legal requirement that the appliance is properly earthed. The manufacturer will not be held liable for any damage or injury which may result from the failure to fulfil this requirement.
- Do not use adapters, multiple sockets and two-wire extension leads. If it is necessary to use the extension lead, it must be equipped with a protection ring and a single socket and must have a VDE/GS safety certificate.
- If an extension lead is used (with a protection ring and safety certificate), its socket must be located at a safe distance, away from the sinks, and must not be in a place where it could be flooded by water or waste water.
- See the type plate at the lower part of the internal wall of the appliance for detailed specifications**.

Disconnecting the mains

Make sure the appliance can be easily disconnected from the mains, either by pulling the plug out of the mains socket, or by switching the two-pole switch off (fig. 9).

Climate range

The information about the climate range of the appliance is provided on the rated plate. It indicates at which ambient temperature (that is, room temperature, in which the appliance is working) the operation of the appliance is optimal (proper).

Climate class		Allowable ambient temperature
SN	Extended Temperate	This refrigeration appliance is intended for use at an ambient temperature ranging between 10°C and 32°C
N	Temperate	This refrigeration appliance is intended for use at an ambient temperature ranging between 16 °C and 32°C
ST	Subtropical	This refrigeration appliance is intended for use at an ambient temperature ranging between 16 °C and 38 °C
T	Tropical	This refrigeration appliance is intended for use at an ambient temperature ranging between 16 °C and 43 °C

* Only free-standing appliances
** According to the model

UNPACKING

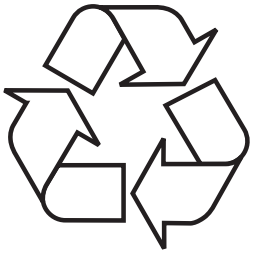

During transportation, protective packaging was used to protect the appliance against any damage. After unpacking, please dispose of all elements of packaging in a way that will not cause damage to the environment.
All materials used for packaging the appliance are environmentally friendly; they are 100% recyclable and are marked with the appropriate symbol.

Important! Packaging materials (bags, polyethylene, polystyrene, etc.) should be kept away from children during unpacking.

DISPOSAL OF OLD APPLIANCE



In accordance with European Directive 2012/19/EU and local legislation regarding used electrical and electronic goods, this appliance is marked with the symbol of the crossed-out waste container. This marking indicates that the appliance must not be disposed of together with other household waste after it has been used.

The user is obliged to hand it over to waste collection centre collecting used electrical and electronic goods. The collectors, including local collection points, shops and local authority departments provide recycling schemes.

Proper handling of used electrical and electronic goods helps avoid environmental and health hazards resulting from the presence of dangerous components and the inappropriate storage and processing of such goods.

CONTROLS

Appliance controls

The control panel is shown in figure 10. For reference it is also shown below:

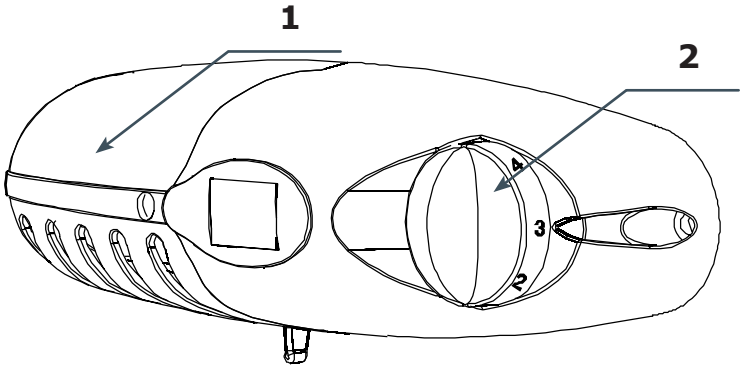

1 — Light
2 — Temperature control dial

Adjust temperature inside the appliance

Turn the dial to adjust the temperature in the appliance:

OFF/0 position	Appliance is off
Setting 1	The highest temperature inside the appliance (warmer)
Settings 2-6	Medium temperature inside the appliance
Setting 7	The lowest temperature inside the appliance (cooler)

Note:

- The temperature control dial in your appliance can be marked differently than in this manual. The general principle of operation is described above.
- If there is no position marked "OFF" or "0" on the dial, turn off your appliance by unplugging the power cord from the wall outlet. Before unplugging set the lowest setting on the temperature control dial.

Additional information on the temperature

- The temperature inside the appliance is influenced by many factors. How you set the temperature control dial depends on the ambient temperature, sun exposure, how often you open the door and the amount of food stored. The middle setting of the dial is most optimal in most cases.
- Do not put food into the fridge freezer before it has reached its operating temperature, which takes minimum 4 hours.
- Do not change the temperature settings due to the change in the season of the year. The ambient temperature increase will be detected by the sensor and the compressor will be switched on automatically for a longer period of time in order to maintain the temperature set inside the chambers.
- The slight changes in temperature are perfectly normal and may occur, for instance during the storage of great quantities of fresh products in the fridge, or when the door is open for a longer period of time. This will not affect the condition of the stored foodstuff, and the temperature will quickly return to its set value.

LIGHTING

This section applies to units factory equipped with incandescent lightbulb and selected appliances equipped with LED lighting with E14 thread.

Replace the light bulb

- Set the knob to "OFF", then unplug the appliance.
- Remove the bulb cover (Fig. 18).
- Replace the bulb with one having identical parameters as the factory installed bulb (E14 thread, 220-240V, maximum dimensions: 26 mm diameter, 55 mm length).
- Replace the bulb cover.
- Bulbs of a higher or lower power should not be used, only use bulbs of the specification given above.

Note:
- The light bulb must not be used for room illumination.
- If Figure 18 is not shown in this manual, light source can only be replaced by a qualified service technician.

OPERATION AND FUNCTIONS

Storage of food in the fridge-freezer

- The products should be placed on plates, in containers or packed in food wrap. Distribute them evenly over the shelves.
- If the food contacts the rear wall, it may cause frosting or wetting of the products.
- Do not put dishes with hot food into the fridge
- Products which absorb flavours easily such as butter, milk, white cheese and products with intense flavour, such as fish, smoked meat, hard cheese must be placed on shelves, packed in food wrap or in tightly sealed containers.
- The storage of vegetables containing significant quantities of water will cause the deposition of condensation on the vegetable containers, it does not impact on the proper functioning of the fridge.
- Before putting the vegetables into the fridge, dry them well.
- Excessive moisture shortens the shelf life of vegetables, especially the leafed vegetables.
- Do not wash the vegetables before storing in the refrigerator. Washing removes the natural protection, therefore it is better to wash the vegetables directly before consumption.
- It is recommended to place the products in freezer drawers 1, 2, 3* up to natural loading capacity (Fig. 11a / 11b).**

1. Packed products
2. Shelf
3. Natural loading capacity
4. ✻***

- Stacking of products on the freezer shelves is acceptable.*
- It is acceptable to place products beyond the natural loading capacity by 20-30 mm.**
- In order to increase the loading capacity of the freezer chamber and allow the stacking of products on the freezer evaporator wire shelves up to maximum height it is possible to remove drawers 1 and 2.*

Freezing food**

- Practically all the food products, except for vegetables consumed raw, such as lettuce can be frozen.
- Only food products of the highest quality, divided into small portions for single use, should be frozen.
- Products should be packed in materials that are odourless, resistant to air and moisture penetration, and not susceptible to fat. Plastic bags, polyethylene and aluminium sheets are the best wrapping materials.
- The packaging should be tight and should stick to the frozen products. Do not use glass containers.
- Keep fresh and warm foodstuff at ambient temperature away from the products, which have already been frozen.
- We advise you not to place more of fresh food at a time to the freezer per day (see table witch technical specification).

- In order to maintain optimum quality of the frozen food, reorganise the food that is in the middle of the freezer, so that it does not touch the products that are not yet frozen.
- It is recommended that you move the already frozen products to one side and place the fresh products that are to be frozen on the opposite side, as close to the rear and side walls as possible.
- To freezing products, use space marked ✻✻✻.
- Bear in mind that the temperature in the freezer is affected by several factors, including the ambient temperature and the quantity of food products in the chamber, the frequency of opening the door, the amount of frost in the freezer, and the thermostat setting.
- If you cannot open the freezer door immediately after closing it, allow 1-2 minutes for the negative pressure to compensate, and try again to open the door.

The storage time for frozen products depends on their quality before freezing when fresh, and on the storage temperature. The following storage periods are recommended when the temperature of -18°C or lower is maintained:

Products	**Months**
Beef	6-8
Veal	3-6
Giblets	1-2
Pork	3-6
Poultry	6-8
Eggs	3-6
Fish	3-6
Vegetables	10-12
Fruit	10-12

Do not store frozen food in rapid cooling chamber. Ice cubes can be prepared and stored in this chamber.

Note: If the appliance does not have a freezer compartment (✻✻✻), it is not suitable for freezing foodstuffs.

* Applicable to appliances with a freezer compartment at the bottom of the appliance.
** Applicable to appliances with a freezer compartment ✻✻✻
*** Not applicable to appliances with a freezer compartment marked ✻✻✻

USING THE REFRIGERATOR EFFICIENTLY

Practical everyday tips

- Do not place fridges or freezers next to radiators, heaters, stoves or in direct sunlight.
- Make sure that air vents are not covered up and clean the dust off them once or twice a year.
- Select the right temperature: 6 to 8°C in your refrigerator and -18°C in your freezer is sufficient.
- When on holiday, turn up the temperature in your fridge.
- Only open your fridge or freezer when necessary. It helps if you know what food each contains and where it is located. Return food to the fridge or freezer as soon as possible after you have used it so that it does not warm up too much.
- Wipe the inside of your fridge regularly with a cloth soaked in a mild detergent. Appliances which are not self-defrosting will require regular defrosting. Do not allow frost layers thicker than 10 mm to form.
- Keep the seal around the door clean, otherwise it will not shut properly. Always replace broken seals.

Understanding the stars



Temperature is at least -6°C; sufficient to store frozen food for about a week. Drawers or compartments marked with one star used to be a feature of (mostly) cheaper fridges.



Food can be stored at -12°C or below for 1-2 weeks without losing its taste. Not suitable for freezing food.



This rating is mainly used to store foods at -18°C or below. Can also be used to freeze up to 1 kilogram of fresh food.



This appliance is suitable for storing foods at -18°C or below and freezing larger quantities of fresh foods.

Practical tips

Due to the natural circulation of the air in the appliance, there are different temperature zones in the refrigerator chamber.

- The coldest area is directly above the vegetables drawers. Use this area for all delicate and highly perishable food e.g.:

- Fish, meat, poultry
- Sausage products, ready meals
- Dishes or baked goods containing eggs or cream
- Fresh dough, cake mixtures
- Pre-packed vegetable and other fresh food with a label stating it should be kept at a temperature of approx 4°C.

- The warmest area is in the top section of the door. Use this for storing butter and cheese.

Food that should not be stored in a refrigerator

- Not all food is suitable for storing in the refrigerator, particularly:

- Fruit and vegetables which are sensitive to cold, such as bananas, avocado, papaya, passion fruit, aubergines, peppers, tomatoes and cucumbers.
- Fruit which is not yet ripe
- Potatoes

Warning:
Example of storing the food - see figure 12.

To achieve the most effective food preservation for the longest possible time and to avoid wasting any food, position the products as shown in Figure 12. In addition, this figure illustrates the layout of drawers, baskets and shelves, which allows the most efficient use of energy.

Optimal temperature and storage conditions will extend product shelf life and optimize electricity consumption. Optimal storage temperature range should be stated on the food product packaging.

DEFROSTING, WASHING AND MAINTENANCE

Never clean the product's casing or plastic parts using solvents or strong, abrasive detergents (e.g. washing powders or creams)! Use mild liquid detergents and soft cloths only. Do not use sponges.

Defrosting the fridge***

- Frost settles on the rear wall of the fridge chamber. It is removed automatically. During the defrosting, the condensate, which contains contaminants may clog the opening in the through. Should it occur, carefully unclog the opening with the cleaning plug (fig. 13).
- The appliance operates in cycles: it refrigerates (then the frost settles on the rear wall), and defrosts (water flows down the rear wall)
- Disconnect the appliance from the mains before cleaning by removing the plug from the mains socket or switching off the fuse. Prevent water from penetrating the control panel or the light.
- Do not use defrosting aerosols. They may cause the formation of an explosive mixture, or contain solvents which may damage the plastic components of the appliance and even be harmful to health.
- Make sure the water used for cleaning does not flow into the evaporation container through the discharge opening.
- The whole appliance, except for the door gasket must be cleaned with a mild cleaning detergent. The door gasket should be cleaned with water and wiped dry.
- Wash all the accessories (vegetable containers, door shelves, glass shelves, etc.).

Defrosting the freezer**

- It is recommended to combine defrosting the appliance with washing it.
- Excessive accumulation of ice on the freezing areas impairs the appliance's freezing capacity and increases the energy consumption.
- Defrost the appliance at least once or twice a year. In case of a higher ice build-up, defrosting must be carried out more frequently.
- If there is food in the freezer, set the knob to the max. position about 4 hours before the planned defrosting. This will ensure the possibility of storing the food at the ambient temperature for a longer time.
- After taking the food out of the freezer, put it in a container, wrap it with several layers of paper, a blanket and store it at a cool place.
- The defrosting operation should last as short as possible. Long storage of food at the ambient temperature shortens their shelf life.

Defrost the freezer chamber following steps:**

- Switch of the appliance using the control panel and pull the plug out from the socket..
- Open the door and remove the food from the freezer.
- Depending on the model, pull out the drainage tube located in the bottom of the freezer compartment and place a suitable vessel underneath.
- Leave the door open, this will speed up the defrost process. Additionally, a pot with hot water (not boiling) may be placed inside the freezer compartment.
- Wash the interior of the freezer and wipe it dry.
- Switch on the appliance as per the relevant point in the manual.

Automatic fridge defrosting****

The fridge chamber has been equipped with an automatic defrosting function. However, frost may settle on the rear wall of the fridge chamber. This happens usually, when large quantities of fresh food products are stored in the fridge.

Automatic fridge defrosting****

The freezer chamber has been equipped with an automatic defrosting function (no-frost). The food is frozen in the cooled circulation air, and the moisture from the freezer chamber is discharged outside. As a result, no ice and frost is produced in the freezer and the products do not freeze on each other.

Washing the fridge and freezer chambers manually****

It is recommended to wash the fridge and freezer chambers at least once a year. This prevents the formation of bacteria and bad odours. Switch off the appliance, using button (1), remove the food from the chambers and wash them using water with a mild detergent. Then, wipe the chambers dry with a cloth.

Taking out and putting in the shelves*****

Slide the shelf out, then slide it in as much as possible so that its clamp could fit the guide groove (fig. 15).

Taking out and putting in the door shelf*****

Lift the door shelf, remove it and put it back from the top into its required position (fig. 16).

WARNING! You must not put an electric heater, a heating fan or a hair dryer into the freezer by any means.

** Applicable to appliances with a freezer compartment ✻✻✻
Not applicable to appliances with a Frost-free System.
*** Applicable to appliances with a refrigerator compartment
Not applicable to appliances with a Frost-free System.
**** Applicable to appliances with a Frost-free System.
***** Does not apply to freezers

TROUBLE-SHOOTING

Problems	Possible causes	Remedies
The appliance does not work	The electric circuit is disrupted	- check whether the plug is properly inserted into the socket - check whether the power cable of the appliance is not damaged - check whether there is voltage in the socket, by plugging another appliance, e.g. a night lamp - check whether the appliance is switched on by setting the thermostat to a position above 0.
The lighting inside the chamber does not work	The bulb is loose or fused (only appliances with bulb lightning type)	- fit the bulb correctly or replace it (see section above "Replacing the interior light bulb)
The appliance works continuously	Incorrect setting of the adjustment knob	- reset the knob to a lower position
	See. "Temperature inside the appliance is not low enough for description of other possible causes	See. "Temperature inside the appliance is not low enough for description of other possible remedies
Water collects in the lower part of the appliance	The water discharge opening is clogged (depending on the model)	- clean the discharge opening (see the operating manual – chapter entitled "Defrosting the fridge")
	Internal air circulation obstructed	- place the food and containers in such a way as that they do not touch the rear wall of the fridge
The appliance generates unusual noise	Incorrect levelling of the appliance	- level the appliance properly
	The appliance is touching furniture and/or other objects	- place the appliance at a location that ensures proper clearances around it

Problems	Possible causes	Remedies
Temperature inside the appliance is not low enough or too high	Incorrect setting of the adjustment knob	- reset the knob to a higher position
	The ambient temperature is higher or lower than the climate range from table with technical specification	- the appliance is adapted to operation in the climate range from table with technical specification.
	The appliance is located in a sunlit place or near heat sources	- move the appliance to another place. Observe the guidelines contained in the manual
	Too much warm food loaded at a time	- wait 72 hours until the food becomes cool (freezes) and the required temperature is reached inside the chamber
	Internal air circulation obstructed	- place the food and containers in such a way that they do not touch the rear wall of the fridge
	The air circulation at the back of the appliance is obstructed	- move the appliance min. 30 mm away from the wall
	The door of the fridge/freezer is opened too often and/or remains open for too long	- reduce the frequency of opening the door and/or shorten the time when door remains open
	The door does not close completely	- place the food and containers so that they would not interfere with door closed
	The compressor is switched on too rarely	- check whether the ambient temperature is not lower than climate class
	Door gasket inserted incorrectly	- press the gasket in

Certain sounds can be heard during normal use of the refrigerator, which do not affect its correct operation.

Sounds, which can be easily prevented:
- noise caused by the appliance which is not level - adjust the position with the adjustable turn-in front feet. Alternatively, place pads made of soft material under the rear rollers, especially when the appliance is placed on tiles.
- touching the adjacent piece of furniture - move the refrigerator away.
- creaking of the drawers or shelves - take out and put back the drawer or shelf.
- sounds of clinking bottles - move bottles apart.

Sounds heard during normal use are mainly due to operation of the thermostat, compressor (switching on) and cooling system (thermal expansion and contraction of the radiator caused by flow of the cooling agent).

WARRANTY AND AFTER SALES SERVICE

Warranty

Warranty service as stated on the warranty card. The manufacturer shall not be held liable for any damage caused by improper use of the product.

Service

- The manufacturer recommends that all repairs and adjustments be carried out by the Factory Service Technician or the Manufacturer's Authorized Service Point. For safety reasons, repairs should be referred to professionals.
- Repairs carried out by unqualified persons may seriously endanger the appliance user.
- The minimum warranty period for the appliance offered by the manufacturer, importer or authorized representative is given in the warranty card.
- The warranty shall be void if you make any independent adaptations or alterations, tamper with seals or other appliance safety devices or its parts or interfere with the appliance contrary to operating instructions.

In the event of appliance malfunction, request assistance or repair.

If your appliance needs repair, please contact the service centre. Please see warranty card for address and contact details of our service centre. Before contacting us, please have ready the appliance serial number, which can be found on the identification sticker! For your convenience, please write it down below:

Manufacturer's Declaration

The manufacturer hereby declares that this product meets the requirements of the following European directives:

- **Low Voltage Directive 2014/35/EC**
- **Electromagnetic Compatibility (EMC) Directive 2014/30/EC**
- **ErP Directive 2009/125/EC**
- **Directive RoHS 2011/65/EC**

and has thus been marked with the CE symbol and been issued with a declaration of compliance made available to market regulators.

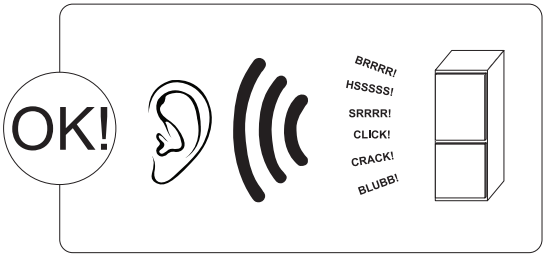
OK!
BRRRR!
HSSSSS!
SRRRR!
CLICK!
CRACK!
BLUBB!

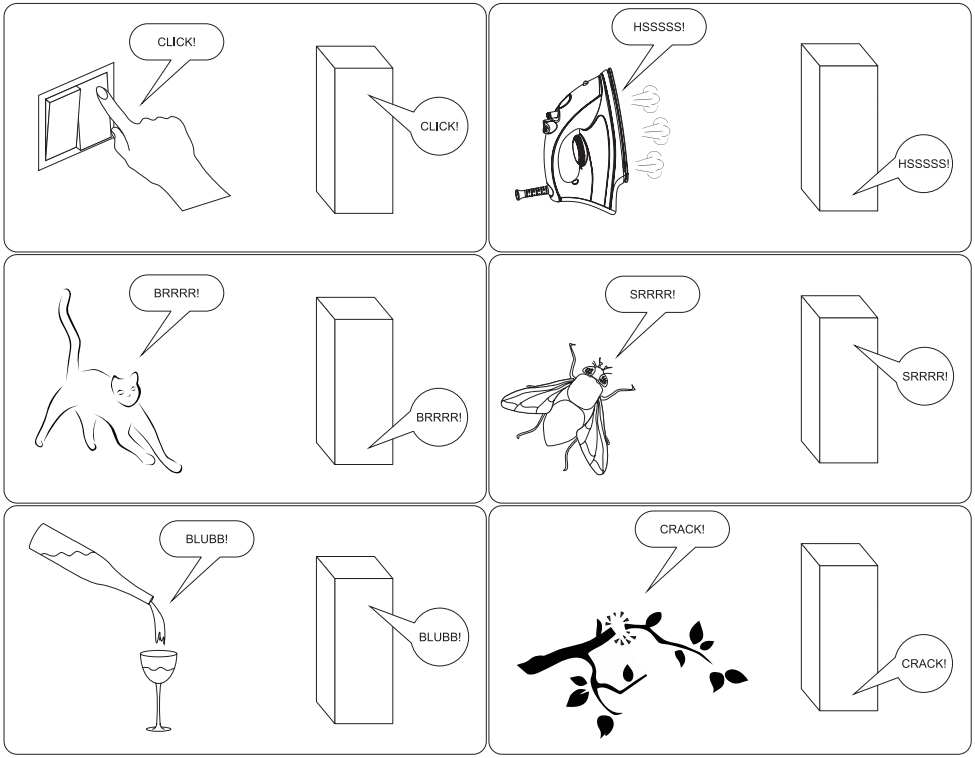
CLICK!
CLICK!
HSSSSS!
HSSSSS!
BRRRR!
BRRRR!
SRRRR!
SRRRR!
BLUBB!
BLUBB!
CRACK!
CRACK!

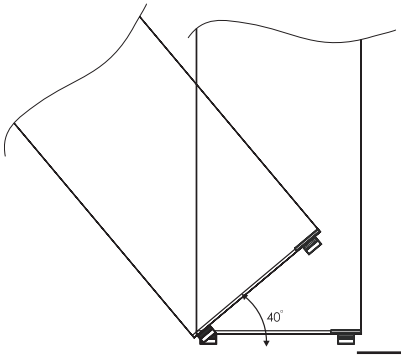

2

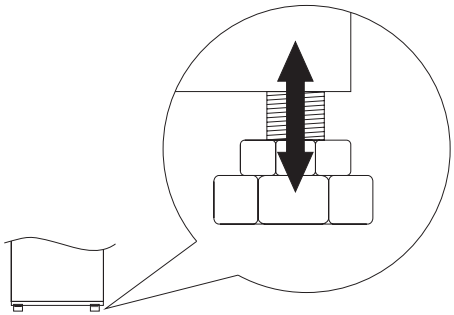

3

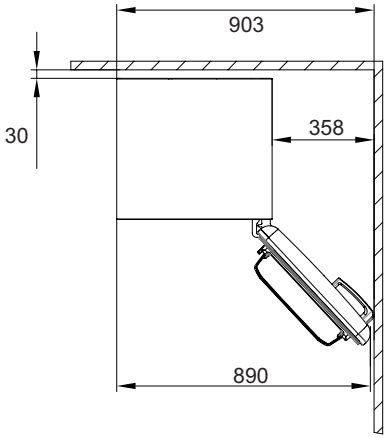

5

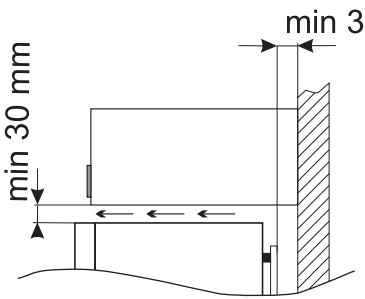

6

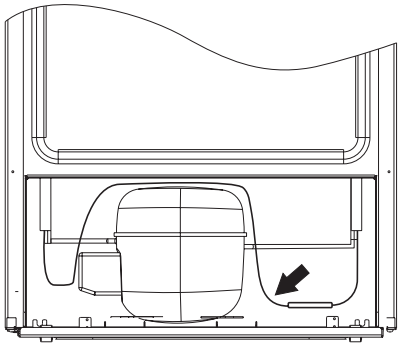

8

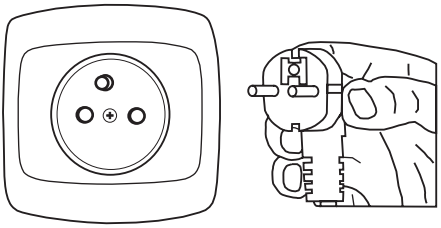

9

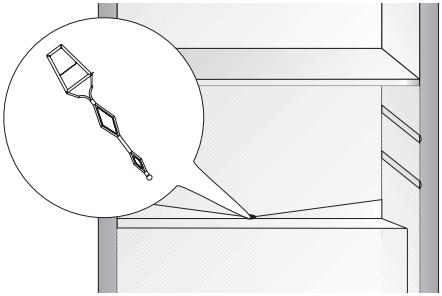

13

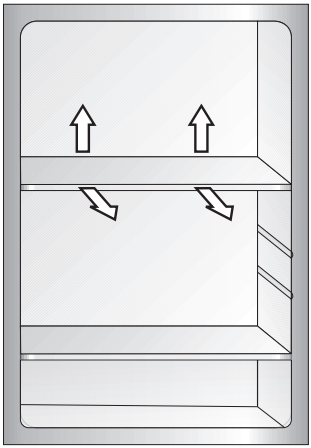

15

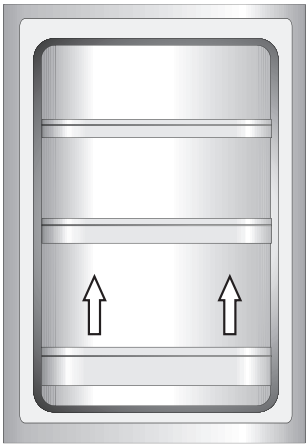

16

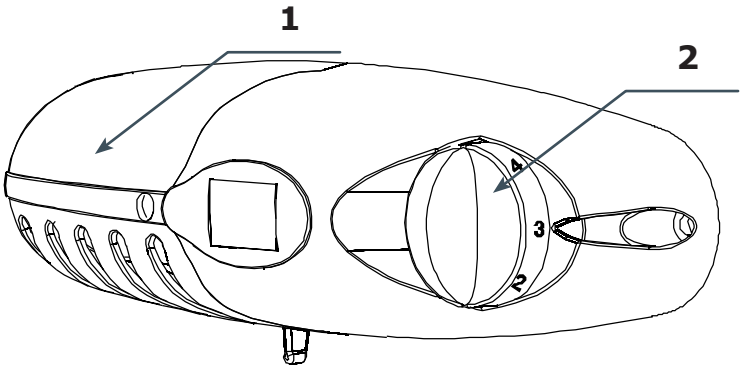

10

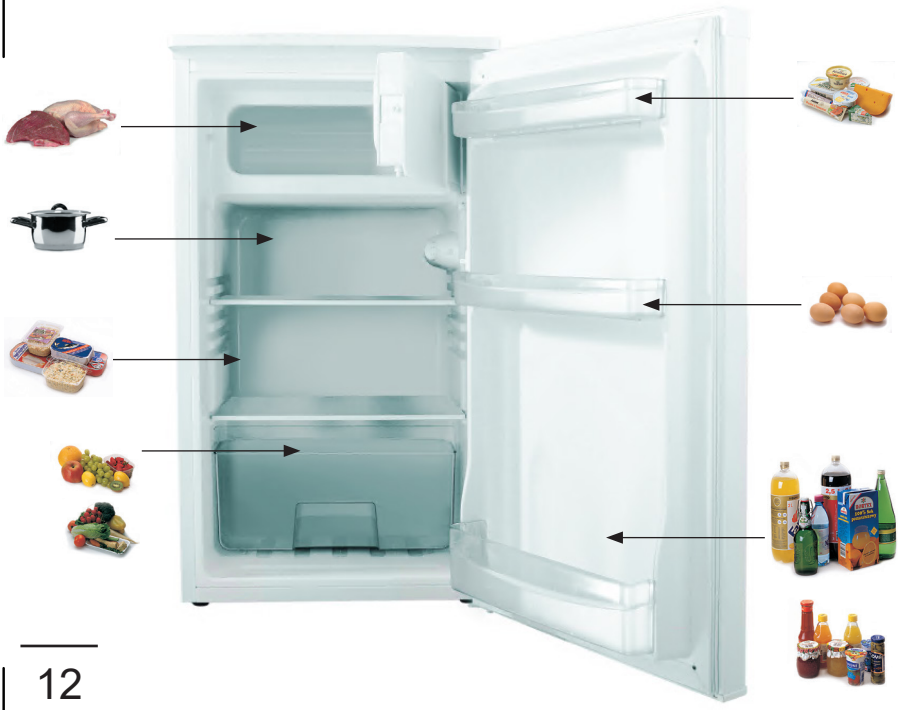

12

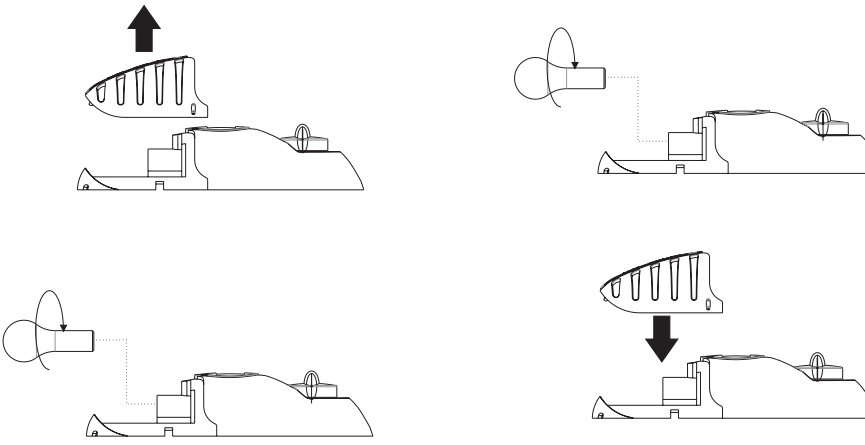

18

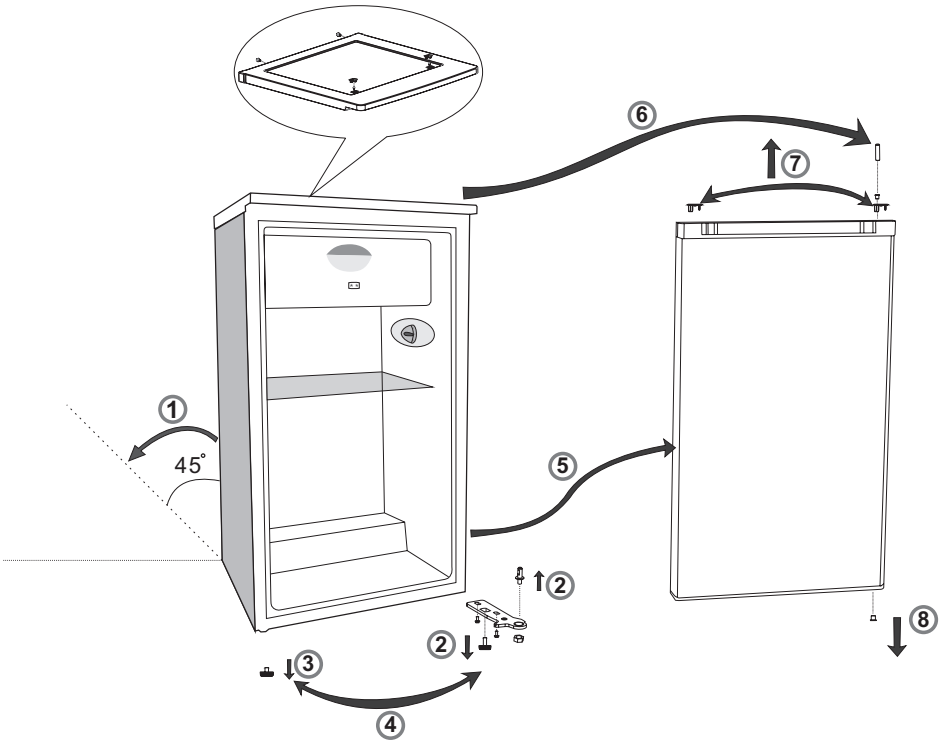
6
7
1
45°
5
2
2
3
4
8

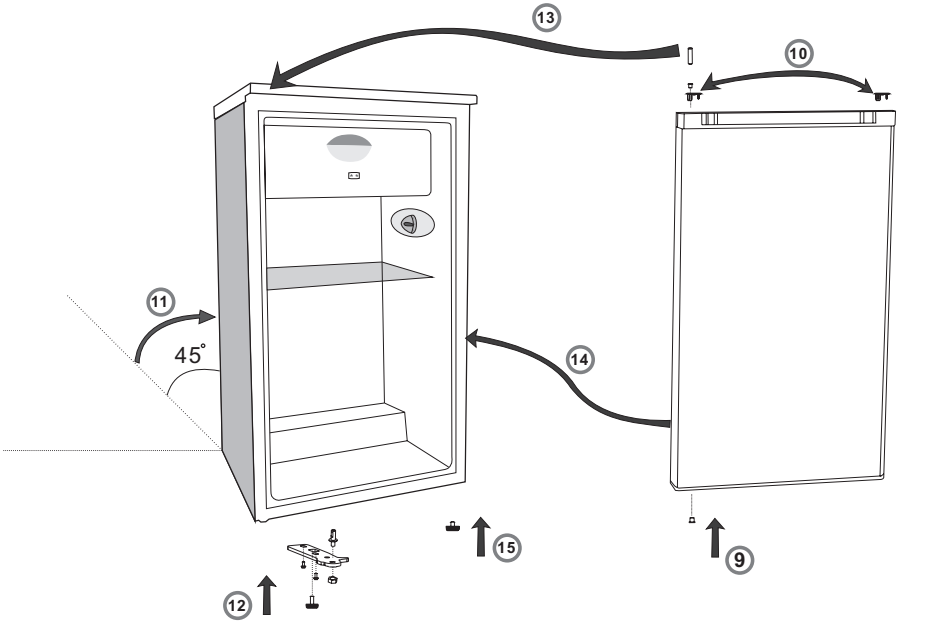
13
10
11
45°
14
15
12
9

Amica S.A.
ul . Mickiewicza 52 / 64-510 Wronki
tel. 67 25 46 100 / fax 67 25 40 320
www.amica.pl

Amica International GmbH
Lüdinghauser Str. 52
D-59387 Ascheberg
Tel: 0 25 93 - 95 67-0
www.amica-group.de