Service Manual

For models N620 and N621:	**6 cu.ft., 2-way, R.V. refrigerators.**
For models N640 and N641:	**6 cu.ft., 2-way or 3-way, R.V. refrigerators.**
For models N640-IM and N641-IM:	**6 cu.ft., 2 way or 3-way, R.V. refrigerators with ice maker.**
For models N820 and N821:	**8 cu.ft., 2-way, R.V. refrigerators.**
For models N840 and N841:	**8 cu.ft., 2-way or 3-way, R.V. refrigerators.**
For models N840-IM and N841-IM:	**8 cu.ft., 2-way or 3-way, R.V. refrigerators with ice maker.**

These model numbers are 2-way refrigerators. The model numbers of 3-way refrigerators include ".3".

NORCOLD, Inc.
P.O. Box 4248
Sidney, OH 45365-4248

Part No. 619394 (5-98)

Table of Contents

Introduction 2
Safety Awareness 2
Safety Instructions 2
Specifications 3
Supply Voltage, Fuse, and Wire Size Requirements 3
Operating Requirements 4
Heater Specifications 4
Other Current Draws 4
Ventilation Requirements 5
Propane Gas Components 5
    Examine the Gas Supply System for Leaks 5
Electrical Components 6
Operating the Refrigerator Controls (models N620, N621, N820, and N821) 6
Operating the Refrigerator Controls (models N640, N641, N640-IM, N641-IM, N840, N841,N840-IM,and N841-IM) . 8
Backup Operating System 9
Fault Codes (models N620, N621, N820, and N821) 10
Fault Codes (models N640, N641, N640-IM, N641-IM, N840, . N841,N840-IM,and N841-IM) 11
Troubleshooting 12
    No Display on Display Panel 12
    Propane Gas ignition Failure 13
    Fresh Food Compartment Door Ajar 14
    AC Power Not Available 14
    AC Voltage Too Low 15
    AC Voltage Too High 15
    DC Voltage Too Low 15
    DC Voltage Too High 16
    AC Heater Output Failure 16
    DC Heater Output Failure 16
    DC Heater Failed Open 17
    AC Heater Failed Open 17
    Flame Sense Circuit Failure 18
    Back Up Operating System 18
Control Diagnostic Function (models N620, N621, N820, and N821) 19
Control Diagnostic function (models N640, N641, N640-IM, N641-IM, N840, N841,N840-IM,and N841-IM) 20
Ice Maker (models N640-IM, N641-IM, N840-IM and N841-IM) 21
    Ice Maker Specifications 21
    Common Problems and Solutions 22
    Trouble Shooting 22
    Ice Maker Does Not Make Ice 23
Refrigerator Maintenance 24
    Gas Flame Appearance 24
    Remove and Clean the Burner Orifice 24
Diagnosing Cooling Problems 24
Fuse Replacement 25
Remove the Refrigerator 25
Reinstall the Refrigerator 25
Wiring Pictorial 26
Wiring Diagram 26
Ice Maker Wiring Pictorial and Diagram (models N640-IM, N641-IM, N840-IM and N841-IM) 26

Introduction

This manual supplies information for the experienced repair technician. The repair technician should have working knowledge of the operation of an absorption refrigerator system and should have basic knowledge of LP gas and electrical systems.

Read the ”Installation Manual”, the “Owner’s Manual”, all service procedures, cautions, and warnings before you do any service work on the refrigerator.

If you are unable to resolve the problem using this Service Manual, technical service support is available at 1-800-543-1219.

Use only genuine Norcold replacement parts on the refrigerator. Generic parts do not meet Norcold’s specifications for reliability, performance and safety and will void the Norcold Limited Warranty.

Safety Awareness

Read this manual carefully and understand the contents before you install the refrigerator.

Be aware of possible safety hazards when you see the safety alert symbol on the refrigerator and in this manual. A signal word follows the safety alert symbol and identifies the danger of the hazard. Carefully read the descriptions of these signal words to fully know their meanings. They are for your safety.

WARNING: This signal word means a hazard, which if ignored, can cause dangerous personal injury, death, or much property damage.

CAUTION: This signal word means a hazard, which if ignored, can cause small personal injury or much property damage.

Safety Instructions

WARNING:

- This refrigerator is equipped for the use of propane gas only and can not be changed to use any other fuels (natural gas, butane, etc.).
- Incorrect installation, adjustment, alteration, or maintenance of this refrigerator can cause personal injury, property damage, or both.
- Obey the instructions in the “Installation Manual” to install the intake and exhaust vents.
- Do not install the refrigerator directly on carpet. Put the refrigerator on a metal or wood panel that extends the full width and depth of the refrigerator.
- Propane gas can ignite and cause a fire or an explosion that can result in property damage, personal injury, or death. Do not smoke or create sparks while doing any work on the propane gas supply system. Do not use an open flame to examine the gas supply piping or fittings for leaks.
- To avoid possible gas leaks, always use two wrenches to tighten or loosen the gas supply line connections.
- Make sure the electrical installation obeys all applicable codes. See the “Certification and Code Requirements” section of the “Installation Manual”.
- Disconnect both the AC and DC power sources before doing any maintenance work on the refrigerator.
- Do not bypass or change the refrigerator’s electrical components or features.

- Do not spray liquids near electrical outlets, connections, or the refrigerator components. Many liquids are electrically conductive and can cause a shock hazard and in some cases fire.

- The refrigerator cooling system is under pressure. Do not try to repair or to recharge a defective cooling system. The cooling system contains sodium chromate. The breathing of certain chromium compounds can cause cancer. The cooling system contents can cause severe skin and eye burns, and can ignite and burn with an intense flame. Do not bend, drop, weld, move, drill, puncture, or hit the cooling system.

- Do not remove the round ground prong from the refrigerator AC power cord. Do not use a two prong adapter or extension cord on the AC power cord.

- A circuit overload can result in an electrical fire if the wires and/or fuse sizes used are not correct. Use only the wire and fuse sizes written in the “Installation Manual”

- To prevent child entrapment, make sure all shelf retainers are correctly fastened and remove the doors before disposing of the refrigerator.

CAUTION:

- The rear of the refrigerator has sharp edges and corners. To prevent cuts or abrasions when working on the refrigerator, use caution and wear cut resistant gloves.

- Make sure all fasteners and connections are tight.

Specifications

Art01005	N8_ _ Models	N6_ _ Models
Storage Volume (cu. ft.)	7.5	6.3
Rough Opening (in.) W x H x D	23 1/2 x 59 7/8 x 24	23 1/2 x 52 7/8 x 24
Certified Vent Kit	Kit # 3	Kit # 3
Certified Venting and Installation	- Vent kit installed wtihout change. - Unobstructed air flow through cooling system. - Clearances (ins.) Top 0-1/4 Sides 0 - 1/2 Rear 0 - 1 Bottom 0	- Vent kit installed wtihout change. - Unobstructed air flow through cooling system. - Clearances (ins.) Top 0-1/4 Sides 0 - 1/2 Rear 0 - 1 Bottom 0
Decorative Door Panel Sizes Thickness - 3/16 in. Upper Door H x W (in.) Lower Door H x W (in.)	 14 17/32 x 21 19/32 38 5/8 x 21 19 /32	 14 17/32 x 21 19/32 31 5/8 x 21 19 /32

Supply Voltage, Fuse, and Wire Size Requirements

Art01006	Models N820, N821, N840, and N840 IM	Models N820.3, N821.3, N840.3, and N840.3 IM	Models N620, N621, N640, and N640 IM	Models N620.3, N621.3, N640.3, and N640.3 IM
DC Supply Voltage	10.5 min. - 15.4 max.	10.5 min. - 15.4 max.	10.5 min. - 15.4 max.	10.5 min. - 15.4 max.
AC Supply Voltage	108 min. - 132 max.	108 min. - 132 max.	108 min. - 132 max.	108 min. - 132 max.
Internal fuses of Refrigerator	DC Control voltage: 3 Amp blade type AC Circuit: 5 Amp 3AG (glass)	DC Control voltage: 3 Amp blade type AC Circuit: 5 Amp 3AG (glass) DC Electric (heater): 30 Amp blade type	DC Control voltage: 3 Amp blade type AC Circuit: 5 Amp 3AG (glass)	DC Control voltage: 3 Amp blade type AC Circuit: 5 Amp 3AG (glass) DC Electric (heater): 30 Amp blade type
DC Supply Wire and Fuse Sizes (If the distance from the battery to the refrigerator is: * 20 ft. or less ** more than 20 ft.)	*18 AWG min. **18 AWG max. * 6 Amp fuse ** 6 Amp fuse	*10 AWG min. **8 AWG max. * 30 Amp fuse ** 40 Amp fuse	*18 AWG min. **18 AWG max. * 6 Amp fuse ** 6 Amp fuse	*10 AWG min. **8 AWG max. * 30 Amp fuse ** 40 Amp fuse

Operating Requirements

Art01007	Models N820, N821, N840, and N840 IM	Models N820.3, N821.3, N840.3, and N840.3 IM	Models N620, N621, N640, and N640 IM	Models N620.3, N621.3, N640.3, and N640.3 IM
Propane Gas Operation Requirements	.0155 Orifice - 12 VDC for operating controls, interior light, moisture reduction heater and gas ignition circuit. - Propane gas at supply pressure of 11 in. W.C.	.0155 Orifice - 12 VDC for operating controls, interior light, moisture reduction heater and gas ignition circuit. - Propane gas at supply pressure of 11 in. W.C.	.015 Orifice - 12 VDC for operating controls, interior light, moisture reduction heater and gas ignition circuit. - Propane gas at supply pressure of 11 in. W.C.	.015 Orifice - 12 VDC for operating controls, interior light, moisture reduction heater and gas ignition circuit. - Propane gas at supply pressure of 11 in. W.C.
AC Electric Operation Requirements	- 12 VDC for operating controls, interior light, and moisture reduction heater. - 120 VAC, 60 Hertz for AC heater.	- 12 VDC for operating controls, interior light, and moisture reduction heater. - 120 VAC, 60 Hertz for AC heater.	- 12 VDC for operating controls, interior light, and moisture reduction heater. - 120 VAC, 60 Hertz for AC heater.	- 12 VDC for operating controls, interior light, and moisture reduction heater. - 120 VAC, 60 Hertz for AC heater.
DC Electric Operation Requirements	- 12 VDC for operating controls, interior light, and moisture reduction heater.	- 12 VDC for operating controls, interior light, moisture reduction heater, and DC heater.	- 12 VDC for operating controls, interior light, and moisture reduction heater.	- 12 VDC for operating controls, interior light, moisture reduction heater, and DC.heater.

Heater Specifications

Art01008	Models N820, N821, N840, and N840 IM	Models N820.3, N821.3, N840.3, and N840.3 IM	Models N620, N621, N640, and N640 IM	Models N620.3, N621.3, N640.3, and N640.3 IM
AC Heater Watts / Amps / Ohms (Ohms reading +/ -5%)	300 / 2.7 / 40.3	300 / 2.7 / 40.3	300 / 2.7 / 40.3	300 / 2.7 / 40.3
DC Heater Watts / Amps / Ohms (Ohms reading +/ -5%)		225 / 16 / .87		225 / 16 / .87

Other Current Draws

Art01009	Models N820, N821, N840, and N840 IM	Models N820.3, N821.3, N840.3, and N840.3 IM	Models N620, N621, N640, and N640 IM	Models N620.3, N621.3, N640.3, and N640.3 IM
Automatic Ignition	.50 Amp	.50 Amp	.50 Amp	.50 Amp
Moisture Reduction Heater	.11 to .17 Amp	.11 to .17 Amp	.11 to .17 Amp	.11 to .17 Amp
Interior Light	.60 Amp	.60 Amp	.60 Amp	.60 Amp
Gas Valve	.14 Amp	.14 Amp	.14 Amp	.14 Amp

Ventilation Requirements

WARNING: The completed installation must:

- Make sure there is sufficient intake of fresh air for combustion.
- Make sure the living space is completely isolated from the combustion system of the refrigerator.
- Make sure there is complete and unrestricted ventilation of the flue exhaust which, in gas mode, can produce carbon monoxide. The breathing of carbon monoxide fumes can cause dizziness, nausea, or in extreme cases, death.

Certified installation needs one lower intake vent and one upper exhaust vent. Install the vents exactly as instructed in the “Installation Manual”. Any other installation method voids both the certification and the factory warranty of the refrigerator.

The bottom of the opening for the lower intake vent, which is also the service access door, must be even with or immediately below the floor level. This allows any leaking LP gas to escape to the outside and not to collect at floor level.

If the vehicle has two side wall vents, the minimum distance from the floor level to the top of the upper exhaust vent is 55 inches on N6__ models and 62 inches on N8 __ models.

American Gas Association/Canadian Gas Association (AGA/CGA) certification allows the refrigerator to have zero (0) inch minimum clearance at the sides, rear, top, and bottom. While there are no maximum clearances specified for certification, the following maximum clearances are necessary for correct refrigeration:

Bottom	0 inch min.	0 inch max.
Each Side	0 inch min	1/2 inch max.
Top	0 inch min.	1/4 inch max.
Rear	0 inch min.	1 inch max.

These clearances plus the lower and upper vents cause the natural air draft that is necessary for good refrigeration. Cooler air goes in through the lower intake vent, goes around the refrigerator coils where it removes the excess heat from the refrigerator components, and goes out through the upper exhaust vent. If this air flow is blocked or decreased, the refrigerator may not cool correctly.

Each NORCOLD model is certified by AGA and CGA for correct ventilation.

Propane Gas Components

This refrigerator operates on propane gas at a pressure of 10.5 inches Water Column min. to 11.5 inches Water Column max.

WARNING: Be very careful when working on or near the propane gas system.

- Do not smoke, or use an open flame near the propane gas system.
- Do not use an open flame to examine for leaks.
- Do not connect the refrigerator to the propane gas tank without a pressure regulator between them.
- To avoid possible propane gas leaks, always use two wrenches to tighten or loosen the gas supply line connections.
- Leaking propane gas can ignite or explode and result in dangerous personal injury or death.

Examine the gas supply system for leaks:

WARNING: Do not allow the leak detecting solution to touch the electrical components. Many liquids are electrically conductive and can cause a shock hazard, electrical shorts, and in some cases fire.

Using a solution of liquid detergent and water, make sure the gas supply line and all gas connections have no leaks. Do not use any liquid that contains ammonia.

If you use compressed air for the test:

- The pressure of the compressed air at the manual shutoff valve of the refrigerator must not be more than 1/2 psig (14 inches Water Column).
- If the pressure of the compressed air is more than 1/2 psig (14 inches Water Column), remove the gas supply line from the manual shutoff valve of the refrigerator before the test.
- If the pressure of the compressed air is equal to or less than 1/2 psig (14 inches Water Column), close the manual shutoff valve of the refrigerator before the test.

Electrical Components

This refrigerator operates on these electrical sources.

AC Operation	120 volts AC voltage (108 volts min. - 132 volts max.) 12 volts DC control voltage (10.5 volts min. - 15.4 volts max.)
DC Operation (3-way models)	12 volts DC voltage (10.5 volts min. - 15.4 volts max.)

Operation out of these limits may damage the refrigerator's electrical circuit parts and will void the warranty.

Examine the 120 volts AC supply:

WARNING: Connect the AC power cord only to a grounded three-prong receptacle. Do not remove the round ground prong from the power cord. Do not use a two-prong adapter or an extension cord. Operation of the refrigerator without a correct ground could cause dangerous electrical shock or death if you are touching the metal parts of the refrigerator or the vehicle.

- Make sure the AC power cord is in a grounded three-prong receptacle.
- Make sure the receptacle is within easy reach of the lower intake vent.
- Make sure the power cord does not touch the burner cover, the flue pipe, or any hot component that could damage the insulation of the power cord.

Examine the 12 volt DC supply:

The refrigerator gets power from the 12 volt system of the vehicle; either from the battery or from an auxiliary (house) battery. The battery system not only supplies DC power to the refrigerator, but also to other components of the vehicle.

The DC heating element, which supplies power for cooling during DC operation, has a high current draw and can cause rapid battery drain.

Make sure the wire size and fuse size are correct:

- On 2-way models, use a minimum of 18 AWG wire and a maximum 6 Amp fuse.
- On 3-way models, measure the distance from the vehicle battery to the refrigerator.
    - If the distance is 0 - 20 feet, use a minimum of 10 AWG wire and a 30 Amp fuse.
    - If the distance is over 20 feet, use a minimum of 8 AWG wire and a maximum 40 Amp fuse.
- If the wire size is larger than the min. size, use the correct fuse per RVIA A119.2 standard or local codes.
- Make sure the positive DC wire from the battery is connected to the power board terminal that is marked 12VDC.
- Make sure the DC ground wire from the battery is connected to the power board terminal that is marked 12V GND1.
- Make sure each DC power supply wire is on the correct polarity terminal.
- Make sure an in-line fuse is installed on the DC positive wire, as near the battery as possible, between the battery and the terminal block of the refrigerator.

NOTE: This in-line fuse is necessary for added safety, even though the refrigerator has a DC fuse in the control assembly.

Operating the Refrigerator Controls (models N620, N621, N820, and N821)

Control panel:

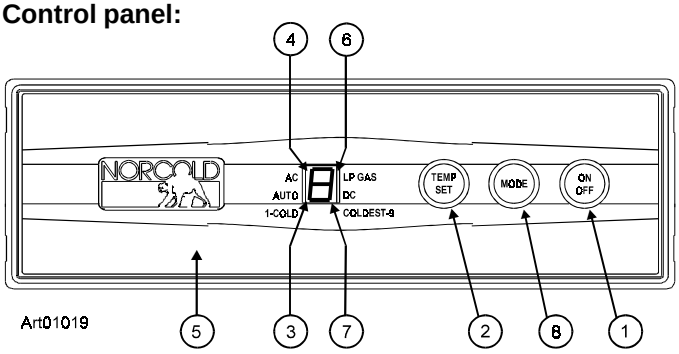

The refrigerator control panel (see Art01019) is between the freezer compartment and the fresh food compartment. To maintain the operating control functions of the refrigerator, a 12 volt DC power supply is necessary. The refrigerator and any other DC components in the vehicle, receive DC power from the 12 volt system of the vehicle; either an auxiliary battery, a converter, or the vehicle engine battery.

The ON / OFF button [1] starts and shuts down the refrigerator:

- If the refrigerator is shut down, press the ON / OFF button to start the refrigerator in auto mode.
- If the refrigerator is operating, press and hold the ON / OFF button for two seconds to shut down the refrigerator.

The TEMP SET button [2] controls the temperature adjustment of the freezer and the fresh food compartment. The temperature adjustment that you select does not change if the mode of operation of the refrigerator changes.

- Push the TEMP SET button and the temperature setting "1-9" appears in the center display [3].
- Push and hold the TEMP SET button and the temperature setting changes.
    - The number "9" is the coldest temperature setting.

The MODE button [8] controls the operation mode of the refrigerator.

- Push and hold the MODE button and a light bar flashes in the center display beside each of the four operating modes of the refrigerator, one at a time.
    - There is one automatic mode of operation and three manual modes of operation.
    - When the light bar flashes beside the mode of operation that you wish, release the MODE button.

Automatic mode operation:

When you select AUTO mode, the refrigerator controls automatically select the most efficient energy source that is available for operation. If a more efficient energy source becomes available, the refrigerator controls change from the current energy source to the more efficient energy source.

The controls select the energy source in this sequence:

- When 120 volts AC is available to the refrigerator:
    - The light bars beside AUTO [3] and AC [4] show in the center display.
    - After ten seconds, the light bar beside AC goes off and only the light bar beside AUTO remains.
    - This means that the refrigerator is operating on AC electric.
- If 120 volts AC is not available to the refrigerator:
    - The light bars beside AUTO and LP GAS [6] show in the center display.
    - After ten seconds, the light bar beside LP GAS goes off and only the light bar beside AUTO remains.
    - This means that the refrigerator is operating on propane gas.

If an energy source is available to the refrigerator, but is not operating correctly:

- A fault code appears in the center display.
- The refrigerator controls try to change to a less efficient energy source.
- If a less efficient energy source is not available:
    - The refrigerator stops operation.
    - Refer to the “Fault Codes” section of this manual.

Manual mode operation:

When you select one of the manual modes of operation, The light bar beside the AUTO goes out in the center display and only the light bar beside either AC, LP GAS, or DC remains.

- AC means that the refrigerator is operating on AC electric.
- LP GAS means that the refrigerator is operating on propane gas.

If the energy source is interrupted:

- The refrigerator stops operation.
- Refer to the “Fault Codes” section of this manual.

Ignition of LP gas in either auto or manual mode:

NOTE: On initial start up of the refrigerator, ignition of the propane gas may not occur within 30 seconds.

If ignition of the propane gas does not occur within 30 seconds:

- The gas safety valve of the refrigerator closes.
- The refrigerator stops operation.
- Refer to the “Fault Codes“ section of this manual.
- The fault code remains until you push the ON / OFF button two times (to stop and start the refrigerator).
- If ignition does not occur after two or three times:
    - Check the gas supply line.
    - Refer to the “Gas Ignition Fault” chart that is in the “Troubleshooting” section this manual.

Operating the Refrigerator Controls (models N640, N641, N640-IM, N641-IM, N840, N841, N840-IM, and N841-IM)

Control panel:

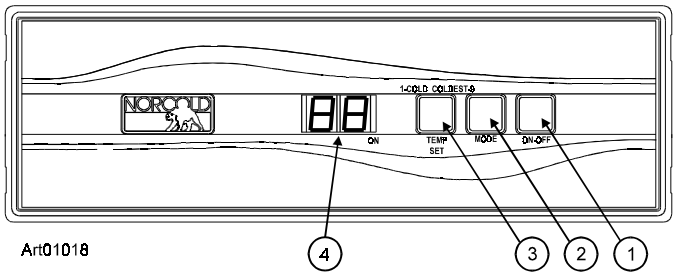

The refrigerator control panel (See Art01018) is between the freezer compartment and the fresh food compartment. To maintain the operating control functions of the refrigerator, a 12 volt DC power supply is necessary. The refrigerator and any other DC components in the vehicle, receive DC power from the 12 volt system of the vehicle; either an auxiliary battery, a converter, or the vehicle engine battery.

The ON / OFF button [1] starts and shuts down the refrigerator:

- If the refrigerator is shut down, push the ON / OFF button to start the refrigerator in auto mode.
- If the refrigerator is operating, push and hold the ON / OFF button for two seconds to shut down the refrigerator.

The TEMP SET button [3] controls the temperature adjustment of the freezer and the fresh food compartment. The temperature adjustment that you select does not change if the operation mode of the refrigerator changes.

- Push the TEMP SET button and the temperature setting “1-9” appears in the center display [4].
- Push and hold the TEMP SET button and the temperature setting changes.
    - The number “9” is the coldest temperature setting.

The MODE button [2] controls the operation mode of the refrigerator:

- Push and hold the MODE button and each of the four operating modes of the refrigerator flash one at a time in the center display.
    - There is one automatic mode of operation and there are three manual modes of operation.
    - When the mode of operation that you wish shows in the center display, release the MODE button.

Automatic mode operation:

When you select AUTO mode, the refrigerator controls automatically select the most efficient energy source that is available for operation. If a more efficient energy source becomes available, the refrigerator controls change from the current energy source to the more efficient energy source.

The controls select the energy source in this sequence:

- When 120 volts AC is available to the refrigerator:
    - “AU” “AC” flashes in the center display.
    - This means that the refrigerator is operating on AC electric.
    - After ten seconds, the “AU” “AC” goes off and only a power indicator remains.
- If 120 volts AC is not available to the refrigerator:
    - “AU” “LP” flashes in the center display.
    - This means that the refrigerator is operating on propane gas.
- On 3-Way models only, if neither 120 volts AC nor propane gas is available to the refrigerator:
    - “AU” “dc” flashes in the center display.
    - This means that the refrigerator is operating on DC electric.

    NOTE: DC electric operation is less efficient than AC electric and propane gas. Use DC electric operation only to maintain the refrigerator temperature while in transit and if the other energy sources are not available. Do not use DC electric to initially decrease the temperature of the refrigerator.

If an energy source is available to the refrigerator, but is not operating correctly:

- A fault code shows in the center display.
- The refrigerator controls try to change to a less efficient energy source.
- If a less efficient energy source is not available:
    - An audible alarm starts.
    - The refrigerator stops operation.
    - Refer to the “Fault Codes” section of this manual.

Manual mode operation:

When you select one of the three manual modes, “AU” goes out in the center display and either “AC”, “LP”, or “dc” appears.

- “AC” means that the refrigerator is operating on AC electric.
- “LP” means that the refrigerator is operating on propane gas.
- “dc” means that the refrigerator is operating on DC electric.

If the energy source is interrupted:

- An audible alarm starts.
- The refrigerator stops operation.
- Refer to the “Fault Codes” section of this manual.

Ignition of propane gas in either auto or manual mode:

NOTE: On initial start up of the refrigerator, ignition of the propane gas may not occur within 30 seconds.

If ignition of the propane gas does not occur within 30 seconds:

- The gas safety valve of the refrigerator closes.
- In the Auto mode:
  - The refrigerator control changes to a less efficient energy source (3-way models only).
  - The fault code “no” “FL” shows in the center display (2-way models only).
- In the Manual mode and operating on propane gas:
  - An audible alarm starts.
  - The fault code “no” “FL” shows in the center display.
  - The audible alarm and the fault code remain until you push the MODE button.
  - Push the ON/OFF button two times to stop and start the refrigerator.
- If ignition does not occur after two or three times:
  - Check the gas supply line.
  - Refer to the “Propane Gas Ignition Fault” chart that is in the “Troubleshooting” section this manual.

Backup Operating System

This refrigerator has a backup operating system. The backup operating system allows the refrigerator to continue to cool if the temperature sensor of the refrigerator should fail.

If this failure occurs:

- The refrigerator automatically changes to the backup operating system.
  - When you push the TEMP SET button, the temperature setting flashes in the center display for ten seconds.
  - After the temperature setting flashes, the mode of operation appears in the center display.
- The backup operating system can over freeze or thaw the contents of the freezer and the fresh food compartment.
  - Make sure the temperatures of the freezer and the fresh food compartment are satisfactory.

  NOTE: If you open the door(s) too often, the temperatures inside the freezer and fresh food compartment do not become stable. Allow the refrigerator to operate for about one hour after each adjustment change before you examine the contents. The number “9” is the coldest temperature setting.
  - If the temperature is too warm, push and hold the TEMP SET button to raise the temperature setting by one number.
  - If the temperature is too cold, push and hold the TEMP SET button to lower the temperature setting by one number.
- The owner should have the refrigerator serviced by a dealer or an Norcold authorized Service Center as soon as possible.

Fault Codes (models N620, N621, N820, and N821)

Fault Codes	Fault Code Meaning	Corrective Action Refer to the chart that is in the "Trouble Shooting" section of this manual.
No display.	DC voltage is unavailable to the refrigerator control panel or the refrigerator is OFF.	Turn refrigerator ON. Refer to " No Display On Control Panel".
"d"	The food compartment door was open for more than two minutes.	Refer to "Fresh Food Compartment Door Ajar".
"F"	The burner did not ignite or reignite.	Refer to "LP Gas Ignition Failure".
"A"	AC voltage is unavailable to the refrigerator control panel.	Refer to "AC Power Not Available".
"E"	DC voltage to the refrigerator control panel is too high.	Refer to "DC Voltage is Too High".
"C"	DC voltage to the refrigerator control panel is too low.	Refer to "DC Voltage is Too Low".
"H"	AC relay is stuck closed.	Refer to "AC Heater Output Fault"
"P"	AC heater has failed open.	Refer to "AC Heater Failed Open".
"S"	Flame sense circuit has failed.	Refer to "Flame Sense Circuit Failure".
When you push any button, the temperature setting flashes for ten seconds and then the mode appears.	The refrigerator is operating on the "Back Up Operating System".	Refer to "Back Up Operating System". Art01053

Fault Codes (models N640, N641, N640-IM, N641-IM, N840, N841, N840-IM, and N841-IM)

Fault Codes	Fault Code Meaning	Corrective Action Refer to the chart that is in the "Trouble Shooting" section of this manual.
No display.	DC voltage is unavailable to the refrigerator control panel or the refrigerator is OFF.	Turn refrigerator ON. Refer to " No Display On Control Panel".
"dr" Audible alarm also.	The food compartment door was open for more than two minutes.	Push the MODE button to silence the alarm. Refer to "Fresh Food Compartment Door Ajar".
"no" "FL" Audible alarm also.	The burner did not ignite or reignite.	Push the MODE button to silence the alarm. Refer to "LP Gas Ignition Failure".
"no" "AC" Audible alarm also.	AC voltage is unavailable to the refrigerator control panel.	Push the MODE button to silence the alarm. Refer to "AC Power Not Available".
"AC" "LO"	AC voltage to the refrigerator control panel is too low.	Refer to "AC Voltage is Too Low".
"AC" "HI"	AC voltage to the refrigerator control panel is too high.	Refer to "AC Voltage Is Too High".
"dc" "LO"	DC voltage to the refigerator control panel is too low.	Refer to "DC Voltage Is Too Low".
"dc" "HI"	DC voltage to the refrigerator control panel is too high.	Refer to "DC Voltage Is Too High".
"AC" "rE" Audible alarm also.	AC relay is stuck closed.	Push the MODE button to silence the alarm. Refer to "AC Heater Output Fault"
"dc" "rE Audible alarm also.	DC relay is stuck closed.	Push the MODE button to silence the alarm. Refer to "DC Heater Output Fault"
"AC" "HE" Audible alarm also.	AC heater has failed open.	Push the MODE button to silence the alarm. Refer to "AC Heater Failed Open".
"dc" "HE" Audible alarm also.	DC heater has failed open.	Push the MODE button to silence the alarm. Refer to "DC Heater Failed Open".
"Sr" Audible alarm also.	Flame sense circuit has failed.	Push the MODE button to silence the alarm. Refer to "Flame Sense Circuit Failure".
When you push any button, the temperature setting flashes for ten seconds and then the mode appears.	The refrigerator is operating on the "Back Up Operating System".	Refer to "Back Up Operating System". Art01054

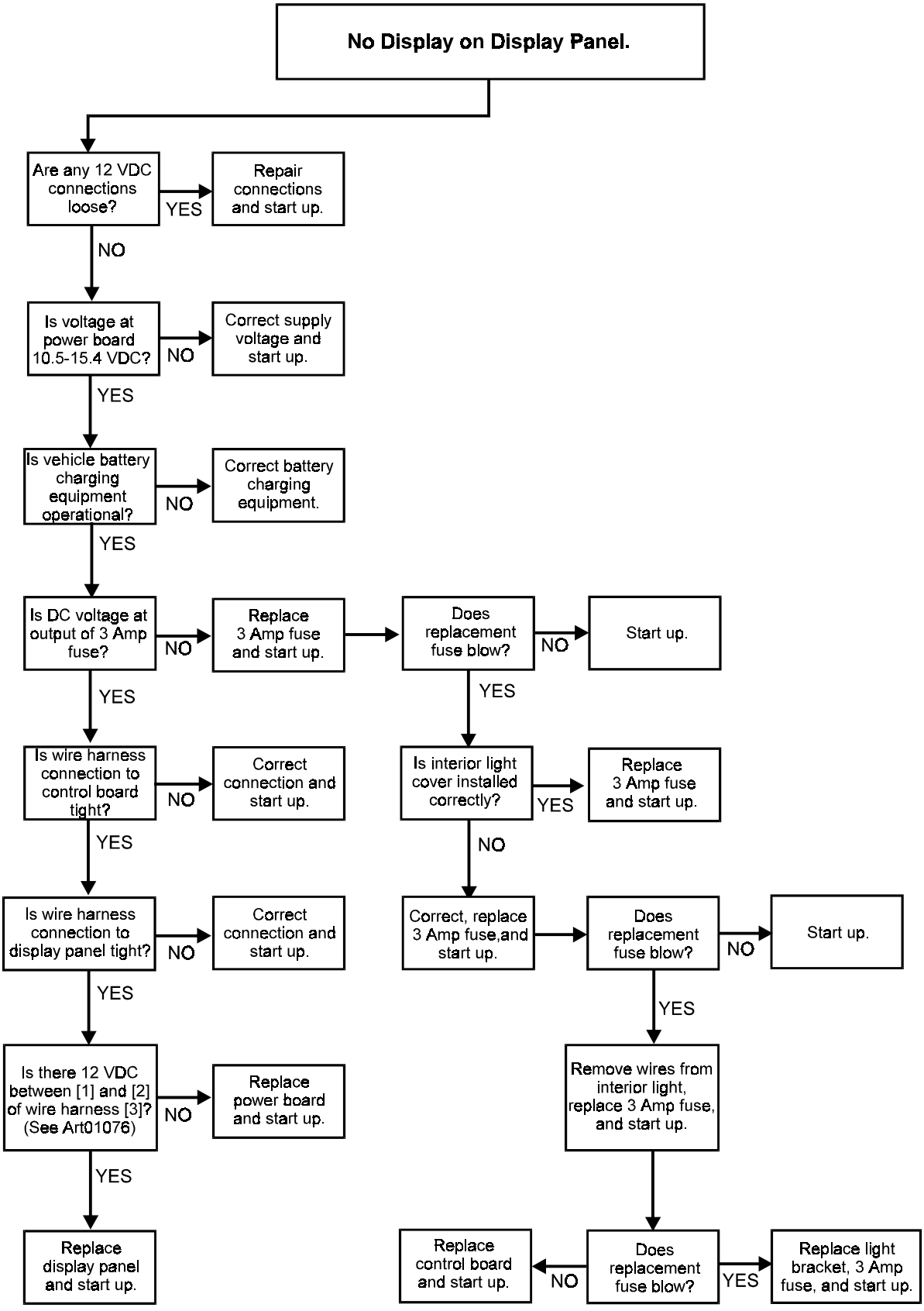
No Display on Display Panel.
Are any 12 VDC connections loose?
YES
Repair connections and start up.
NO
Is voltage at power board 10.5-15.4 VDC?
NO
Correct supply voltage and start up.
YES
Is vehicle battery charging equipment operational?
NO
Correct battery charging equipment.
YES
Is DC voltage at output of 3 Amp fuse?
NO
Replace 3 Amp fuse and start up.
Does replacement fuse blow?
NO
Start up.
YES
YES
Is wire harness connection to control board tight?
NO
Correct connection and start up.
Is interior light cover installed correctly?
YES
Replace 3 Amp fuse and start up.
YES
NO
Is wire harness connection to display panel tight?
NO
Correct connection and start up.
Correct, replace 3 Amp fuse,and start up.
Does replacement fuse blow?
NO
Start up.
YES
YES
Is there 12 VDC between [1] and [2] of wire harness [3]? (See Art01076)
NO
Replace power board and start up.
Remove wires from interior light, replace 3 Amp fuse, and start up.
YES
Replace display panel and start up.
Replace control board and start up.
NO
Does replacement fuse blow?
YES
Replace light bracket, 3 Amp fuse, and start up.

Art01055

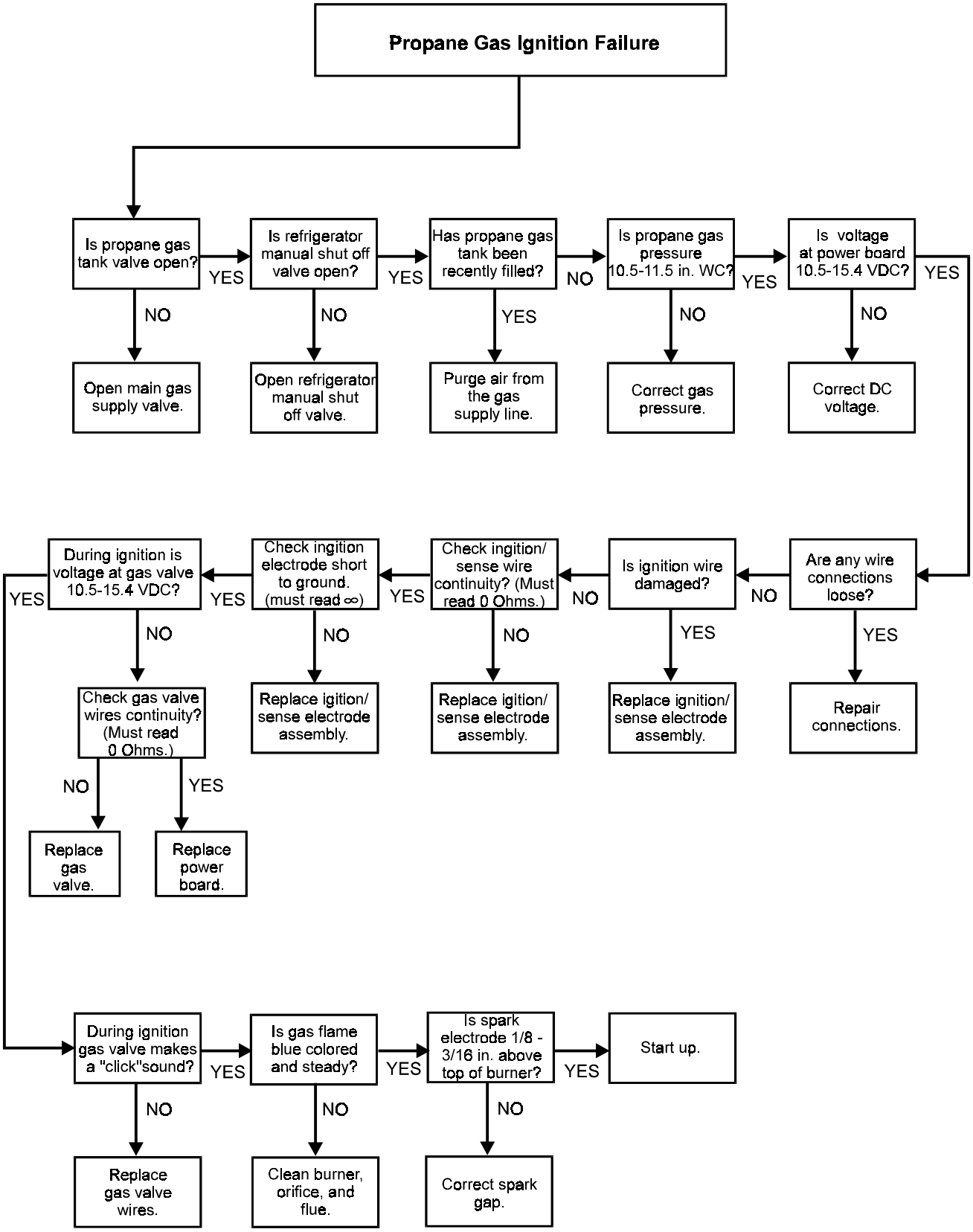
Propane Gas Ignition Failure
Is propane gas tank valve open?
YES
Is refrigerator manual shut off valve open?
YES
Has propane gas tank been recently filled?
NO
Is propane gas pressure 10.5-11.5 in. WC?
YES
Is voltage at power board 10.5-15.4 VDC?
YES
NO
Open main gas supply valve.
NO
Open refrigerator manual shut off valve.
YES
Purge air from the gas supply line.
NO
Correct gas pressure.
NO
Correct DC voltage.
Are any wire connections loose?
NO
Is ignition wire damaged?
NO
Check ingition/ sense wire continuity? (Must read 0 Ohms.)
YES
Check ingition electrode short to ground. (must read ∞)
YES
During ignition is voltage at gas valve 10.5-15.4 VDC?
YES
YES
Repair connections.
YES
Replace ignition/ sense electrode assembly.
NO
Replace igition/ sense electrode assembly.
NO
Replace igition/ sense electrode assembly.
NO
Check gas valve wires continuity? (Must read 0 Ohms.)
NO
Replace gas valve.
YES
Replace power board.
During ignition gas valve makes a "click"sound?
YES
Is gas flame blue colored and steady?
YES
Is spark electrode 1/8 - 3/16 in. above top of burner?
YES
Start up.
NO
Replace gas valve wires.
NO
Clean burner, orifice, and flue.
NO
Correct spark gap.

Art01056

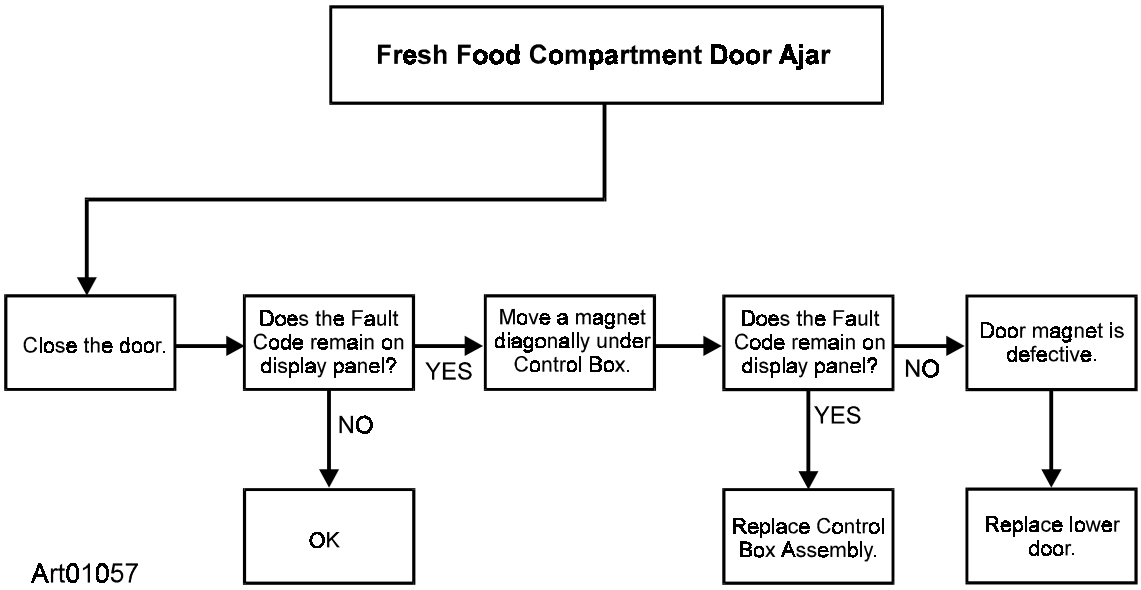
Fresh Food Compartment Door Ajar
Close the door.
Does the Fault Code remain on display panel?
YES
Move a magnet diagonally under Control Box.
Does the Fault Code remain on display panel?
NO
Door magnet is defective.
NO
YES
OK
Replace Control Box Assembly.
Replace lower door.
Art01057

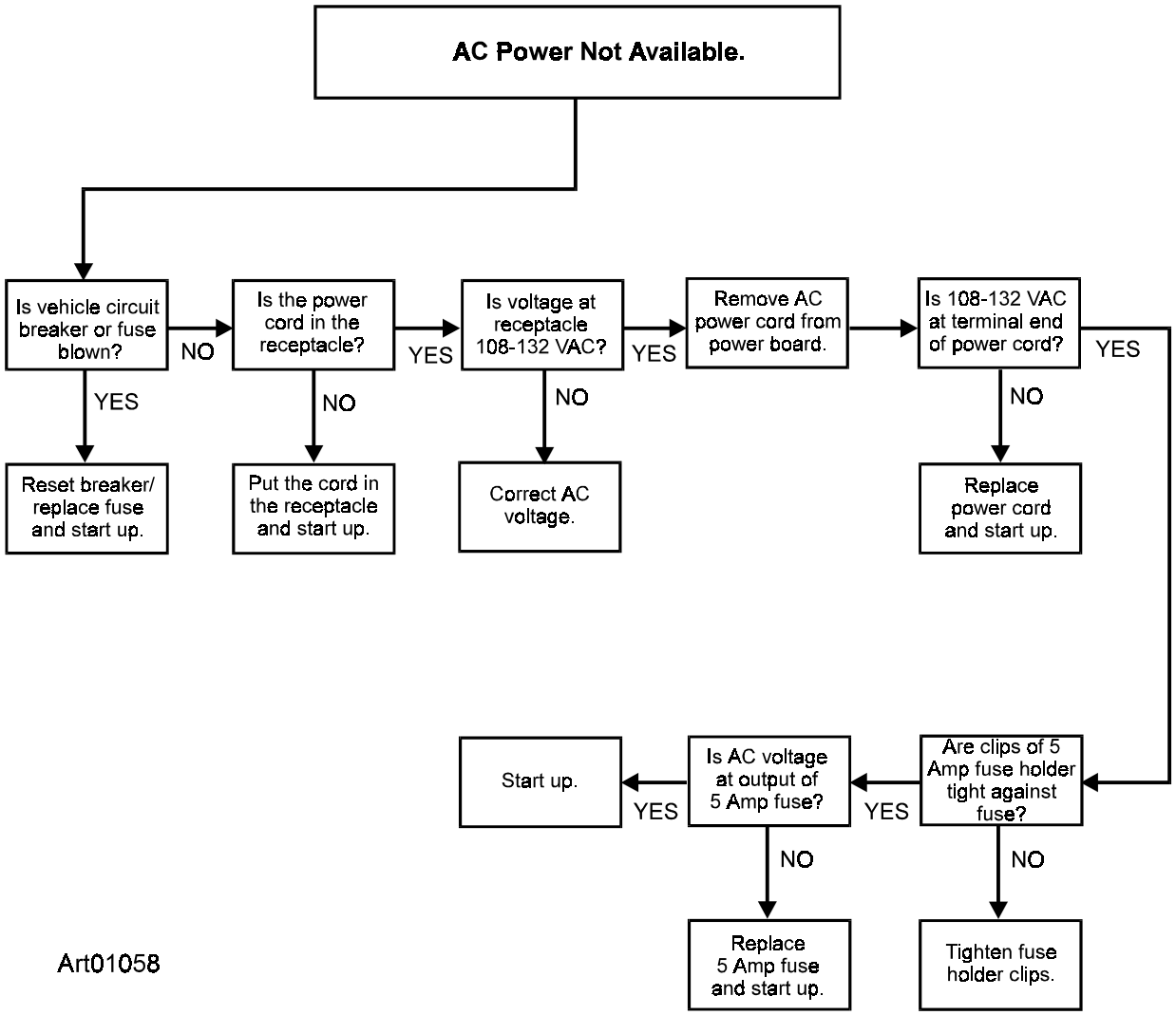
AC Power Not Available.
Is vehicle circuit breaker or fuse blown?
NO
Is the power cord in the receptacle?
YES
Is voltage at receptacle 108-132 VAC?
YES
Remove AC power cord from power board.
Is 108-132 VAC at terminal end of power cord?
YES
YES
NO
NO
NO
Reset breaker/ replace fuse and start up.
Put the cord in the receptacle and start up.
Correct AC voltage.
Replace power cord and start up.
Start up.
YES
Is AC voltage at output of 5 Amp fuse?
YES
Are clips of 5 Amp fuse holder tight against fuse?
NO
NO
Replace 5 Amp fuse and start up.
Tighten fuse holder clips.
Art01058

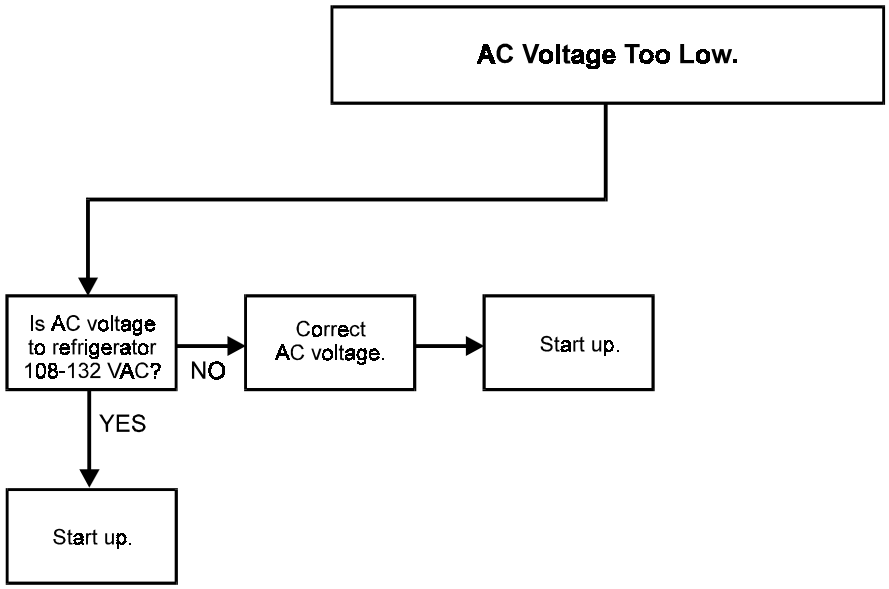

Art01059

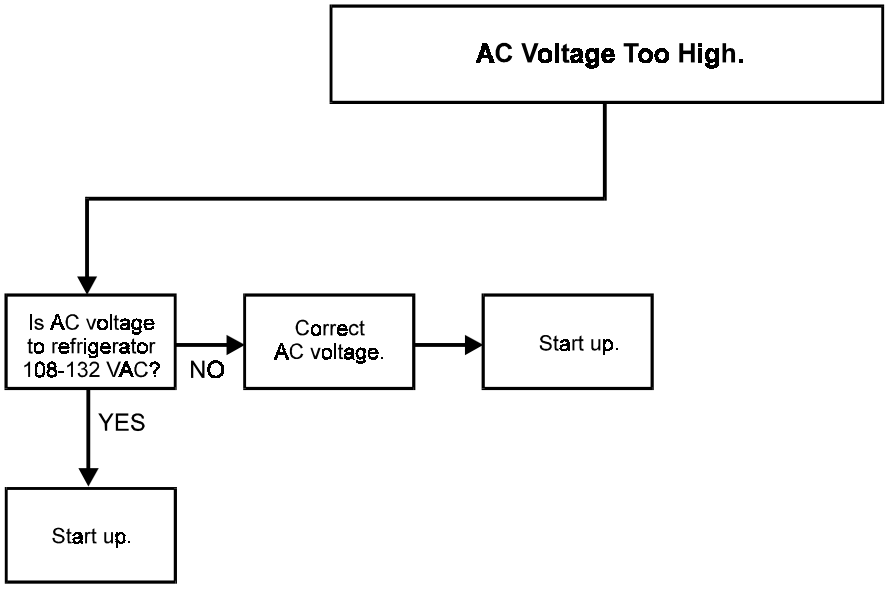

Art01060

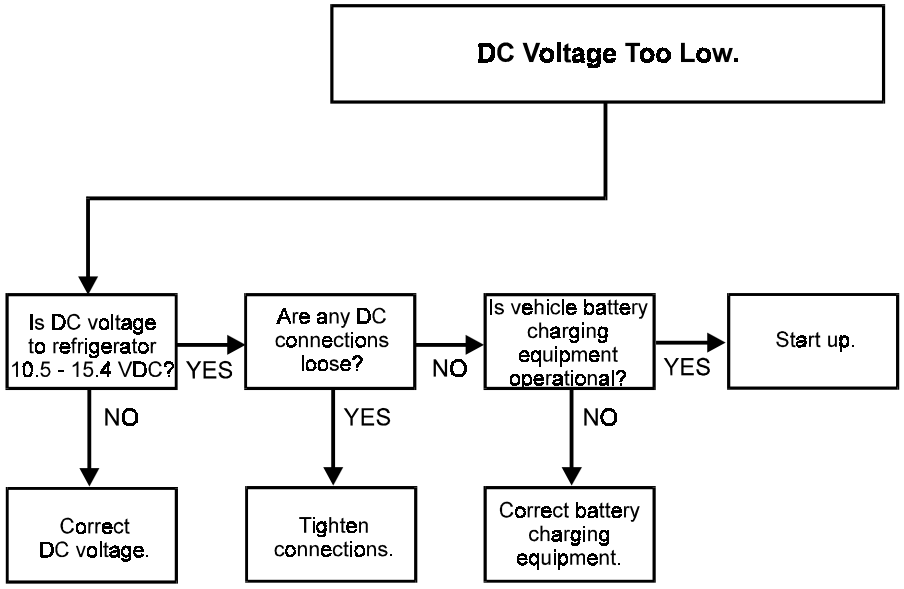

Art01061

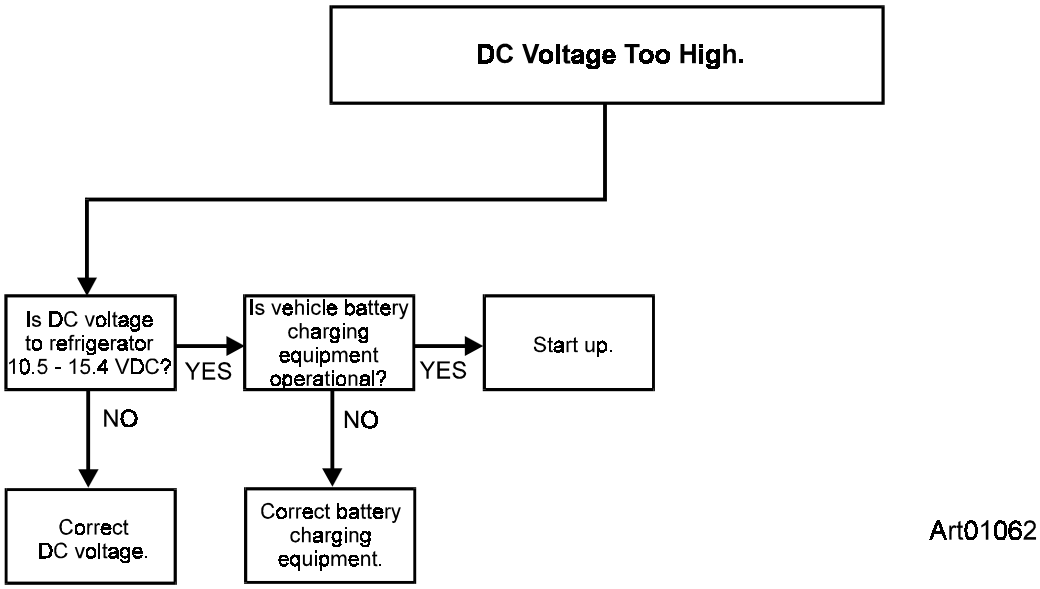

Art01062

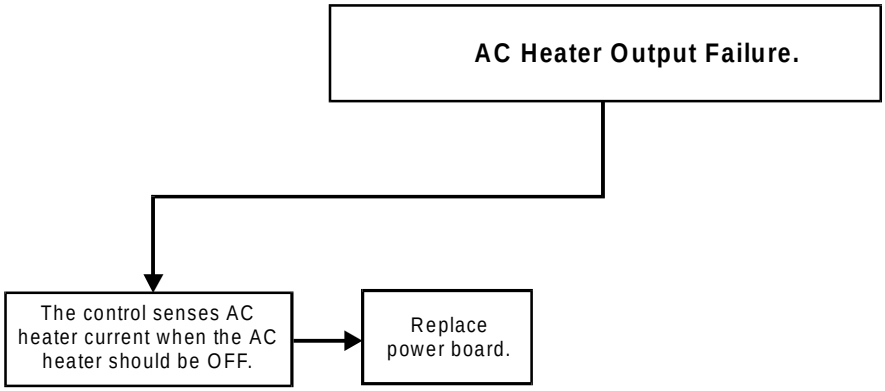

Art01063

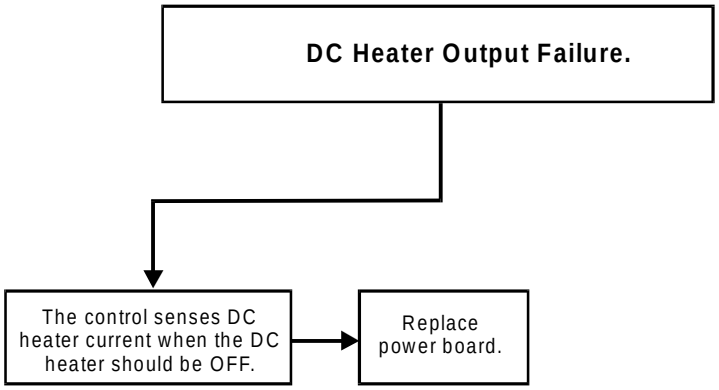

Art01064

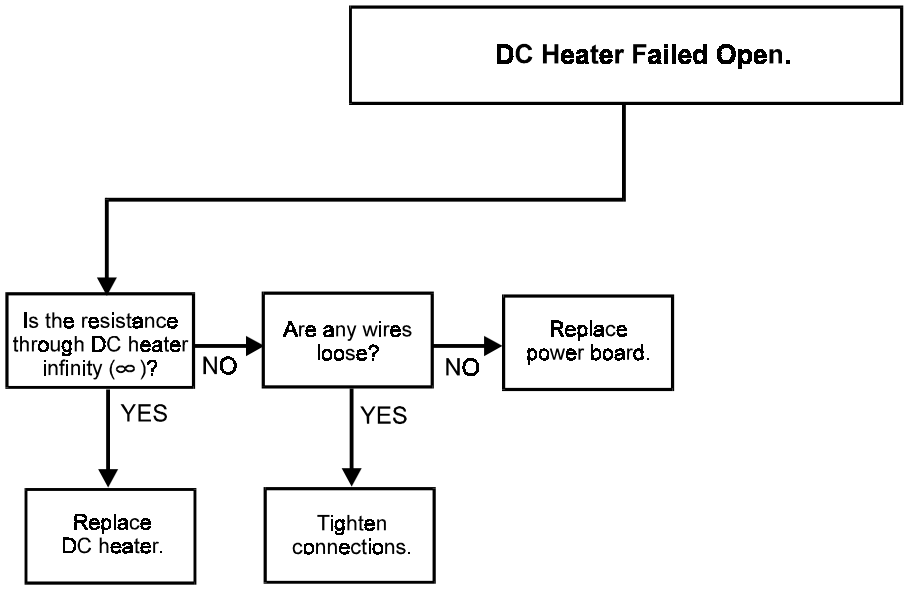

Art01065

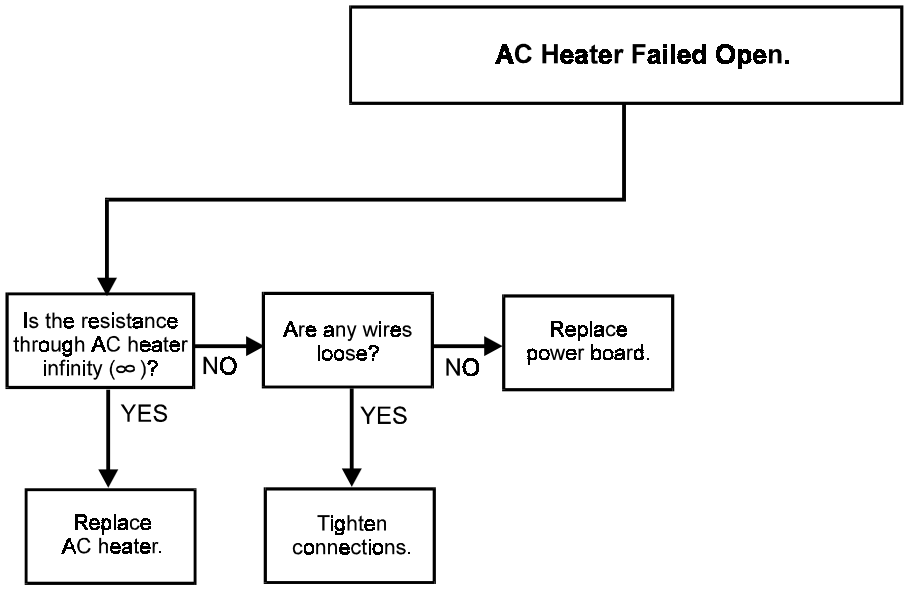

Art01066

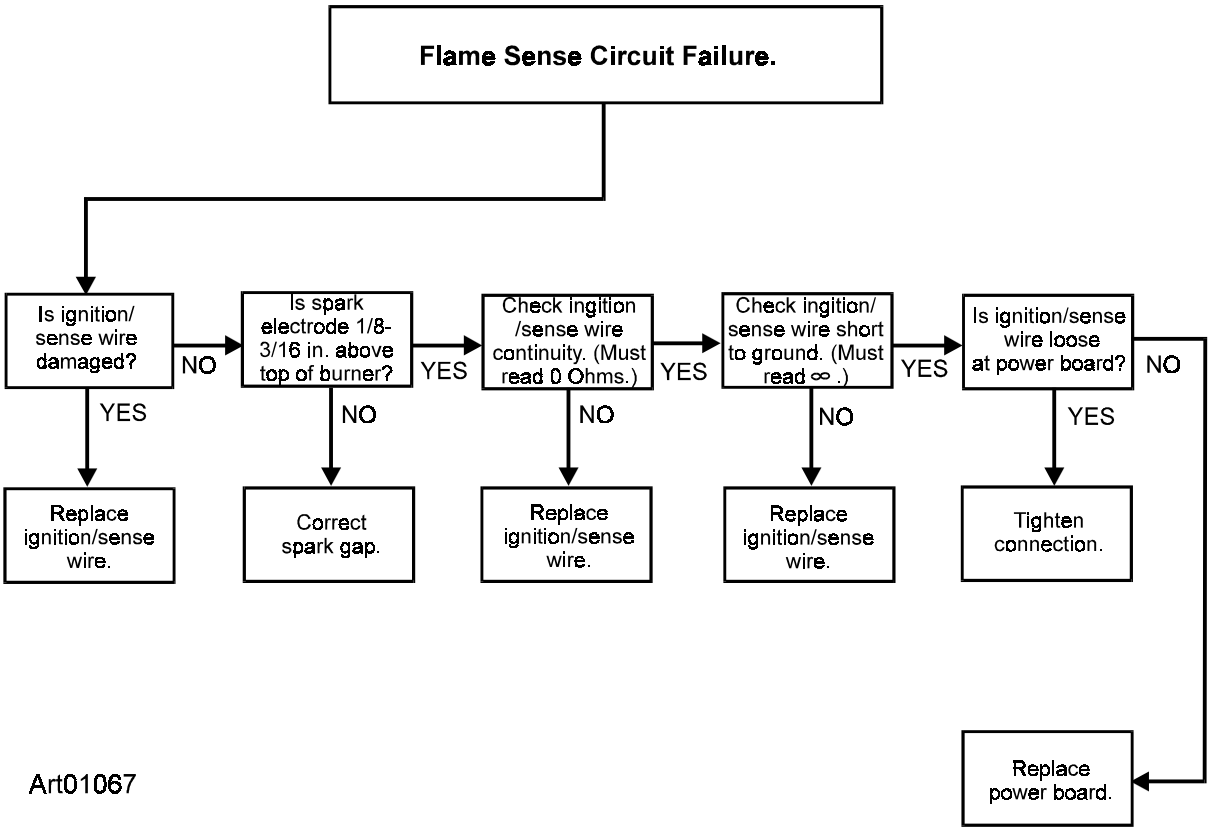
Flame Sense Circuit Failure.
Is ignition/ sense wire damaged?
NO
Is spark electrode 1/8-3/16 in. above top of burner?
YES
Check ingition /sense wire continuity. (Must read 0 Ohms.)
YES
Check ingition/ sense wire short to ground. (Must read ∞ .)
YES
Is ignition/sense wire loose at power board?
NO
YES
NO
NO
NO
YES
Replace ignition/sense wire.
Correct spark gap.
Replace ignition/sense wire.
Replace ignition/sense wire.
Tighten connection.
Replace power board.
Art01067

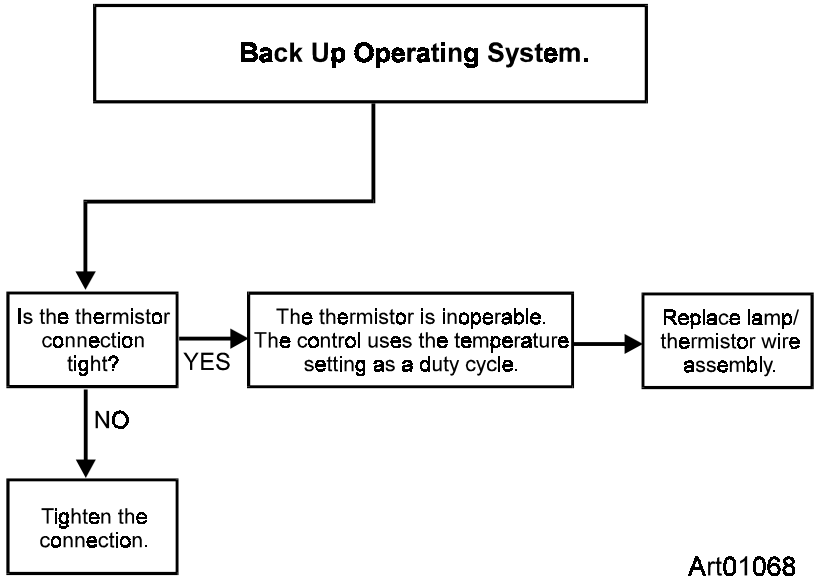
Back Up Operating System.
Is the thermistor connection tight?
YES
The thermistor is inoperable. The control uses the temperature setting as a duty cycle.
Replace lamp/ thermistor wire assembly.
NO
Tighten the connection.
Art01068

Control Diagnostic Function (models N620, N621, N820, and N821)

The Control Diagnostic Function allows the repair technician to put the refrigerator control into a diagnostic display mode. This mode provides the repair technician with specific diagnostic information which can be helpful when trouble-shooting refrigerator control problems.

The diagnostic display mode consists of eight different display screens. While each of these screens show different information, they all use the individual segments of the 7-segment display. The individual segments are:

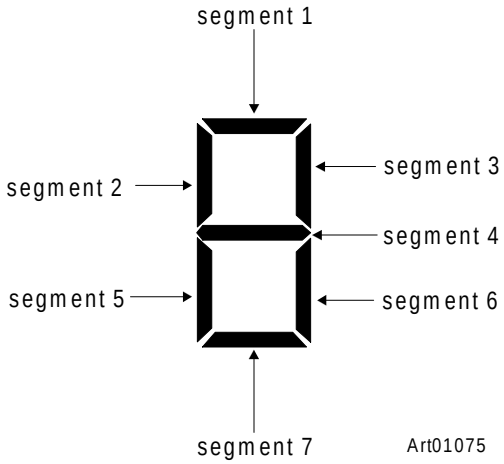

To put the refrigerator control into the diagnostic display mode, push the TEMP SET and MODE buttons at the same time and hold them for five seconds. “1”, which means diagnostic screen #1, will appear for two seconds. The contents of diagnostic screen #1 will then appear until you push the MODE button again.

Each time you push the MODE button, the next diagnostic screen # appears for two seconds and then the contents of the diagnostic screen appears. After screen # 9, the diagnostic screens start again with screen #1.

Diagnostic Screen #1:

All display segments appear.

Diagnostic Screen #2:

No display segments appear.

Diagnostic Screen #3: Thermistor Temperature

The thermistor temperature appears in ° F.

- The first digit of the temperature appears for one second and the second digit of the temperature appears for one second.
- Then no segments appear for a two second pause.
- This cycle repeats until you push the MODE button.

Diagnostic Screen #4: Fault History

Individual segments appear for these recorded faults:

Segment 1 ..... Ignition fault.
Segment 2 ..... Door ajar.
Segment 3 ..... DC voltage low.
Segment 4 ..... DC voltage high.
Segment 5 ..... AC mode selected but not available.
Segment 6 ..... AC relay stuck closed.
Segment 7 ..... AC heater failed open.

Diagnostic Screen #5: Fault History - Continued

Individual segments appear for these recorded faults:

Segment 1 ..... Thermistor failure.
Segment 2 ..... Flame sense failure.

Diagnostic Screen #6: Erase Fault History

“E” appears for one second. Then “r” appears for one second. After a two second pause, the cycle continues to repeat as long as this display screen is active.

To erase the fault history:

- Push “TEMP SET” for five seconds.
  - “C” appears for one second.
  - Then “L” appears for one second.
  - After a two second pause, the cycle continues to repeat as long as this state is active.
- Push “TEMP SET” again for five seconds.
  - “E” appears for one second.
  - Then “r” appears for one second.
  - After a two second pause, the cycle continues to repeat as long as this display screen is active.

Diagnostic Screen #7: Inputs

Individual segments appear for these inputs to the refrigerator controls:

Segment 1 ..... Door of the fresh food compartment is closed and interior light is off.
Segment 2 ..... Burner flame is sensed.
Segment 3 ..... Thermistor is sensed.

Diagnostic Screen #8: Outputs

Individual segments appear for these outputs from the refrigerator controls:

Segment 1 ..... The power board is supplying power to the AC heater.
Segment 2 ..... The power board is supplying power to the DC heater.
Segment 3 ..... The power board is supplying power to the divider heater.
Segment 4 ..... The power board is supplying power to the gas valve.
Segment 5 ..... The power board is supplying power to the interior light.
Segment 6 ..... The power board is supplying power to the spark electrode.

Diagnostic Screen #9: DC Voltage Status

The screen number appears in the left display. The individual segments of the right display appear for the status of the DC voltage:

Segment 1 ..... DC voltage high.
Segment 4 ..... DC voltage normal.
Segment 7 ..... DC voltage low.

Control Diagnostic Function (models N640, N641, N640-IM, N641-IM, N840, N841, N840-IM, and N841-IM)

The Control Diagnostic Function allows the repair technician to put the refrigerator control into a diagnostic display mode. This mode provides the repair technician with specific diagnostic information which can be helpful when trouble-shooting refrigerator control problems.

The diagnostic display mode consists of ten different display screens. While each of these screens show different information, they all use the individual segments of the 7-segment displays. The individual segments are:

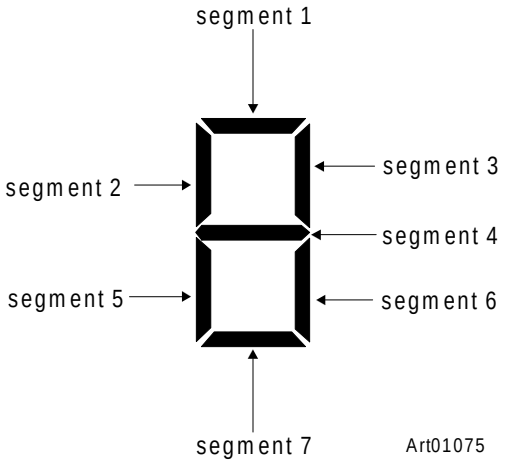

To put the refrigerator control into the diagnostic display mode, push the TEMP SET and MODE buttons at the same time and hold them for five seconds. “1”, which means diagnostic screen #1, will appear for two seconds on the left display. The contents of diagnostic screen #1 will then appear until you push the MODE button again.

Each time you push the MODE button, the next diagnostic screen # appears for two seconds and then the contents of the diagnostic screen appears. After screen # 0 (ten), the diagnostic screens start again with screen #1.

Diagnostic Screen #1:

All display segments appear on both displays.

Diagnostic Screen #2:

No display segments appear on either display.

Diagnostic Screen #3: Thermistor Temperature

The thermistor temperature appears in °F using both displays.

Diagnostic Screen #4: Fault History

The screen number appears in the left display. The individual segments of the right display appear for these recorded faults:

Segment 1 ..... Ignition fault.
Segment 2 ..... Door ajar.
Segment 3 ..... DC voltage low.
Segment 4 ..... DC voltage high.
Segment 5 ..... AC mode selected but not available.
Segment 6 ..... AC relay stuck closed.
Segment 7 ..... AC heater failed open.

Diagnostic Screen #5: Fault History - Continued

The screen number appears in the left display. The individual segments of the right display appear for these recorded faults:

Segment 1 ..... Thermistor failure.
Segment 2 ..... Flame sense failure.
Segment 3 ..... DC relay stuck closed.
Segment 4 ..... DC heater failed open.
Segment 5 ..... AC voltage low.
Segment 6 ..... AC heater failed open.

Diagnostic Screen #6: Erase Fault History

“E” “r” appears for one second and then pauses for two seconds. The cycle continues to repeat as long as this display screen is active.

To erase the fault history:

- Push “TEMP SET” for five seconds.
    - “C” “L” appears for one second and then pauses for two seconds.
    - The cycle continues to repeat as long as this state is active.

- Push “TEMP SET” again for five seconds.

    - “E” “r” appears for one second and then pauses for two seconds.

    - The cycle continues to repeat as long as this display screen is active.

Diagnostic Screen #7: Inputs

The screen number appears in the left display. The individual segments appear in the right display for these inputs to the refrigerator controls:

Segment 1 ..... Door of the fresh food compartment is closed and interior light is off.
Segment 2 ..... Burner flame is sensed.
Segment 3 ..... Thermistor is sensed.

Diagnostic Screen #8: Outputs

The screen number appears in the left display. The individual segments appear in the right display for these outputs from the refrigerator controls:

Segment 1 ..... The power board is supplying power to the AC heater.
Segment 2 ..... The power board is supplying power to the DC heater.
Segment 3 ..... The power board is supplying power to the divider heater.
Segment 4 ..... The power board is supplying power to the gas valve.
Segment 5 ..... The power board is supplying power to the interior light.
Segment 6 ..... The power board is supplying power to the spark electrode.

Diagnostic Screen #9: DC Voltage Status

The screen number appears in the left display. The individual segments of the right display appear for the status of the DC voltage:

Segment 1 ..... DC voltage high.
Segment 4 ..... DC voltage normal.
Segment 7 ..... DC voltage low.

Diagnostic Screen #0: AC Voltage Status

The screen number appears in the left display. The individual segments of the right display appear for the status of the AC voltage:

Segment 1 ..... AC voltage high.
Segment 4 ..... AC voltage normal.
Segment 7 ..... AC voltage low.
No Segments ..... No AC voltage.

Ice Maker (models N620-IM, N621-IM, N820-IM, and N821-IM)

The ice maker is assembled to the refrigerators at the factory as optional equipment. If the refrigerator does not have a factory installed ice maker, one can not be added to the refrigerator at a later time.

The ice maker is fully automatic and will operate in ambient temperatures as low as 0° F. To allow operation at temperatures between 0° F. and 32° F., the ice maker has a heater on the solenoid water valve and on the water line between the solenoid water valve and the ice maker.

CAUTION: The water line heater does not protect the water supply line from the vehicle shut off valve to the solenoid water valve on the back of the refrigerator.

The ice maker heater operates on 12 VDC when the refrigerator controls are ON, unless the DC voltage is less than 10.5 VDC. A thermostat (in series with the heater) supplies voltage to the heater when the ambient temperature is less than 38° F +/- 4° . The thermostat does not supply voltage to the heater when the ambient temperature is more than 48° F. +/- 5° .

When the freezer temperature of the refrigerator is low enough, the ice maker opens the solenoid water valve and fills the mold. The ice maker ejects the frozen ice into a storage bin. As the storage bin fills, the ice raises the ice maker arm until it turns off the ice maker. As you use the ice and lower the ice level in the storage bin, the ice maker arm also lowers. This turns the ice maker on and begins the process of making ice.

Ice Maker Specifications

120 volts AC (108 VAC min. - 132 VAC max.)
Amp raw (cycle on, mold heater off) - .03 amps
Amp draw (cycle on, mold heater on) - 1.6 amps
Amp draw (cycle off) - 0 amps

12 volts DC (10.5 VDC min. - 15.4 VDC max.)
Amp draw (water line heater) - 1.67 amps (20 W @ 12 VDC)
Amp draw (relay) - .083 amps (12 VDC)

Inlet water pressure - 15 min. to 125 max. PSI
Duration of one cycle - 3.5 to 7 minutes
Ice yield - 3 pounds per 24 hours.

Common Problems and Solutions:

If the refrigerator is cooling, but there is no ice in the ice bin [4] (See Art01015):

- Make sure the AC power is connected.
- Make sure the wiring connections are tight.
    - Repair or tighten the connections.
- Make sure that the ice maker arm is in the ON position [2].
- Make sure the water supply is available to the ice maker.
    - Restore the water supply if necessary.
- Check the solenoid water valve [2] and inlet filter [4] for restrictions or failure (See Art 01014).
    - Repair or replace if necessary.
- Make sure that excess frost in the freezer is not preventing the ice maker arm from moving freely.
    - Defrost the refrigerator if necessary.
    - Make sure the door is sealing correctly.

If the ice yield is low:

- Make sure that the refrigerator is vented correctly.
- Make sure that 10.5 VDC min. - 15.4 VDC max. control voltage is available to the refrigerator.
- Make sure that 108 VAC min. - 132 VAC max. voltage is available to the refrigerator and to the ice maker.
- Make sure that there are no restrictions in the water supply line [5].
- Make sure that the water pressure to the ice maker is 15 PSI min. - 125 PSI max.
- Make sure that the temperature setting of the refrigerator is at mid-range or lower.

If an excessive amount of water drips on the ice cubes from the ice maker mold:

- Make sure the water pressure is not higher than 125 PSI max.
- Check the solenoid water valve and inlet filter for restrictions or failure.
    - Repair or replace if necessary.

If the ice maker mold overfills with water:

- Replace the solenoid water valve.

If the ice cubes are milky colored or have a taste:

- Make sure that food was not stored in the ice bin.
- Recommend that the consumer have the water supply inspected for hardness.

Trouble Shooting:

Before using the following Trouble Shooting Chart:

- Make sure that 10.5 VDC min. - 15.4 VDC max. control voltage is available to the refrigerator.
- Make sure that 108 VAC min. - 132 VAC max. voltage is available to the refrigerator and to the ice maker.
- Make sure that the water pressure to the ice maker is 15 PSI min. - 125 PSI max.
- Make sure that the refrigerator is at the mid-range or higher.
- Make sure that the refrigerator is performing correctly and the freezer is below 32° F.
- Make sure that the ice maker arm is down in the ON position.

- Remove the cover plate from the front of the ice maker to get access to the test terminals (See Art01095 and Art001096).

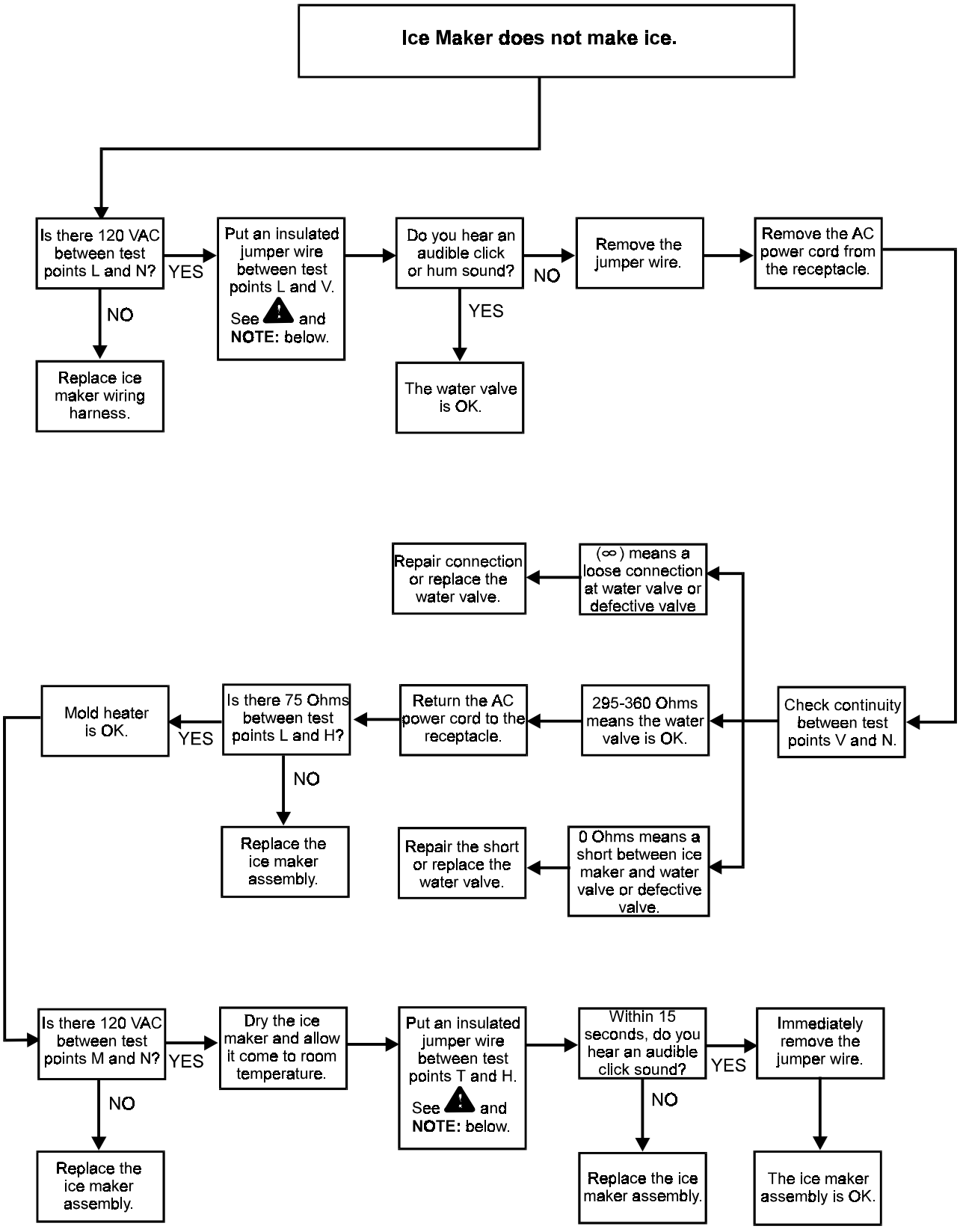

CAUTION: To prevent an electrical shock, make sure to use only an insulated jumper wire.

NOTE: If water is available to the water valve, this test can cause the ice maker mold to overflow.

Art01094

Refrigerator Maintenance

Gas flame appearance:

While in propane gas operation, examine the gas flame:

- Open the lower intake vent.
- Turn the thermostat to “9”.

CAUTION: The burner box cover can be hot. Wear gloves to avoid burns.

- Open the burner box door [3] and look at the gas flame [1] (See Art00982 and Art00955).
  - The flame should be a darker blue inside and a lighter blue outside and should be a constant and steady shape.
  - The flame should not be yellow and should not have an erratic and unstable shape.
  - Make sure the flame does not touch the inside of the flue tube [2].
- Close the burner box door.

Remove and clean the burner orifice:

To remove and clean the burner orifice:

- Close the valve at the propane gas tank(s).
- Close the manual shut of valve of the refrigerator.
- Push the ON/OFF button to stop the refrigerator.

CAUTION: The burner box cover can be hot. Wear gloves to avoid burns.

- Open the lower intake vent.
- Remove the flare nut from the orifice assembly [1] (See Art00994).
- Remove the orifice assembly from the burner [2].

WARNING: When cleaning, do not try to remove the orifice [3] from the orifice adapter [4]. Removal will damage the orifice and seal of the orifice and can cause a propane gas leak. Leaking propane gas can ignite or explode and result in dangerous personal injury or death. Do not clean the orifice with a pin or other objects.

- Clean the orifice assembly with air pressure and alcohol only.
- Using a wrench, assemble the orifice assembly to the burner.
- Assemble the flare nut to the orifice assembly.
- Examine all of the gas connections for leaks.

Diagnosing Cooling Problems

WARNING: The refrigerator cooling system is under pressure. Do not try to repair or to recharge a defective cooling system. The cooling system contains sodium chromate. The breathing of certain chromium compounds can cause cancer. The cooling system contents can cause severe skin and eye burns, and can ignite and burn with an intense flame. Do not bend, drop, weld, move, drill, puncture, or hit the cooling system.

Make sure the cooling unit has the correct ventilation:

- Make sure that the intake and exhaust vents are not blocked.
- Make sure that the air flow through the back of the refrigerator is not decreased or blocked.
- Make sure the ventilation baffle is correctly installed.

Examine the cooling unit for leaks.

WARNING: If you think that the cooling unit has a leak, do not operate the refrigerator. Replace the cooling unit before operating the refrigerator.

- If you smell ammonia, the cooling unit has a leak and must be replaced.
- If you see a yellow powder or residue anywhere at the rear of the refrigerator or in the enclosure, the cooling unit has a leak and must be replaced.

Determine if the cooling problem occurs while operating the refrigerator on propane gas, AC electric, and DC electric:

- Determine if the selected energy source is operating and heating correctly:

  CAUTION: Touch only the outside of the insulation sleeve. During normal operation, some tubes of the cooling unit are hot. Do not touch any tubes of the cooling unit.

  - Within 20 minutes of starting the refrigerator, touch the outside of the insulation sleeve.
  - The outside of the insulation sleeve should be warm to the touch.
  - If the outside of the insulation sleeve is not warm, the selected energy source may not be operating correctly.
  - Start up the refrigerator on a different energy source and repeat the procedure for all energy sources.
- If the outside of the insulation sleeve is warm to the touch, make sure the unit is cooling correctly.
  - Within one hour after starting up the refrigerator, touch the fins on the inside of the fresh food compartment.
  - The fins should feel cold to the touch.
  - If the fins do not feel cold to the touch after two hours, the cooling unit is not operating correctly.

- If the cooling problem does not occur when operating on all energy sources, the problem is not the cooling unit.

    - Use the “Troubleshooting” section of this manual to determine the cause of the problem.

Fuse Replacement

The electrical circuits of this refrigerator have fuses to protect them from an overload. If the fault codes show that a fuse is unserviceable, replace it as follows.

WARNING: Do not operate the refrigerator without the power board cover on the refrigerator. To prevent a circuit overload and a possible electrical fire, use only these fuses:

DC control circuit - 3 amp (purple) blade type automotive fuse
DC heater circuit - 30 amp (green) blade type automotive fuse
AC circuit - 5 amp glass cartridge fuse

1. Push the ON/OFF button to shut down the refrigerator.

2. Remove the AC power cord from the receptacle.

3. Remove the AC power cord from the power board that is at the rear of the refrigerator.

4. Remove the DC power supply wires from the power board.

5. Remove the ignition sense wire from the power board.

6. Remove the gas valve wires from the power board.

7. Remove the mounting screws and the power board cover.

8. Replace the unserviceable fuse(s) with the new fuse(s) of the correct type and size.

9. Reverse this procedure and assemble the power board cover and all wiring.

NOTE: Do not use longer screws. Longer screws can damage the wiring harness.

Remove the Refrigerator

CAUTION: The rear of the refrigerator has sharp edges and corners. To prevent cuts or abrasions when working on the refrigerator, be careful and wear cut resistant gloves.

1. Close the valve at the propane gas tank(s).

WARNING: To avoid possible propane gas leaks, always use two wrenches to loosen and tighten the gas supply line connections.

2. Open the lower intake vent and remove the gas supply line from the bulkhead fitting of the refrigerator.

3. Remove the AC power cord from the receptacle.

4. Remove the DC wiring from the refrigerator:

    - Put a mark on the DC wires so you can put them back in the correct location.

    - Remove the DC fuse or remove the DC wiring from the battery or the converter.

    - Remove the DC wires from the refrigerator.

5. Remove the plastic plugs from the mounting flanges of the refrigerator.

6. Remove the screws which fasten the refrigerator to the wall.

7. Remove the refrigerator from the opening.

Reinstall the Refrigerator

WARNING: Make sure the combustion seal is not broken, is completely around the refrigerator mounting flanges, and is between the mounting flanges and the wall of the enclosure. If the combustion seal is not complete, exhaust fumes can be present in the living area of the vehicle. The breathing of exhaust fumes can cause dizziness, nausea, and in extreme cases, death.

1. Push the refrigerator completely into the enclosure.

2. Put the screws though the mounting flanges and into the wall.

3. Put the plastic plugs into the mounting flanges of the refrigerator.

WARNING: To avoid possible propane gas leaks, always use two wrenches to loosen and tighten the gas supply line connections.

5. Attach the gas supply line to the bulkhead fitting of the refrigerator.

6. Open the valve at the propane gas tank(s).

WARNING: Do not allow the leak checking solution to touch the electrical components. Many liquids are electrically conductive and can cause electrical shorts and in some cases, fire.

7. Examine the gas supply line for leaks.

8. Connect the DC wiring to the refrigerator:

    - Install the DC fuse or connect the DC wiring to the battery or the converter.

    - Connect the DC wires from the refrigerator.

9. Connect the AC power cord to the receptacle.

Wiring Pictorial

The parts in the wiring pictorial are (See Art01111):

1 ..... Display overlay (models N640, N641, N640-IM, N641-IM , N840, N841,N840-IM, and N841-IM)
2 ..... Display overlay (models N620, N621, N820 and N821)
3 ..... Display board (models N640, N641, N640-IM, N641-IM , N840, N841,N840-IM, and N841-IM)
4 ..... Display board (models N620, N621, N820 and N821)
5 ..... Divider heater
6 ..... Thermistor / Light assembly
7 ..... 120 VAC Power cord
8 ..... 5 Amp fuse
9 ..... 3 Amp fuse
10 ..... Spark electrode
11 ..... 12 VDC connection
12 ..... Gas valve
13 ..... AC heater
14 ..... 30 Amp fuse (3-way models only)
15 ..... DC heater (3-way models only)
16 ... 3 Amp fuse (models N640-IM, N840-IM, and N841-IM)
17 ..... Relay (models N640-IM, N840-IM, and N841-IM)
20 ..... Water line heater(models N640-IM, N840-IM, and N841-IM)
21 ... Thermostat (models N640-IM, N840-IM, and N841-IM)

Wiring Diagram

The parts in the wiring diagram are (See Art01110):

1 ..... Power board
2 ..... -12 VDC
3 ..... Gas solenoid valve
4 ..... +12 VDC
5 ..... Thermistor
6 ..... Interior light
7 ..... Divider heater
8 ..... ON / OFF switch
9 ..... Voltage regulator
10 ..... MODE button
11 ..... TEMP SET button
12 ..... Door
13 ..... Micro Processor
14 ..... Alarm (models N640, N641, N640-IM, N641-IM, N840, N841, N840-IM, and N841-IM)
15 ..... LED (models N640, N641, N640-IM, N641-IM, N840, N841, N840-IM, and N841-IM)
16 ..... LED
17 ..... 120 VAC Connection
18 ..... AC heater
19 ..... DC heater (3-way models only)
20 ..... Water line heater (models N640-IM, N840-IM, and N841-IM)
21 ... Thermostat (models N640-IM, N840-IM, and N841-IM)

Ice Maker Wiring Pictorial and Diagram

The parts of the ice maker wiring pictorial and diagram are (See Art01016):

1 ..... 120V AC Hot
2 ..... PC Board
3 ..... Ground screw
4 ..... Hot / smooth
5 ..... Hot / Ribbed
6 ..... Solenoid Water Valve
7 ..... Thermal Fuse
8 ..... Ice maker
9 ..... Mold Heater
10 ..... Thermostat
11 ..... Shut Off Switch
12 ..... Fill Switch

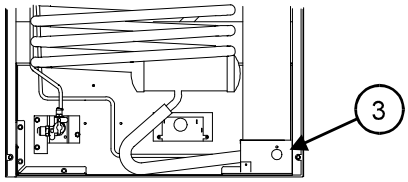

Art00982

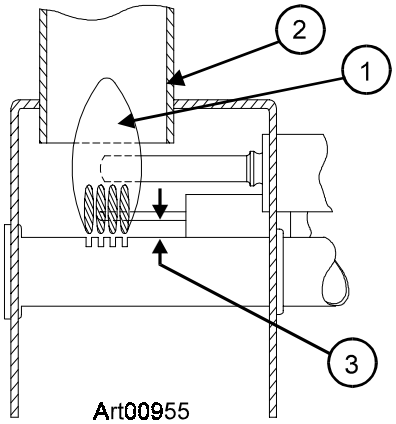

Art00955

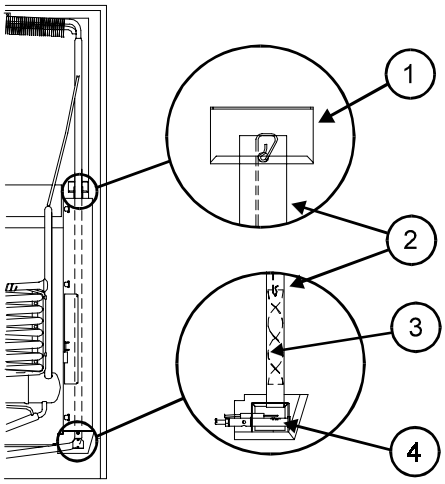

Art00993

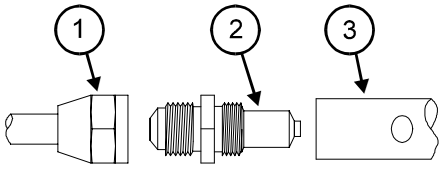

Art00994

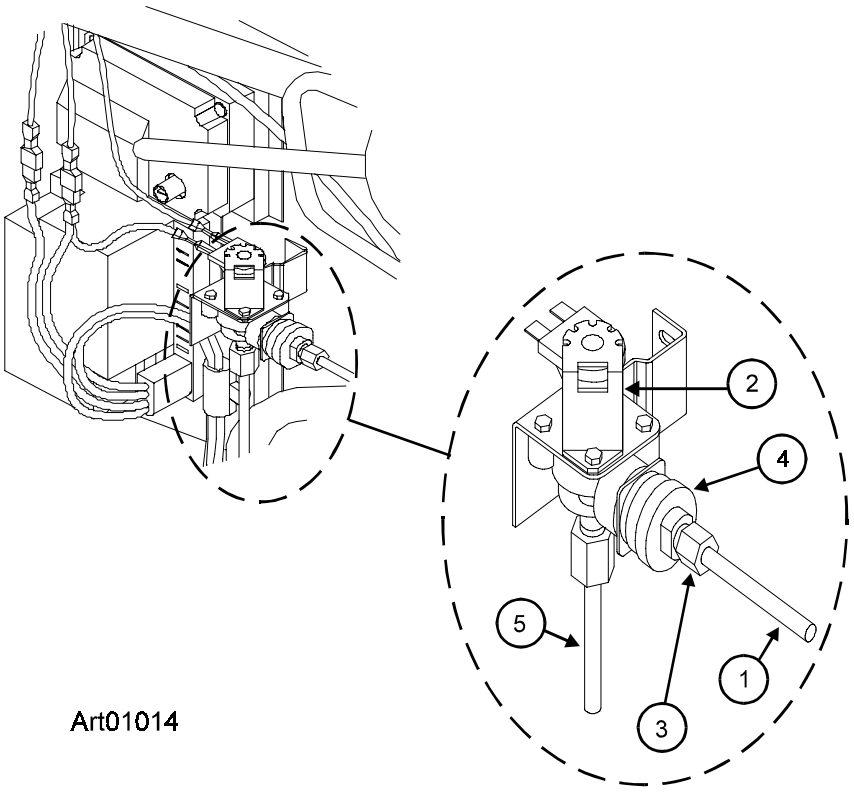

Art01014

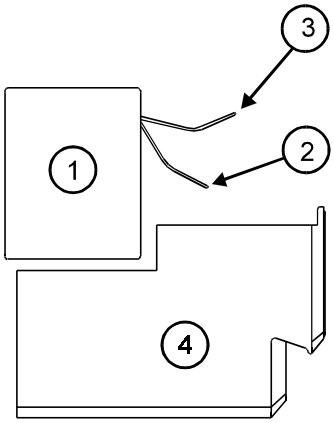

Art01015

Wiring Diagram

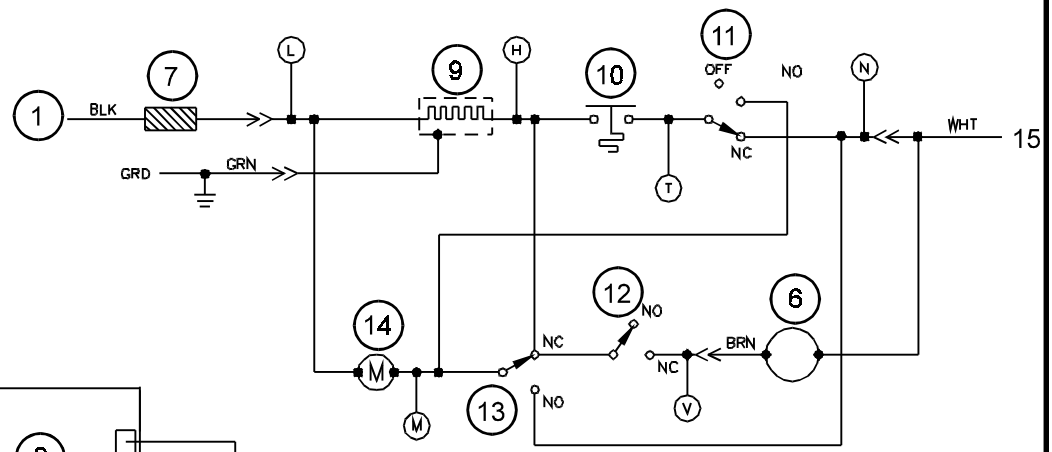

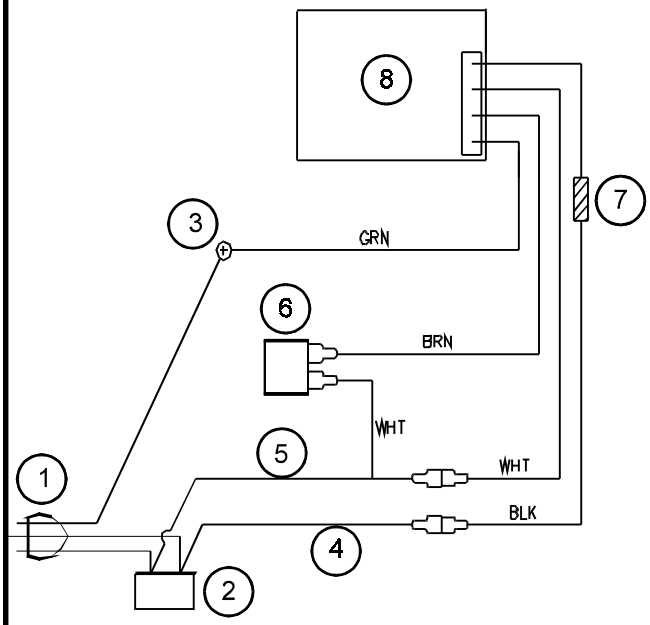

Wiring Pictorial

Art01016

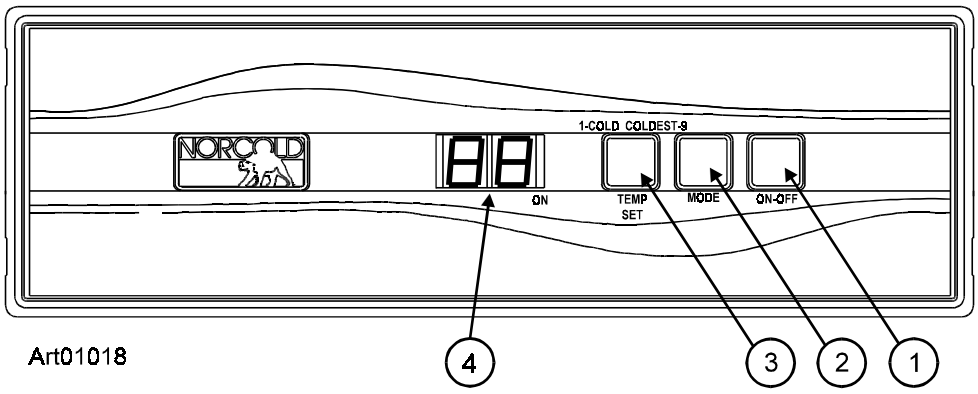

Art01018

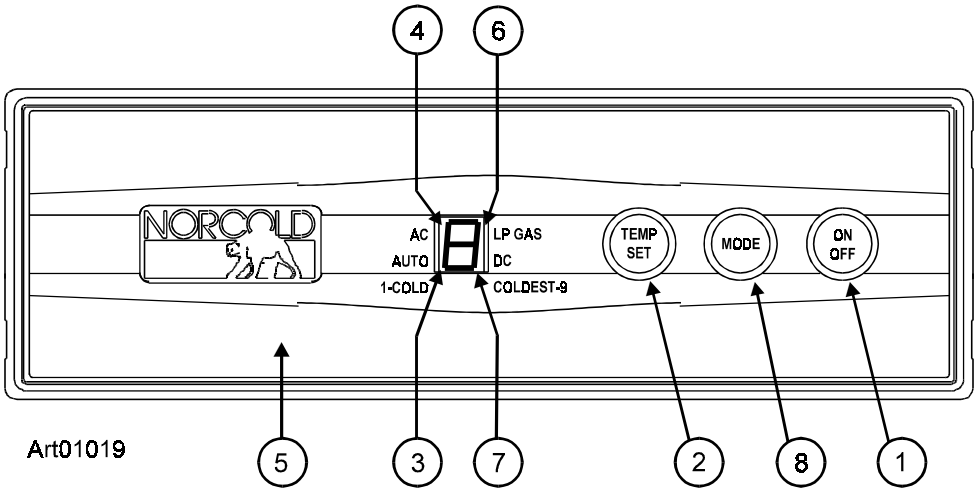

Art01019

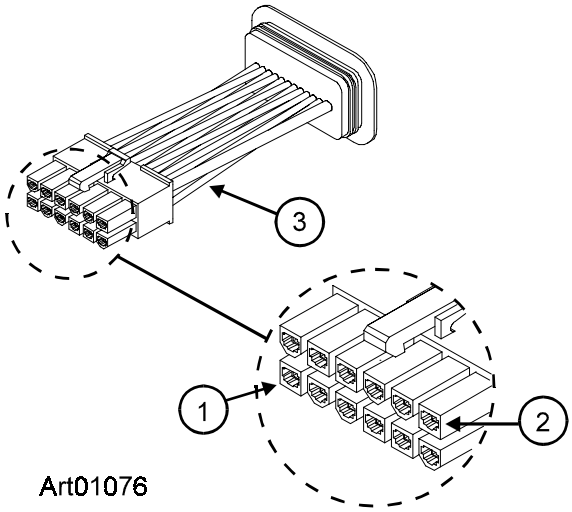

Art01076

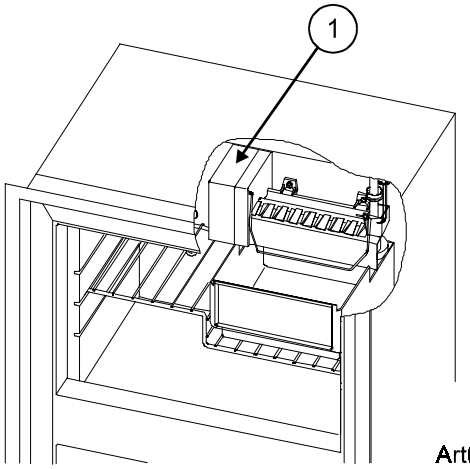

Art01095

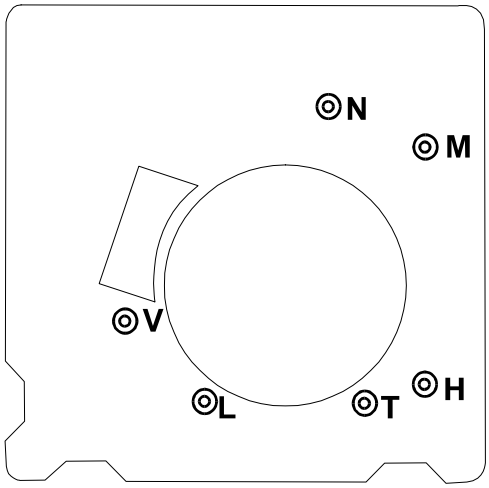

Art01096

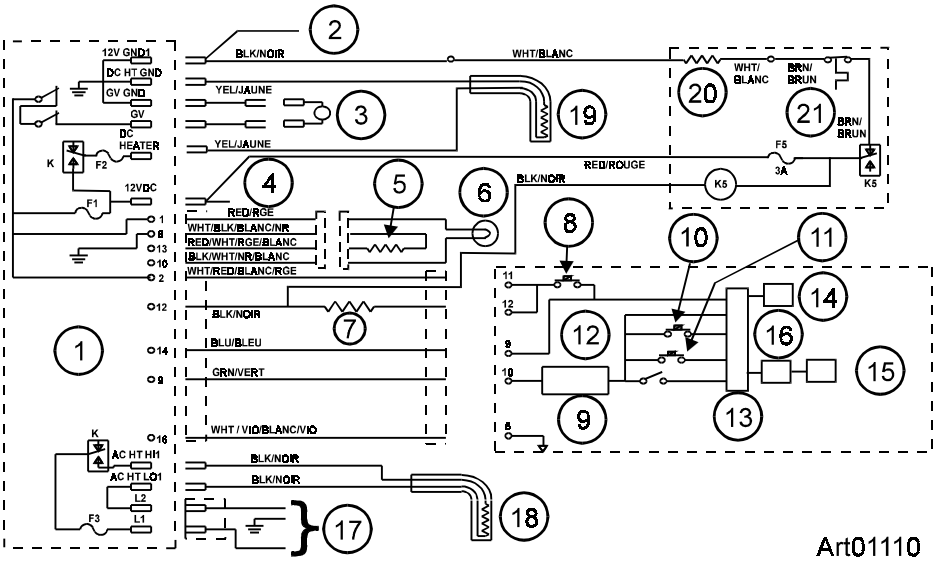

Art01110

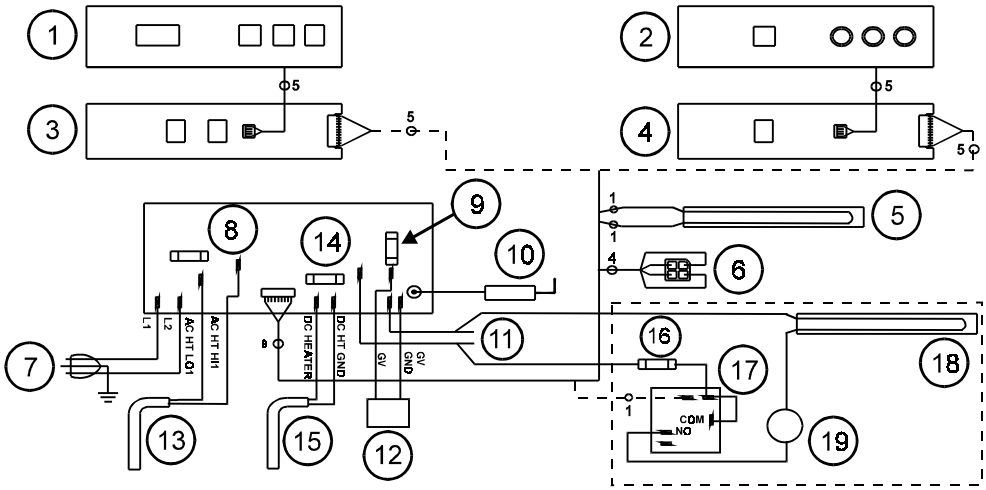

Art01111

This manual has been provided courtesy of My RV Works, Inc.

www.myrvworks.com

You can find more RV service manuals here:

www.myrvworks.com/manuals

Over the years of running a mobile RV repair service, having a dedicated place to access service manuals for all the different appliances and components found on RVs was something that I always had a desire to create.

I hope this resource makes your RV repairs easier, as it has mine, but please be careful and follow proper safety practices when attempting to repair your own RV.

If in doubt, please consult with a professional RV technician!



DARREN KOEPP - OWNER, MY RV WORKS, INC.

All service manuals provided on www.myrvworks.com are believed to be released for distribution and/or in the public domain.