FISHER & PAYKEL

ACTIVESMART™ REFRIGERATOR

ICE & WATER, AUTOMATIC ICE

RF172G model

INSTALLATION GUIDE / USER GUIDE

CONTENTS

Introduction	2
Safety and warnings	3
Installation instructions	6
ActiveSmart™ special features	14
SmartTouch control panel	14
External display	15
ActiveSmart™ operating instructions	16
Humidity control system	16
Temperature control	16
Door alarms	17
Alarm Mute	17
Key Mute	17
Key Lock	17
Sabbath Mode activation	18
Using your water dispenser	18
Water filter	19
Using your ice maker	20
Bottle Chill	22
Fast Freeze	22
Ice Boost	22
Cleaning and care	24
Exterior	24
Interior	25
Foodcare	29
Items stored in your refrigerator	29
Items stored in your freezer	29
Moving or storing your appliance	30
ActiveSmart™ sounds	31
Troubleshooting	32
Manufacturer's service & warranty	37

IMPORTANT!

SAVE THESE INSTRUCTIONS

The models shown in this user guide may not be available in all markets and are subject to change at any time. For current details about model and specification availability in your country, go to our website fisherpaykel.com or contact your local Fisher & Paykel dealer.

Note: the word 'refrigerator', throughout this user guide, refers to the combination of refrigerator/freezer products.

Registration

Register your product with us so we can provide you with the best service possible.

To register your product visit our website: fisherpaykel.com

INTRODUCTION

Thank you for buying a Fisher & Paykel ActiveSmart™ refrigerator.

At Fisher & Paykel, we are very proud of this refrigerator. It offers a combination of size and storage space with the latest features and functions.

Thousands of hours of food care research and refrigeration experience has been programmed into your refrigerator to give you the best possible performance.

We hope you enjoy your new refrigerator.

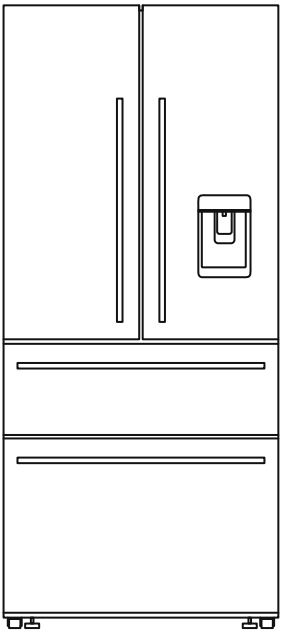

French Door

⚠ WARNING!	
	**Electric Shock Hazard** **Read and follow the safety and warnings outlined in this user guide before operating this appliance.** **Failure to do so can result in death, electric shock, fire or injury to persons.**

⚠ WARNING!	
 **R600a**	**This appliance contains flammable refrigerant isobutane (R600a).**

Use this appliance only for the intended purpose as described in the user guide.

IMPORTANT SAFETY INSTRUCTIONS

WARNING!

When using this appliance always exercise basic safety precautions including the following:

- **Children should be supervised to ensure that they do not play with the appliance.**
- **Cleaning and user maintenance shall not be undertaken by children without supervision.**
- **This appliance can be used by children aged from 8 years and above and persons with reduced physical, sensory or mental capabilities or lack of experience and knowledge if they have been given supervision or instruction concerning use of the appliance in a safe way and understand the hazards involved.**
- **The manufacturer's installation instructions for product and cabinetry ventilation must be followed when installing the appliance.**
- **To avoid hazard due to instability of the appliance, it must be fixed in accordance with installation instructions.**
- **Keep ventilation openings, in the appliance enclosure or the built-in structure, clear of obstruction.**
- **Do not use mechanical devices or other means to accelerate the defrosting process, other than those recommended by the manufacturer.**
- **Do not damage the refrigerant circuit.**
- **In case of damage to the refrigerant circuit, ventilate the area by opening all windows.**
  - **Do not operate electrical equipment or any other equipment that may produce arcs, sparks or flames in the area. Contact your Fisher & Paykel trained and supported service technician immediately to arrange for the appliance to be repaired.**
-

Electrical

- **This appliance must be installed in accordance with the installation instructions before use.**
- **To allow disconnection of the appliance from the supply after installation, incorporate a switch in the fixed wiring in accordance with the local wiring rules.**
- **If the power supply cord is damaged, it must only be replaced by your Fisher & Paykel trained and supported service technician.**
- **WARNING: Do not use electrical appliances inside the food storage compartments of the appliance, unless they are of the type recommended by the manufacturer.**

IMPORTANT!

- **Your appliance is designed to operate for many years without the need for service checks. However, if your appliance is malfunctioning, have it attended to by your Fisher & Paykel trained and supported service technician as soon as possible.**
- **If you suspect that the product is not getting cold — items such as ice cream are melting— remove all perishable food and store in another appliance or cooler to prevent spoilage. Immediately call for a service technician.**

Cleaning

- **Use only soap based cleaning products.**
- **Avoid using anti-bacterial cleaning products on either the interior or exterior of the cabinet as they may cause rusting of metal components and cracking of plastic components.**

Disposal

- **Extreme care must be taken when disposing of your old appliance to avoid hazards:**
  - **The flammable refrigerant gas must be safely removed by a qualified service technician.**
  - **The thermal insulation foam in this appliance may contain flammable insulation blowing gases, any exposed foam may be highly flammable and must be carefully treated during disposal.**
  - **DANGER: Risk of child entrapment. Before you throw away your old refrigerator or freezer the doors and panels should be removed and the shelves left in place so that children may not easily climb inside.**
- **Consult your local energy authority or local codes as to the best way to dispose of your old appliance.**

Storing food and drinks

- **Do not store explosive substances such as aerosol cans with a flammable propellant in this appliance.**
- **Never store volatile or flammable materials in your appliance as they may explode.**
- **Never freeze liquids in glass containers. Liquid expands during freezing, which may cause the container to explode.**
- **Never freeze carbonated drinks. They may explode.**

Water filter

IMPORTANT!

- **The water connection to your Ice & water refrigerator must be installed by an qualified plumber or Fisher & Paykel trained and supported service technician and comply with all state and local laws.**
- **Installation and use MUST comply with all state and local plumbing codes. Check with your local public works department for plumbing codes. You must follow their guidelines as you install the water filtration system.**
- **The water filter cartridge needs to be changed when the replacement indicator icon illuminates. This will happen every 6 months.**
- **If the water filtration system has been allowed to freeze, replace filter cartridge. Failure to replace the disposable filter at recommended intervals may lead to reduced filter performance and failure of the filter, causing property damage from water leakage or flooding.**
- **In cases of excessively reduced filter life, we recommend that you consult a local plumber or your water supplier for advice on suitable filtration requirements for the water supplied to your home.**
- **Filter replacement is the consumer's responsibility and will not be covered by the warranty except in the case of faulty parts or materials within the filter cartridge.**
- **If the water has not created ice for some time or ice has an unpleasant taste or odor, dispose of the ice and refer to 'Automatic ice' for flushing instructions. If unpleasant taste or odor persists, you may wish to fit a new filter cartridge.**
- **Use new tubing supplied with the refrigerator. DO NOT reuse old tubing from old water and ice connections.**
- **Your water filtration system can withstand up to 120psi (827kPa) of water pressure. Ensure the supplied pressure reducing valve is installed before installing the water filtration system. DO NOT install if water pressure exceeds 120psi (827kPa).**
- **To reduce the risk associated with property damage due to water leakage or flooding:**
  - **DO NOT install systems in areas where ambient temperatures may go above 100°F (38°C) or drop below 33°F (0.6°C).**
  - **DO NOT install on hot water supply lines. The maximum operating water temperature of this filter system is 100°F (38°C).**
  - **DO NOT install where water hammer conditions may occur. If water hammer conditions exist, you must install a water hammer arrester.**
- **WARNING: Connect to safe drinking water only.**

- ## WARNING!

To reduce the risk associated with choking:

- **DO NOT allow children under 3 years of age to have access to small parts during the installation of the water filter.**

Ice making

IMPORTANT!

- **Avoid contact with the moving parts of the ice maker ejector mechanism and do not place your fingers on the automatic ice-making mechanism while the appliance is in operation.**
- **Do not use ice cubes that may have become discolored, usually with a green-**blue color. If such discoloration is noted, discard the ice cubes and contact your Fisher & Paykel trained and supported service technician.

INSTALLATION INSTRUCTIONS

Please follow the installation steps below to ensure your appliance operates correctly.

Before installation

Power

- Install your appliance where the plug is easily accessible.
- Connect your refrigerator to a separate power point. Avoid sharing the power point with other appliances. Do not use extension cords and double adaptors as the combined weight of two power cords can pull the double adaptor from the power outlet.
- For power requirements, refer to the information on the serial plate located at the front bottom right-hand side of the refrigerator when the door is open.
- Ensure your appliance is properly grounded (earthed).
- Connect the appliance to the electrical supply (115V 60Hz) with the fitted plug and lead.
- Connections to the mains supply should be in accordance with local regulations.

Location

- Do not place your refrigerator in direct sunlight.

Ice & Water and Automatic Ice models

- Your Ice & Water and Automatic Ice refrigerator must be installed by a qualified plumber or Fisher & Paykel trained and supported service technician as incorrect plumbing can lead to water leaks.
- Fisher & Paykel Appliances does not accept responsibility for damage (including water damage) caused by faulty installation or plumbing.

Product and cabinetry dimensions

RF172G

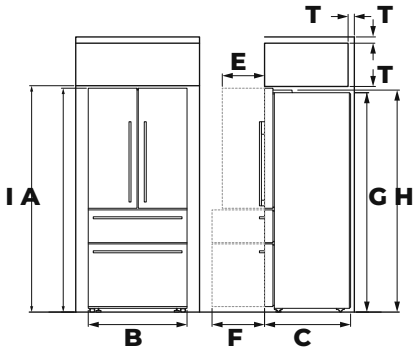

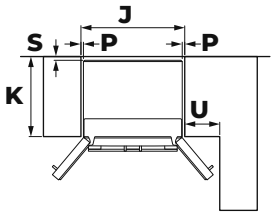

Flush with refrigerator chassis — full door rotation

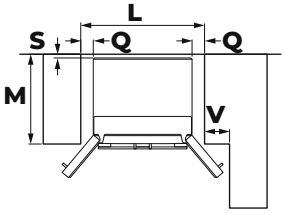

Flush with refrigerator door — full door rotation

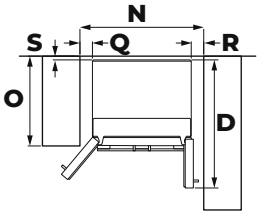

Flush with refrigerator door — 90° door rotation

		RF172G
PRODUCT DIMENSIONS		**inches (mm)**
A	Overall height of product	70 1/2 (1790)
B	Overall width of product	31 1/8 (790)
C	Overall depth of product (excludes handle)	27 1/4 (692)
D	Depth with door open — from rear of fridge — 90° rotation	40 3/8 (1026)
E	Depth with door open — from flush with door — 90° rotation	13 5/16 (338)
F	Depth of open drawer — from flush with door (excludes handle)	16 9/16 (420)
G	Height to top of chassis	69 1/16 (1754)
H	Height to top of hinge cover	69 7/8 (1775)
CABINETRY DIMENSIONS (including minimum air clearances)		
I	Inside height of cavity	71 1/4 (1810)
Flush with refrigerator chassis — full door rotation		
J	Inside width	32 11/16 (830)
k	Inside depth	25 3/16 (640)
Flush with refrigerator door — full door rotation		
l	Inside width	39 (990)
m	Inside depth flush to flat door	28 1/4 (718)
Flush with refrigerator door — 90° door rotation (for full drawer/shelf access, the doors need to be open past 90°)		
n	Inside width	39 (990)
o	Inside depth flush to flat door	28 1/4 (718)
MINIMUM CLEARANCES		
p	Side clearance	13/16 (20)
Q	Side clearance — hinge side flush with door — full rotation	3 15/16 (100)
R	Side clearance — hinge side flush with door — 90° rotation	3 15/16 (100)
S	Rear clearance	1 3/16 (30)
T	Vent (above refrigerator cabinet or around top of cupboard)	2 (50)
U	Door clearance — hinge side flush with chassis — full rotation	11 (280)
V	Door clearance — hinge side flush with door — full rotation	7 7/8 (200)

Connecting water

1 Ensure the refrigerator is NOT plugged into a power supply. Locate the water supply valve for cold water connection (Tee and tap fitting not supplied).
2 Locate the water hose set to complete the water connection installation.
3 Remove cap from water inlet valve at the back of the refrigerator A .
4 Connect one end of the water hose set to the water inlet valve b .
5 Push the plastic molded end (ferrule) into the water inlet valve. Tighten the compression nut until it is hand tight, then tighten one additional turn with an adjustable spanner.
6 Connect the other end of the water hose set to the water supply valve c . Push the plastic molded end (ferrule) into the water supply valve, tighten the compression nut until it is hand tight. Tighten one additional turn with an adjustable spanner.
7 Check the connections, turn on the water supply and check for leaks.

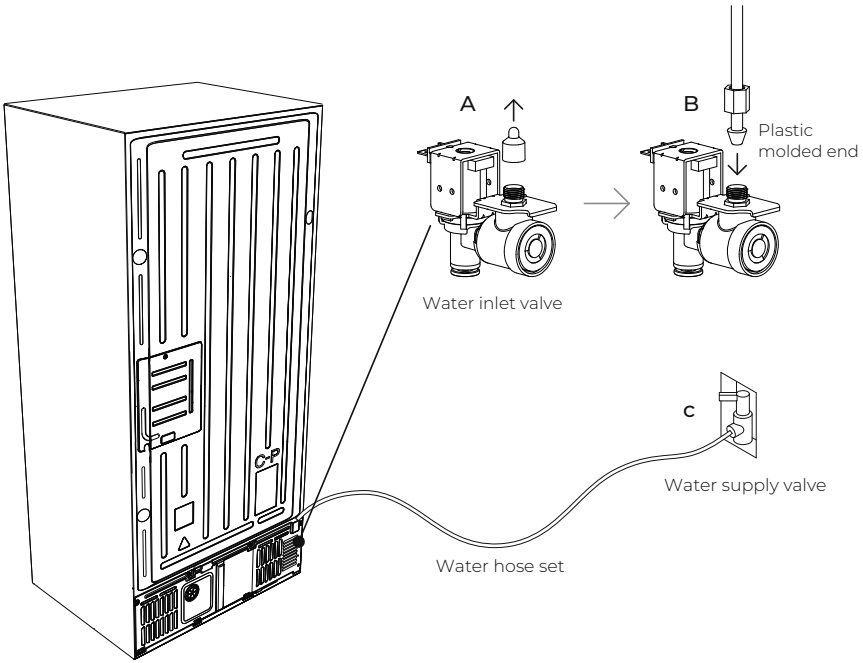

Positioning your refrigerator

Your Fisher & Paykel ActiveSmart™ refrigerator is fitted with front and rear rollers to allow you to easily move your refrigerator forward and backward.

Avoid moving your refrigerator sideways to prevent damaging the rollers or the floor covering surface.

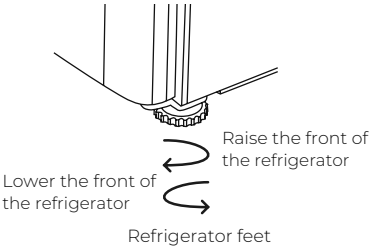

1. Your refrigerator will arrive with the front feet wound up making moving the product into its final location easy.
2. Roll the refrigerator into its final position making sure there is the correct air gap between the product and surrounding cabinetry. See minimum clearance in cabinetry dimensions table.
3. Adjust the front feet down until the refrigerator is leaning backward with the front approximately 3/8” (10mm) higher than the back. This will ensure a good door closing action.

Levelling of refrigerator doors

- Open the door that is out of alignment.
- Lift the door upwards.
- Clip the spacer onto the centre hinge pin A .
- Close the door to recheck alignment.

Example only

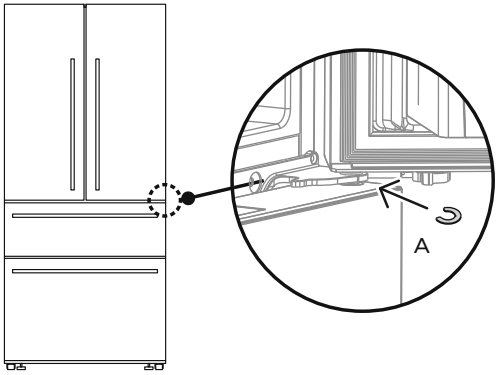

What to do if your product is unstable

1 Gently push the refrigerator back until the rear rollers contact the floor.
- Measure the gap under the front foot, which has come off the floor.
- Obtain some solid packing material (hardwood, plastic, etc) which fits firmly into the gap under the foot.

Note: Do not use metallic materials that may corrode, stain and/or damage floor coverings.

2 Wind both front feet up and roll the product out of position.
- Place the packing material in the location diagonally opposite the front roller that lifts off the floor.
- Make sure the packing material stays in place when the product is pushed back into position.
- Ideally, the packing material is large enough to rest against the back wall to prevent it from moving when the cabinet is pushed into position.

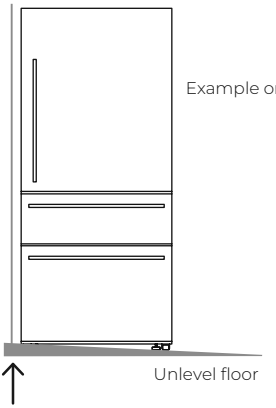

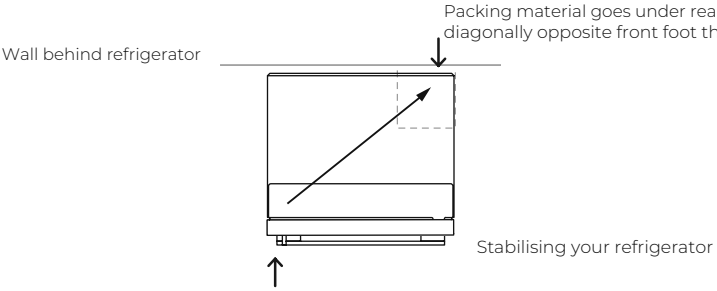

3 Roll the refrigerator back into position and adjust front feet as per 'Positioning your refrigerator' step 3 (check alignment and door closing action are satisfactory).
- Make small adjustments to front feet where necessary.
- Check that the product is stable (all four feet are on the floor). If not, repeat 1 and 2 .

Before you start using the Ice & Water or Automatic Ice function

Before first use, you need to flush water through the filter to remove impurities or trapped air in the water tank and filter system.

For Ice & Water

- Press the water dispenser pad to dispense 1gal (4L) of water.
  - Wait for 2 minutes before dispensing again.
- Dispense 1gal (4L) of water and then wait for another 2 minutes.
  - There may be carbon residue dispensed together with water. This is not harmful, and is normal during the flushing process.
- Dispense another 1gal (4L) of water.
  - This prevents excessive dripping of water from your dispenser.
- There may be a few drips of water coming out of the dispenser for a few days after installation. This is to clear the remaining trapped air in the dispenser.
- Ensure your refrigerator has cooled for at least 2 hours before use.

For Automatic ice model

1. Press to turn on the ice maker. The light above the button will illuminate indicating the ice maker is on.
2. Press , and together for 4 seconds then close the doors. The ice tray will empty the water into the bin below. The ice tray will only empty after the doors are closed.
3. Repeat step 2 to remove dust in the ice tray collected during manufacture and transport.
4. Empty the water, dry the bin and return it correctly.
5. Once your ice maker is turned on the first bin of ice may be discolored. This is not harmful and normal during the flushing process. Discard the first full bin of ice made. Your ice maker is now ready for use.

Note: The performance of your water filter will increase with use, reaching optimum performance after two to three full bins of ice.



Water dispenser

Before placing food in the fresh food or freezer compartments

- Remove all internal packaging. Ensure that all transit clips are removed from the refrigerator. These are small rubber stoppers located at the back of the shelves.
- Clean the inside of the appliance with a mix of warm water and a small amount of liquid detergent. Use a soft cloth to remove dust collected during manufacture and transport.
- Allow the refrigerator and freezer to run empty for 2 – 3 hours to allow each compartment to cool to the appropriate temperature.
- The appliance may have an odor on its initial operation, this will go when the refrigerator and freezer have cooled sufficiently.

Energy efficiency

For the most energy efficient use of your appliance:

- Ensure your refrigerator has adequate ventilation.
- Do not cover your appliance with any material that will prevent air from flowing around the cabinet sides.
- Ensure you vacuum around the appliance to remove dust and accumulated debris. Keep the appliance and its cabinetry free of dust by wiping down with a dry, lint-free cloth (refer to section 'Cleaning and caring for your refrigerator').
- Allow good clearances in front of air ducts within the cabinet for maximum cold air distribution.
- Cool down hot foods before placing them in the appliance.
- Do not overfill the compartments.
- Keep door openings to a minimum.
- Select a temperature setting that isn't too cold.
- Check your door seals for leaks.

ACTIVESMART™ SPECIAL FEATURES

SmartTouch control panel

The control panel is located in the inside front of the refrigerator. It enables you to view and modify all the features and options of your refrigerator.



SmartTouch control panel variants for ActiveSmart™ refrigerators. Special features available only on selected models.

SmartTouch CONTROL PANEL FEATURES		
	Compartment	Allows you to select which compartment to adjust the temperature.
	Alarm mute	Deactivates the door alarm for 20 minutes.
	Digital display	Displays the set temperature of the compartments. To change between Celsius and Fahrenheit on the display: • Press + for 6 seconds.
−	Colder	Reduces the temperature of compartments.
+	Warmer	Increases the temperature of compartments.
	Fast Freeze	Boosts the freezing speed by dropping the freezer to its coldest temperature for 12 hours.
	Bottle Chill	Allows you to rapidly chill your beverage for a set time of 15 minutes.
	Ice On/Off	Indicates when automatic ice maker is on or off.
	Ice Boost	Increases ice production up to 30% from standard ice making.
	Key lock	Indicates when the buttons on the control panel are disabled.
	Filter change indicator	Icon will illuminate indicating when the water filter requires changing.
	Sabbath mode	All alarms, lights and displays are deactivated for 80 hours.
	Key mute	Deactivates sounds of all button presses.

ACTIVESMART™ SPECIAL FEATURES

External display

This display enables you to lock the water dispenser; indicates to you when ‘Bottle Chill’ is activated and when your water filter requires changing.

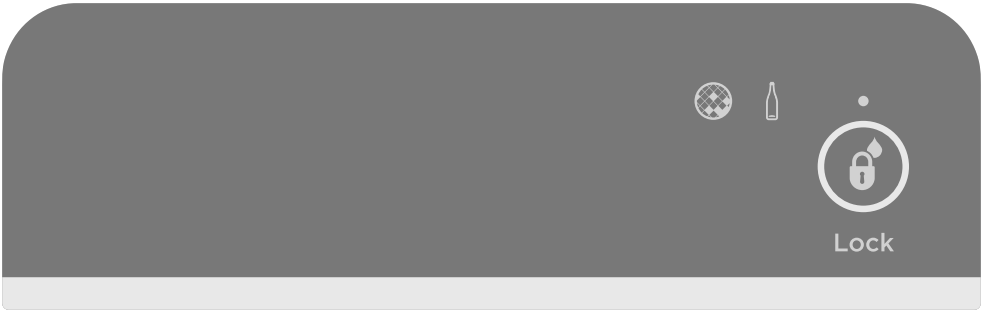

Electronic external display

EXTERNAL DISPLAY FEATURES		
 Lock	Dispenser lock button and LED light	Locks/unlocks the water dispenser. When locked the LED above the button will illuminate.
	Bottle Chill indicator	Icon will illuminate indicating when ‘Bottle Chill’ is activated and flashes when beverage is ready.
	Filter change indicator	Icon will illuminate indicating when water filter requires changing.

Humidity control system

Humidity control lids

- The control lids are fitted to the fruit and vegetable bins of your refrigerator.
- These lids provide a humid microclimate to extend the storage times of fruit and vegetables.
- The lids have specially designed grooves that retain moisture to prevent condensation from dripping onto the fruit and vegetables at times of high humidity.

Temperature control

- Once you turn on your refrigerator for the first time, the cooling system will automatically cool all compartments to their set temperatures.
  - This will take between 2 – 3 hours.
- The internal control panel enables you to change and control the temperature of all compartments accurately and independently regardless of the temperature or humidity of the surroundings whether it is summer or winter.
- Check the operation of your refrigerator once every 4 hours for the first 24 hours.
- If at any time you notice that the refrigerator is not cooling properly, call your installer/ Fisher & Paykel trained and supported service technician to verify the unit is operating properly. Take immediate steps to prevent food from spoiling by storing in another refrigerator or freezer.
- The internal control panel default setting is to show the set temperature for the fresh food compartment.

Adjusting the temperature — Fresh food compartment

- Press once to adjust the fresh food compartment temperature.
- The fresh food compartment light will illuminate.
- Press + to increase the temperature, press − to decrease the temperature.

Adjusting the temperature — Frozen food compartment (freezer)

- Press twice to adjust the frozen food compartment temperature.
- The frozen food compartment light will illuminate.
- Press + to increase the temperature, press − to decrease the temperature.

Door alarms

- If the fresh food compartment door is left open, the alarm will beep after 90 seconds, if the freezer door is left open the alarm will beep after 60 seconds.
- If either of the doors remains open, subsequent beeps will sound every 30 seconds for 5 minutes.
- If either door remains open for 5 minutes or longer, an alarm will sound continuously and the interior compartment light(s) will turn off.

Alarm Mute

- To activate, press once.
- The light above the button will illuminate to indicate the refrigerator is muted.
- If the doors are left open for 5 minutes or more, the compartment light turns off and normal door alarms are suspended.
- 'Alarm Mute' will deactivate after 20 minutes.
- To deactivate manually, press again.
- Closing the door also deactivates the 'Alarm Mute'
  Note: When the fresh food or freezer compartment door is left open for longer periods of time, food quality and/or safety may be compromised.

Key Mute

Key mute allows you to silence all button presses.

- To activate key mute, press for 4 seconds.
- The icon on the internal control panel illuminates.
- Once key mute is activated, all key sounds are silenced.
- Door alarms and the 'Bottle Chill' alarm are still operational.
- Deactivate by pressing for 4 seconds, the icon will no longer illuminate.

Key Lock

'Key Lock' allows you to disable the buttons on the internal control panel.
This is useful when cleaning your refrigerator.

- To activate 'Key Lock' press and + together for 4 seconds.
- The icon on the internal control panel will illuminate.
- Pressing any of the buttons will sound several beeps to tell you that they are disabled.
- 'Key Lock' will not automatically deactivate. To deactivate, press the and + buttons for 4 seconds.
- The icon will not illuminate.

Sabbath Mode activation

In Sabbath mode, alarms, lights and displays are deactivated for 80 hours.

- To activate Sabbath mode, press and together for 4 seconds.
  - The icon on the internal control panel will illuminate.

Once in Sabbath mode:

- The interior light will not turn on when you open the refrigerator.
- The door alarms will not operate.
- The display will not illuminate, except the Sabbath mode icon.
- The internal and external control panels will not operate.
- Sabbath mode automatically deactivates after 80 hours.

- To deactivate manually, press and together for 4 seconds.
  - The icon on the internal control panel will not illuminate.

Note: If you turn off your refrigerator while in Sabbath mode it will resume automatically once the refrigerator is switched on again.

Using your water dispenser

Ensure you have followed the steps outlined in 'Before you start using the Ice & Water or Automatic Ice function' prior to your first use of the water dispenser.



Water dispenser

Dispensing

- Your water dispenser is designed for one-handed operation.
- To dispense water, gently press the dispensing pad with a glass or container.
- To stop the flow of water, simply pull your glass or container away from the dispensing pad.
- Pressing hard against the dispensing pad will not increase the flow or dispense more water.

IMPORTANT!

To avoid damage to property or personal injury do not put hands, fingers or objects up the dispenser opening.

Dispenser Lock

The dispenser lock is located on the external display and can be activated to prevent water from being dispensed. This is useful when you are cleaning the external display or when there are small children around.

- To activate dispenser lock, press for 4 seconds.
- The light above the button will illuminate.
- When the dispenser pad is pressed, several beeps will sound to alert the user that water cannot be dispensed.
- To deactivate dispenser lock and dispense water, press the for 4 seconds. The light above the button will not illuminate.

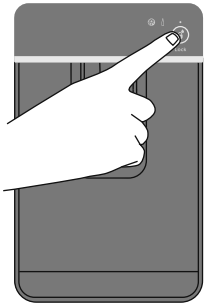

Dispenser Lock

Water filter

The water supplied to your refrigerator is filtered to remove impurities through a filter located internally at the top right corner of the refrigerator. Replace your filter cartridge every 6 months.

- There is a replacement indicator icon on the internal control panel (Ice & Water and Automatic Ice models) and external display which will appear when the filter needs replacing. The icon will flash, as a reminder, when water is dispensed.
- Replacement filter cartridges are available from your Fisher & Paykel dealer, online or from a Fisher & Paykel service technician. The details of the replacement filter cartridge are labelled on the cartridge.

Changing the water filter cartridge

Guidance of how to replace your water filter and reset your indicator icon can be found at fisherpaykel.com/water-filter.

Using your ice maker

Ice On/Off

Your ice maker is designed to automatically dispense ice into the ice storage bin below until it detects the bin is full. The more ice you use, the more it makes.

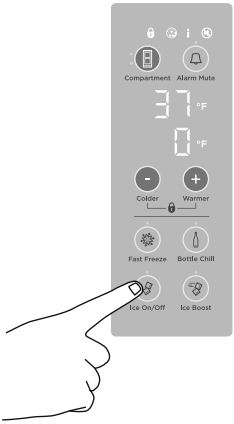

Turning ice maker on

First use

- The ice maker will be off when you turn your refrigerator on for the first time after installation. The light above the 'Ice On/Off' icon will be off.

1 To turn your ice maker on press to turn on the ice maker. The light above the button will illuminate indicating the ice maker is on.

2 Press the , and together for 4 seconds then close the doors. The ice tray will empty the water into the bin below. The ice tray will only empty after the doors are closed.

3 Repeat step 2 to remove dust in the ice tray collected during manufacture and transport.

4 Empty the water, dry the bin and return it correctly.

5 Once your ice maker is turned on the first bin of ice may be discoloured. This is not harmful and normal during the flushing process. Discard the first full bin of ice made. Your ice maker is now ready for use.

- Carry out the above steps after a holiday/vacation or extended periods of not using ice.

Note: The performance of your water filter will increase with use, reaching optimum performance after two to three full bins of ice.

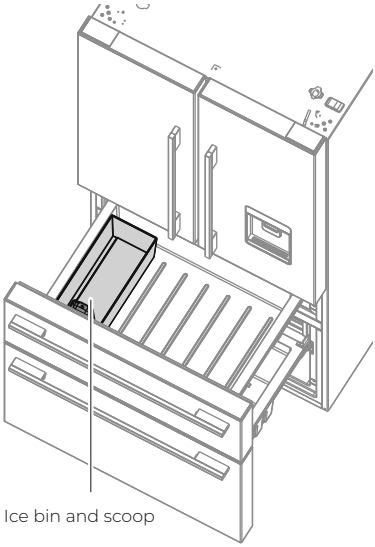
Ice bin and scoop

Turn your ice maker off if:

- There is no water supply for several hours.
- You are removing the ice storage bin for a period of time.
- You are going on holiday/vacation.

Information about your ice maker

- Your automatic ice maker will produce approximately eight cubes of ice every 3 – 4 hours, depending on the freezer compartment temperature and the number of door openings.
- When the 'Ice Boost' function is activated, ice production will increase up to 30% from standard ice making.
- The ice cube tray will fill with water.
- When cubes are frozen, they will be ejected from the ice tray into the ice storage bin.
- Ice making will continue until the storage bin is full.
- Ice making will resume once you start to use the stored ice.
- Your Ice & Water model comes with a smaller ice bin inside the larger freezer bin.
- Attached to the ice storage bin is the scoop for the ice. This scoop provides hygienic access to the ice.
- If a large amount of ice is required, remove an ice storage bin and allow ice to fall into the larger bin.
- For maximum ice storage, level the stored cubes with the ice scoop.
- If ice is not used often, old cubes will become cloudy, taste stale, will shrink and may stick together. Empty the ice storage bin periodically and wash in lukewarm water. Dry thoroughly and place back into the correct position.

IMPORTANT!

- **Avoid contact with the moving parts of the ice maker ejector mechanism, and do not place your fingers on the automatic ice making mechanism while the refrigerator is in operation.**
- **Do not use ice cubes that may have become discolored, usually with a green-blue color. If such discoloration is noted, discard the ice cubes and contact your Fisher & Paykel trained and supported service technician.**
- **Ensure the ice maker is connected to the filter and to a drinkable water supply only.**
- **Installation of the water connection to the ice maker must be completed by a Fisher & Paykel trained and supported service technician or a qualified plumber.**

Bottle Chill

This function allows you to rapidly chill your beverages in the freezer for a set time of 15 minutes. The time taken to chill depends on the size of your beverage. If your beverage is not cold enough after 15 minutes, return it to the freezer and reset the 'Bottle Chill' function.

- To activate, press on the internal display. The 'Bottle Chill' light will illuminate when the function is activated. The icon will illuminate on the external display.
- An alarm will sound after 15 minutes to remind you to remove your beverage.
  - The icon will flash on the external display. Press any button on the external display to silence the alarm.
- To deactivate 'Bottle Chill' before 15 minutes, press again on the internal control panel.
- When 'Bottle Chill' is deactivated, the light will not illuminate and the icon is not visible on the external display.

Fast Freeze

'Fast Freeze' boosts the freezing speed by dropping the freezer to its coldest temperature for 12 hours, which helps to retain freshness, texture and taste during the freezing process.

- To activate, press on the internal display. The 'Fast Freeze' light will illuminate when the function is activated.
- To deactivate before the 12 hours has elapsed, press again.
  When 'Fast Freeze' is deactivated the light is off.
- For best results activate the function before it is required. Alternatively, activate it when placing food into the freezer.

Ice Boost

This function is for use when you require more ice, eg for a party. The 'Ice Boost' function increases ice production up to 30% from standard ice making and deactivates automatically after 24 hours.

- When you first turn your ice maker on, the 'Ice Boost' function is off.
- To turn this function on, press button. The light above the button will illuminate when the 'Ice Boost' function is on.
- The 'Ice Boost' function is paused once your ice bin is full.
- To manually deactivate this feature press again. The light above the button will not illuminate.
- Activating the 'Ice Boost' function will automatically turn on ice making.
- Deactivating ice making automatically deactivates the 'Ice Boost' function.

Bottle holder (where fitted)

- The bottle holders can be used to store a variety of bottles.
- To position the bottle holder in your refrigerator, slot the back edge of the bottle holder onto the back trim of any shelf in the fresh food compartment.
- Unused bottle holders can be stacked up on top of one another so they do not take up unnecessary shelf space.
- Bottles are best stored with the neck of the beverage facing the front of the refrigerator.

Glass shelves

- Standard glass shelves can not be repositioned in your refrigerator. Refer to 'Cleaning and care — Shelving' for details on how to remove the standard glass shelves for cleaning.

Cantilever glass shelves — half-width and full-width

- The cantilever glass shelves are designed to be strong and versatile.
- The half-width and full-width shelves are removable and can be repositioned in your refrigerator.
- Place the half-width shelves side-by-side when you store large items such as platters.
- Place the half-width shelves at different levels to maximise the storage space when you store items of varying heights.

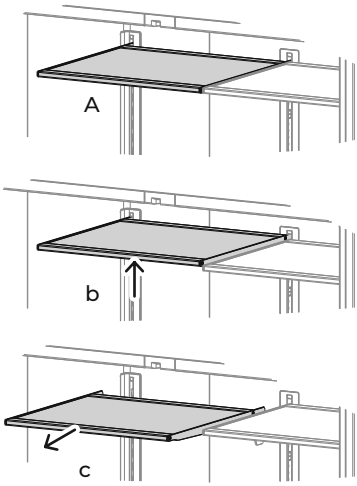

To remove for repositioning

1 Hold the front and back edge of the shelf firmly A .
2 Push the shelf up vertically to dislodge from back support lugs b .
3 Slide the shelf towards you c .

Drip tray

- The drip tray is designed to fit into the bottom of the water dispenser panel.
- To insert the tray ensure the rounded sides are fitted into the dispenser pane first.
- The purpose of the tray is to capture drips of water that may fall after dispensing.
- The tray can be removed for cleaning.

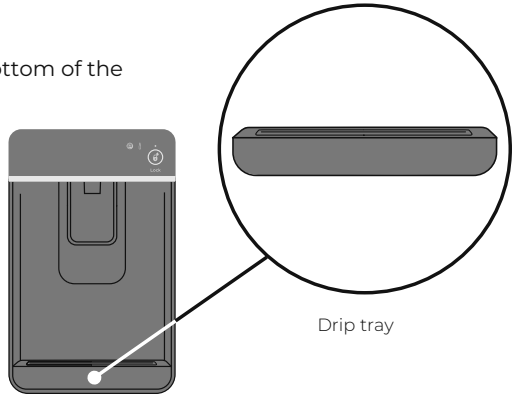

CLEANING AND CARE

Exterior

Stainless exterior doors

- Clean the exterior door with liquid dishwashing detergent dissolved in warm water and a soft cloth.
- Dry the door with a lint-free cloth.
- Do not use any abrasive, stainless steel cleaners or solvents on the door surface.

Other exterior surfaces

- Clean all other exterior surfaces with a mix of warm water and liquid dishwashing detergent, and a soft cloth.
- Rinse with clean water and dry with a clean, lint-free cloth.

Door gasket

- Clean the magnetic door gasket every three months with a toothbrush, and liquid detergent dissolved in warm water.
- Apply petroleum jelly lightly on the hinge side of the gasket to ensure cleanliness and maintain a good seal.

Cabinet surround

To maximise operating efficiency regularly vacuum the flooring around your refrigerator.

- Cleaning behind your refrigerator is required once or twice a year.
- Wind up the feet and carefully ease the refrigerator out of its position. Switch off and unplug.
- Vacuum the flooring behind your refrigerator and the rear compartment cover (where fitted) to remove dust accumulation. Use a dry lint-free cloth to clean the refrigerator walls and surrounding cabinetry.
- After cleaning, plug in and switch on. Push the appliance into position and wind feet down.

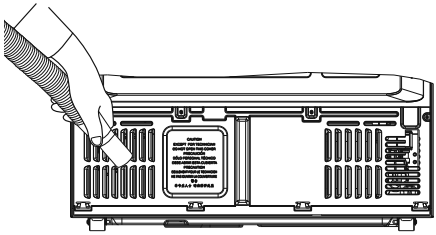

Cleaning the rear compartment cover

WARNING!

Electric Shock Hazard. Do not remove rear compartment cover. This may expose you to the risk of an electric shock.

CLEANING AND CARE

External display and water dispenser

- Activate the 'Dispenser lock' function to prevent water from dispensing when cleaning refer 'Dipenser lock' section for details.
- Clean the pad and interface panel with a damp, soft lint-free cloth.

Drip tray

- To clean, remove the drip tray from the dispenser panel
- Pull the two halves of the tray apart.
- Clean with liquid detergent dissolved in water and a soft lint-free cloth.
- Rinse with clean water and dry with a clean, lint-free cloth.
- Securely clip the two halves together.
- Re-insert the drip tray back into the dispenser panel.

Interior

- It is important to keep the interior of the refrigerator and freezer clean to help prevent food from becoming contaminated during storage.
- The amount and types of food stored determines how often cleaning should be carried out in the refrigerator (ideally once every 1 – 2 weeks).
- Remove the shelves from cabinet and door. Wash shelves and storage bins in warm water and detergent; rinse in clean water and dry before replacing.
- Wipe all interior surfaces, including all door shelves, using only liquid dishwashing detergent dissolved in warm water or baking soda dissolved in warm water (add 1tsp of baking soda to every 16.9 Fl Oz/500ml of water) and a soft lint-free cloth. Rinse with clean water and dry with a clean, lint-free cloth.
- Add a few drops of vanilla essence or vinegar to the water before cleaning to help remove any odor of "stale refrigerator".
- Do not use harsh chemicals, abrasives, ammonia, chlorine, bleach, concentrated detergents, solvents or abrasive scouring pads on any part of your refrigerator. Some of these chemicals may dissolve, damage and/or discolor the interior of your refrigerator.

Glass shelves (including cantilever) and Bottle Holders

- Clean with liquid detergent dissolved in warm water and a soft lint-free cloth.
- Rinse with clean water and dry with a clean, lint-free cloth.

Ice storage bin

- Clean your ice bin and discard any old ice in the bottom of the bin(s) regularly
- Use only liquid detergent dissolved in warm water and a soft lint free cloth when cleaning. Rinse with clean water and dry with a clean, lint-free cloth.
- Ensure that the ice scoop is placed in correct position in the bin, right hand side or at the front of the bin (model dependent).
- It is important to regularly clean your ice bin and discard any old ice in the bottom of the bin. Do not clean the ice maker components.
- Turn OFF the ice maker before you leave for a vacation/holiday.
- On your return, turn on the ice maker and discard the first bin of ice.
  Refer to 'Using your ice maker' section.

IMPORTANT!

Many commercially available cleaning products contain solvents that may attack the plastic components of your refrigerator and cause them to crack. It is important to use only warm water and a small amount of liquid dishwashing detergent on any components inside and outside your refrigerator. Avoid using anti-bacterial cleaning products on either the interior or exterior of the cabinet as they may cause rusting of metal components and cracking of plastic components.

Holiday/Vacation

Before leaving:

- Turn the ice maker to OFF on the internal control panel.
- Shut off the water supply to the refrigerator.

On return:
Refer to 'Using your ice maker' for details.

How to remove shelving and bins for cleaning

Shelving

To remove a shelf:

1 Hold the shelf firmly and pull the shelf towards you A .
2 Lift the shelf up vertically b .
3 Slide the shelf towards you c .

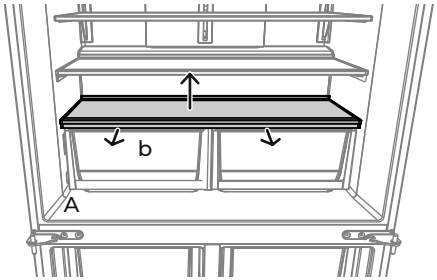

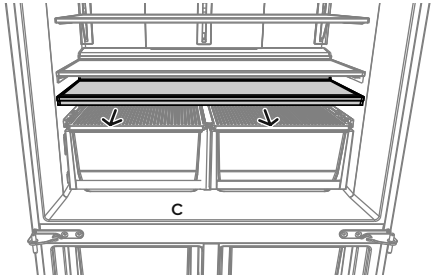

Note: Refer to 'ActiveSmart™ operating instructions' – 'Glass shelves' for details on how to remove cantilever glass shelves

Humidity control lid

To remove:

1 Remove the shelf directly above the bins, follow the steps above.
2 Hold the lid firmly and lift the outside edge of the lid up vertically A .
3 Slide the lid towards the outside wall of the fridge until the lid unclips from the centre bracket b .
4 Pull the lid towards you.

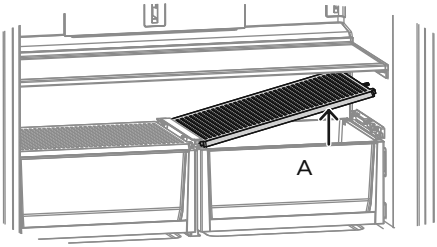

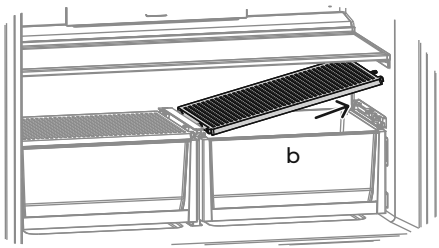

Fixed bins

To remove:

1 For ease of removal, empty food from the bin first.
2 Hold the centre front of the bin handle.
3 Lift vertically to unclip from the runners and pull bin towards you to remove A .
4 Push both runners back into refrigerator b .

To replace:

1 Extend the runners out from your refrigerator.
2 Place the bin on top of the runners.
3 Push the bin down slowly until you feel it clip.

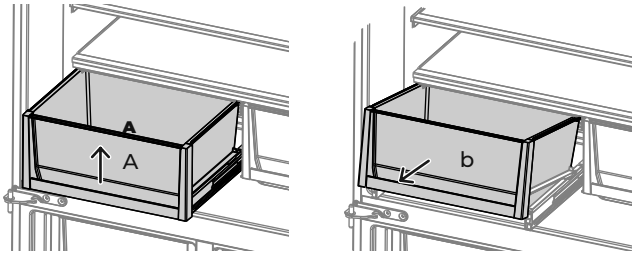

Note: The freezer bins are permanently fixed. They cannot be removed from the freezer compartment. To clean simply wipe with a soft, damp cloth.

IMPORTANT!

- **Ensure that bins are securely clipped onto the runners before use.**
- **Bin runners are pre-lubricated, and will not need to be re-lubricated during their life. Do not attempt to clean grease from the runners, as this will affect their ability to function. Do not immerse runners in water.**

Freezer bins

The top and bottom bins can be removed by lifting the bins vertically out of the runners.

To remove the center bin:

1 For ease of removal, empty food from the bin first.
2 Push down on the clips on both sides of the bin
3 Lift vertically to unclip from the runners and pull bin towards you to remove.
4 Push both runners back into refrigerator.

To replace the center bin:

1 Extend the runners out from your refrigerator.
2 Place the bin on top of the runners.
3 Push the bin down slowly until you feel it clip.

FOODCARE

For best food care

- Store only high-quality, fresh food in your appliance.
- Store perishable foods in the appliance immediately after purchase. Storing at room temperature increases the rate of deterioration and can allow harmful microbial growth.
- Foods such as meat, poultry and seafood should be well wrapped or sealed in suitable packaging to prevent dehydration, color deterioration, loss of flavor, and transfer of odor.
  - We recommend storing these foods on the bottom shelf of your appliance or in one of the bins to prevent potential spills and cross-contamination with other foods.
- Ensure hot foods and beverages are cooled sufficiently before placing them into the appliance. Hot items may cause other foods to warm to unsafe temperatures. Hot items may also cause sealed items to sweat/condensate — which is undesirable.
- Beverages are best stored standing upright in the door shelves or on the bottle racks provided.
- Ensure raw and cooked foods are stored separately to avoid cross-contamination.
- Consume food items within the recommended storage times. Discard foods that show sign of spoilage.
- Keep door openings to a minimum to maintain optimum storage temperatures inside your appliance.
- We recommend using 'Fast Freeze' when you are adding food items to your appliance, such as after grocery shopping. This feature will ensure the food is chilled/frozen within the shortest period of time, locking in the freshness and extending the shelf life of your food.

Items stored in your refrigerator

- Dairy items such as butter and cheeses should be stored in the covered door shelf to minimize any transfer of odor or odor absorption from other foods.
- Eggs should be stored in their carton to avoid absorption of strong odors through their porous shell structure.

Items stored in your freezer

- We recommended cooling carbonated beverages only when the 'Bottle Chill' function is active.
  - Do not store carbonated drinks without this function in the freezer. Failure to remove beverages could lead to freezing liquid and the likelihood of bottle/can explosion.
- Ensure air is removed from packaging to avoid large formation of ice crystals and prevent freezer burn.
- To maintain freshness and quality, we recommend defrosting foods in the refrigerator. Ensure partially or fully defrosted foods are never re-frozen — cook immediately.

MOVING OR STORING YOUR APPLIANCE

If your refrigerator is turned off for any reason, wait 10 minutes before turning it back on. This will allow the refrigeration system pressures to equalise before restarting.

Moving your refrigerator

- Turn off the refrigerator and unplug from the power point. Remove all food.
- Turn the adjustable feet to the right as far as they will turn.
- Ease the refrigerator out of its position. Tuck the power cord away, tape the shelves in place and tape the doors closed. If the cabinet needs to be placed at an angle or laid down, carefully lay it on its side (the left hand side when viewed from the front).
- Relocate and install. If the appliance has been left on its side for any length of time, leave it standing upright as long as you can (a few hours) before turning on.

Storing your refrigerator

- When storing your cleaned appliance, leave the doors open. This allows air to circulate and prevents the build up of bacteria and moulds.
- Before using again, clean well using a mixture of warm water and a small amount of liquid dishwashing detergent. Rinse with clean water and dry with a soft lint-free cloth.

Holiday/Vacation time

Leave your refrigerator operating while you are on holiday/vacation.

ACTIVESMART™ SOUNDS

Normal refrigerator sounds

Your refrigerator is designed with innovative ActiveSmart™ features that can produce sounds that may be different from your old refrigerator.

Normal operational sounds include:

- Fan air flow sound. ActiveSmart™ refrigerators have fans which change speed depending on demand. During cooling periods, such as after frequent door openings, fans circulate the cold air in the refrigerator and freezer compartments producing some air flow sound. This is quite normal.
- Cracking or popping sound which may occur when the defrost function is operating.
- Running water sound. This is the liquid refrigerant in the system and can be heard as a boiling or gurgling noise.
- An audible hissing sound after closing the freezer door. This is due to the pressure difference between the warm air that has entered the cabinet and suddenly cooled, and the outside air pressure.
- Other sounds may be heard for the following reasons:
  - Cabinet not level.
  - Floor uneven or weak.
  - Bottles or jars rattling on shelves.
- If this is your first refrigerator with an ice maker, you will hear occasional sounds that may be unfamiliar. They are normal ice making sounds and are not cause for concern.
- The following sounds are normal with the operation of an ice maker:
  - Motor operation (low humming).
  - Running water as the ice maker and/or water tank fills.
  - Water valve opening and closing (hissing sound).
  - Ice being loosened from the ice moulding tray (cracking).
  - Ice dropping into bin (clunking).

TROUBLESHOOTING

If there is a problem with your appliance, please check the following points before contacting your local Fisher & Paykel trained and supported service technician or the Customer Care Centre.

Product parts and accessories can be purchased through Fisher & Paykel Customer Care Centre or online at fisherpaykel.com (this service is available to selected markets only).

PROBLEM	POSSIBLE CAUSES	WHAT TO DO
Appliance does not operate.	No electricity at power outlet.	Check that the plug is correctly connected and power switched on.
		Check another appliance at the same outlet.
		Check house fuse.
Light not working.	Light not functioning.	The LED light cannot be serviced by the user. Contact your Fisher & Paykel Dealer or Fisher & Paykel trained and supported service technician.
	Refrigerator not working.	Check refrigerator is turned on at wall.
Light and display not working.	Product in 'Sabbath Mode'.	Press and hold and together for 4 seconds.
Motor operates for long periods.	Hot weather.	Minimise door openings to allow temperature to stabilise.
	Frequent door openings.	
	Large amount of food recently added.	
	Temperature control set too low.	Refer to section 'Temperature control'.
	Doors not sealing properly.	Check that cabinet is level and gasket seals are clean.
Storage compartments too warm.	Temperature setting not correct.	Refer to section 'Temperature control'.
	Frequent door openings.	Minimise door openings to allow temperature to stabilise.
	Large amount of food recently added.	
Food freezing in the refrigerator.	Temperature setting not correct.	Refer to section 'Temperature control'.
	Food placed directly in front of air outlets.	Move chill sensitive foods away from the centre back of the shelves.
Unfamiliar noises.	Cabinet not stable or level.	Refer to sections 'Installation instructions' or 'ActiveSmart™ sounds'.
	Freezer is defrosting.	

TROUBLESHOOTING

PROBLEM	POSSIBLE CAUSES	WHAT TO DO
Water in the vegetable bins.	Condensation is formed by the water produced by fruit and vegetables.	A small amount of condensation is beneficial for fruit and vegetable storage.
		Wipe out water with a cloth.
Exterior of cabinet is warm.	This is normal.	
Warm spot on central door seal.	You may feel a warm spot at times on the central seal between the two refrigerator doors.	This is perfectly normal and is part of the normal refrigerator operation.
Condensation on outside of refrigerator/ freezer.	Not unusual during periods of high humidity.	Wipe dry.
Condensation inside fresh food compartment.	Frequent or long door openings.	Minimise door openings.
	Door gasket leaking.	Check that gasket is sitting flat and sealing tightly.
	Not unusual during periods of high humidity.	Wipe dry.
Door handles out of alignment.	With time and usage, movement may occur.	Refer to section 'Installation instructions'.
Tray/bin does not slide in and out evenly.	Packaging trapped.	Check to ensure no food or packaging is trapped behind the tray/bin.
	Runners not extending fully.	Holding onto sides of tray/bin, extend the runners fully by using a firm pull — this will reset the runner.
Appliance operating inefficiently.	Accumulation of dust on or behind the rear compartment cover.	Refer to section 'Cleaning and care'. If problem persists please contact Customer Care.
Cannot adjust temperature in frozen food compartment.	Either Bottle chill, fast freeze or ice boost is activated	Deactivate Bottle chill, fast freeze or ice boost if function is not desired

TROUBLESHOOTING

PROBLEM	POSSIBLE CAUSES	WHAT TO DO
Automatic ice maker does not work.	Ice maker has not been turned on.	Switch on ice maker.
	Bin is in the wrong way or there is no bin in place.	Place bin so scoop is on the left side.
		Ice bin sits directly under ice maker on top left side of freezer.
	Water supply turned off or not connected.	Connect water supply.
	Freezer compartment not working.	Contact Customer Care.
	Water pressure too low.	Check water pressure.
	Water line kinked/squashed.	Check water line for kinks/squashing.
	Filter clogged.	Water filter may need replacing.
Ice cubes have odour/taste.	Unsealed packages may be transmitting odour/taste.	Old cubes need to be discarded.
		Ensure food packaging is sealed.
	Interior of freezer needs cleaning.	Ice storage bin needs to be emptied and washed.
		Clean refrigerator.
	Poor taste from incoming water.	Filter may need to be replaced with new one.
		Force 2 – 3 ice tray flips.
Slow ice cube freezing.	Door may have been left ajar.	Close door.
	Freezer compartment too warm.	Turn temperature to a colder setting.

TROUBLESHOOTING

PROBLEM	POSSIBLE CAUSES	WHAT TO DO
Wet ice/ ice clumping.	Low water pressure.	Check water pressure.
	Filter blocked.	Replace filter.
	Long freezer door openings.	Gently tap ice with scoop to unstick or, if large clumps occur, empty ice bin and make new ice.
	High ambient temperature.	
	Ice bin left out of freezer compartment for a length of time.	
	Ice will stick together over time.	
Filter warning light is flashing.	Filter needs replacing.	Replace filter as soon as possible.
Ice buildup inside freezer compartment.	Freezer door not closing tightly.	Arrange items in freezer so door can close tightly.
		Check and clean door gasket seal.
Ice maker makes unfamiliar sounds or seems too loud.	Normal ice maker operation.	Refer to section 'ActiveSmart™ sounds'.
Ice boost function not increasing rate of ice production.	Ambient temperature very warm.	Minimise door openings.
	Refrigerator is in high usage.	

TROUBLESHOOTING

PROBLEM	POSSIBLE CAUSES	WHAT TO DO
Water has poor taste/odour.	Refrigerator not used for an extended period.	Dispense 1 gal (4L) of water so fresh water supply is replenished.
	New filter installed	
Water dispenser does not work.	Water supply turned off or not connected.	Turn water on.
		Press dispenser for 4 minutes to remove trapped air from water line and to fill the water system.
	Supply line may be blocked.	Check supply for kinks or leaks.
	On first installation there may be air in water system.	To remove air, run 3/4 gal (3L) of water through the dispenser.
	Filter may be blocked and need replacing.	Replace filter (see your service and warranty booklet provided with your refrigerator).
	'Dispenser Lock' activated.	Press and hold the button for 4 seconds.
	Water frozen in tank.	Increase temperature to a warmer setting in fresh food compartment and freezer.
Water in first glass is warm.	Water dispenser not used for extended period.	Discard first glass of water dispensed.
	Tank capacity used recently.	Allow water time to cool.
Drips overflow drip-shelf.	Air trapped in tank.	Flush 3/4 gal (3L) water through dispenser, stopping intermittently.
	New filter installed.	Dispense 1 gal (4L) of water through the dispenser, and then another 1 gal (4L) after 4 minutes.
Water flow rate has slowed down.	Filter cartridge is restricted.	Replace filter as soon as possible.

MANUFACTURER'S SERVICE & WARRANTY

For details of your Manufacturer's Warranty and contacts for servicing, please refer to your separate 'Service & Warranty' book provided with your refrigerator.

This product has been designed for use in a normal domestic (residential environment). This product is not designed for any commercial use. Any commercial use by the customer will affect this product's Manufacturer's Warranty.

Complete and keep safe for reference:

Model _____

Serial No. _____

Purchase Date _____

Purchaser _____

Dealer _____

Suburb _____

Town _____

Country _____

FISHERPAYKEL.COM

© Fisher & Paykel Appliances 2019. All rights reserved.
The product specifications in this document apply to the specific products and models described at the date of issue. Under our policy of continuous product improvement, these specifications may change at any time. You should therefore check with your Dealer to ensure this dcoument correctly describes the product currently available.

US CA