HOSHIZAKI

Instruction Manual

Commercial Series
Refrigerated Kitchen Equipment

Models
Refrigerated Equipment Stand

hoshizakiamerica.com

Issued: 10-27-2016

⚠ WARNING

Only qualified service technicians should install and service the appliance. To obtain the name and phone number of your local Hoshizaki Certified Service Representative, visit www.hoshizaki.com. No installation or service should be undertaken until the technician has thoroughly read this Instruction Manual. Likewise, the owner/manager should not proceed to operate the appliance until the installer has instructed them on its proper operation. Failure to install, operate, and maintain the appliance in accordance with this manual may adversely affect safety, performance, component life, and warranty coverage. Proper installation is the responsibility of the installer. Product failure or property damage due to improper installation is not covered under warranty.

Hoshizaki provides this manual primarily to assist qualified service technicians in the installation, maintenance, and service of the appliance.

Should the reader have any questions or concerns which have not been satisfactorily addressed, please call, send an e-mail message, or write to the Hoshizaki Technical Support Department for assistance.

Phone: 1-800-233-1940; (770) 487-2331
Fax: 1-800-843-1056; (770) 487-3360

E-mail: techsupport@hoshizaki.com

HOSHIZAKI AMERICA, INC.
618 Highway 74 South
Peachtree City, GA 30269
Attn: Hoshizaki Technical Support Department

Web Site: www.hoshizaki.com

NOTE: To expedite assistance, all correspondence/communication MUST include the following information:

- Model Number _____
- Serial Number _____
- Complete and detailed explanation of the problem.

IMPORTANT
This manual should be read carefully before the appliance is installed and operated. Read the warnings and guidelines contained in this manual carefully as they provide essential information for the continued safe use and maintenance of the appliance. Retain this manual for any further reference that may be necessary.

CONTENTS

Important Safety Information 4
I. Installation Instructions 7
A. Location 7
B. Checks Before Installation 8
C. Setup 8
D. Electrical Connection 9
E. Final Checklist 10
II. Operating Instructions 11
A. Important Notes About Usage 11
B. Startup 13
C. Controls and Adjustments 13
1. Temperature Display 13
2. Adjusting the Temperature Setpoint 14
3. Changing the Temperature Display Scale (°F or °C) 14
D. Control Module Icons 14
E. Defrost 15
F. Alarm Safeties 15
G. Food Storage 16
H. Safety Devices 16
I. Cooling Performance 17
J. Cabinet Condensation 17
III. Cleaning and Maintenance Instructions 18
A. Cleaning 18
B. Maintenance 20
IV. Preparing the Appliance for Periods of Non-Use 21
V. Disposal 22

Important Safety Information

Throughout this manual, notices appear to bring your attention to situations which could result in death, serious injury, damage to the appliance, or damage to property.

⚠ WARNING **Indicates a hazardous situation which could result in death or serious injury.**

NOTICE **Indicates a situation which could result in damage to the appliance or property.**

IMPORTANT **Indicates important information about the use and care of the appliance.**

⚠ WARNING

The appliance should be destined only to the use for which it has been expressly conceived. Any other use should be considered improper and therefore dangerous. The manufacturer cannot be held responsible for injury or damage resulting from improper, incorrect, and unreasonable use. Failure to install, operate, and maintain the appliance in accordance with this manual will adversely affect safety, performance, component life, and warranty coverage.

To reduce the risk of death, electric shock, serious injury, or fire, follow basic precautions including the following:

- Only qualified service technicians should install and service the appliance.
- The appliance must be installed in accordance with applicable national, state, and local codes and regulations.
- To reduce the risk of electric shock, do not touch the plug with damp hands.
- Unplug the appliance before servicing.
- The appliance requires an independent power supply of proper capacity. See the nameplate for electrical specifications. Failure to use an independent power supply of proper capacity can result in a tripped breaker, blown fuse, damage to existing wiring, or component failure. This could lead to heat generation or fire.
- **THE APPLIANCE MUST BE GROUNDED.** The appliance is equipped with a NEMA 5-15 three-prong grounding plug to reduce the risk of potential shock hazards. It must be plugged into a properly grounded, independent 3-prong wall outlet. If the outlet is a 2-prong outlet, it is your personal responsibility to have a qualified electrician replace it with a properly grounded, independent 3-prong wall outlet. Do not remove the ground prong from the power cord and do not use an adapter plug. Failure to follow these instructions may result in death, electric shock, or fire.
- Do not use an extension cord.
- Do not use an appliance with a damaged power cord. The power cord should not be altered, jerked, bundled, weighed down, pinched, or tangled. Such actions could result in electric shock or fire. To unplug the appliance, be sure to pull the plug, not the cord, and do not jerk the cord.

⚠ WARNING, continued

- The GREEN ground wire in the factory-installed power cord is connected to the appliance. If it becomes necessary to remove or replace the power cord, be sure to connect the power cord's ground wire.
- Do not splash, pour, or spray water directly onto or into the appliance. This might cause short circuit, electric shock, corrosion, or failure.
- Do not make any alterations to the appliance. Alterations could result in electric shock, injury, fire, or damage to the appliance.
- The appliance is not intended for use by persons (including children) with reduced physical, sensory, or mental capabilities, or lack of experience and knowledge, unless they have been given supervision or instruction concerning use of the appliance by a person responsible for their safety.
- Children should be properly supervised around the appliance.
- Do not climb, stand, or hang on the appliance or drawers or allow children or animals to do so. Do not climb into the appliance or allow children or animals to do so. Death or serious injury could occur or the appliance could be damaged.
- Be careful not to pinch fingers when opening and closing the drawers or when handling food pans. Be careful when opening and closing the drawers when children are in the area.
- Open and close the drawers with care. Opening the drawers too quickly or forcefully may cause injury or damage to the appliance or surrounding equipment.
- Do not use combustible spray or place volatile or flammable substances in or near the appliance. They might catch fire.
- Keep the area around the appliance clean. Dirt, dust, or insects in the appliance could cause harm to individuals or damage to the equipment.
- A minimum of 4" (11 cm) clearance is required between the bottom of the cooking equipment heating element and the appliance top. When setting up cooking equipment, follow the cooking equipment manufacturer's setup procedure. Temperature at the appliance top must not exceed 180°F (82°C). For optimum performance, installation of a heat shield (supplied by others) is recommended.
- For cooking equipment on the cabinet, do not exceed the total maximum weight listed for your model.

Total Maximum Weight for Cooking Equipment on the Cabinet				
CRES36	**CRES49, CRES60**	**CRES72**	**CRES85**	**CRES98, CRES110**
700 lb. (318 kg)	700 lb. (318 kg)	1,200 lb. (544 kg)	1,200 lb. (544 kg)	1,500 lb. (680 kg)

- Do not load any single drawer with more than 75 lb. (34 kg) of product. Depending on the weight of product in the drawers, secure the unit as necessary to prevent it from overturning. Do not open more than one drawer at a time.
- The appliance is designed only for storage of food. Employ sanitary methods. Use for any other purposes (for example, storage of chemicals or medical supplies such as vaccine and serum) could cause deterioration of stored items.
- Do not block air inlets or outlets, otherwise cooling performance may be reduced.

⚠ WARNING, continued

- Do not tightly pack the cabinet. Allow some space between items to ensure good air flow. Also allow space between items and interior surfaces.
- Do not put warm or hot foods in the cabinet. Let them cool first, or they will raise the cabinet temperature and could deteriorate other foods in the cabinet or overload the appliance.
- All foods should be wrapped in plastic film or stored in sealed containers. Otherwise foods may dry up, pass their smells onto other foods, cause frost to develop, result in poor appliance performance, or increase the likelihood of cross-contamination. Certain dressings and food ingredients, if not stored in sealed containers, may accelerate corrosion of the evaporator, resulting in failure.
- Do not store items near air outlets. Otherwise, items may freeze up and crack or break causing a risk of injury or contamination of other food.
- All casters on the appliance are lockable. After positioning the appliance in its final location, lock all casters.

NOTICE

- Protect the floor when moving the appliance to prevent damage to the floor.
- Keep ventilation openings, in the appliance enclosure or in the built-in structure, clear of obstruction. Blockage of airflow could negatively affect performance and damage the appliance.
- To prevent deformation or cracks, do not spray insecticide onto the plastic parts or let them come into contact with oil.
- To avoid damage to the gasket, use only the drawer handle when opening and closing.
- To avoid damage to the top seal, do not lift the appliance by the top panel or remove the top panel.
- Do not leave the drawers open.

I. Installation Instructions

⚠ WARNING

- The appliance must be installed in accordance with applicable national, state, and local regulations.
- Appliance is heavy. Use care when lifting or positioning. Work in pairs when needed to prevent injury or damage.
- Do not tilt the appliance more than 45°.

A. Location

⚠ WARNING

- The appliance is not intended for outdoor use.
- Normal operating ambient temperature: 45°F to 100°F (7°C to 38°C) Operation of the appliance, for extended periods, outside of this normal temperature range may affect appliance performance.

- The appliance must not be located next to ovens, grills, or other high heat producing equipment.
- The location must provide a firm and level foundation for the appliance.
- The appliance must not be located in a corrosive environment.
- Minimum Clearance

Top	Side	Rear
WARNING! A minimum of 4" (11 cm) clearance is required between the bottom of the cooking equipment heating element and the appliance top. When setting up cooking equipment, follow the cooking equipment manufacturer's setup procedure.	1" (25 mm)	The factory-installed rear bumpers must be in place to ensure proper rear clearance.

- **WARNING! Temperature at the appliance top must not exceed 180°F (82°C). For optimum performance, installation of a heat shield (supplied by others) is recommended.**
- **WARNING! For cooking equipment on the cabinet, do not exceed the total maximum weight listed for your model.**

Total Maximum Weight for Cooking Equipment on the Cabinet				
CRES36	**CRES49, CRES60**	**CRES72**	**CRES85**	**CRES98, CRES110**
700 lb. (318 kg)	700 lb. (318 kg)	1,200 lb. (544 kg)	1,200 lb. (544 kg)	1,500 lb. (680 kg)

B. Checks Before Installation

⚠ WARNING

The rating label and nameplate provide electrical and refrigerant data. The rating label can be seen by removing the front panel. The nameplate is located on the rear panel. For certification marks, see the nameplate. For electrical connection details, see "I.D. Electrical Connection." We reserve the right to make specification and design changes without prior notice.

- Visually inspect the exterior of the shipping package and immediately report any damage to the carrier. Upon opening the package, any concealed damage should also be immediately reported to the carrier.
- Remove the shipping carton, tape, and packing material. Also remove the protective plastic film from both the exterior panels and the interior drawer panel. If the appliance is exposed to the sun or to heat, remove the film after the appliance cools.
- Remove all accessory containers before discarding the packing materials. Dispose of all packing materials in a proper and environmentally responsible manner.
- Check for missing or damaged accessories.

C. Setup

1. Remove the Appliance from the Pallet

1) Move as close to the final location as possible.
2) Remove the pallet end board. See Fig. 1.
3) Remove the bolts securing the appliance to the pallet.
4) Secure the drawers so that they will not open during removal from the pallet.
5) While supporting the appliance to keep it from tipping, slide the appliance off of the pallet and lower the casters to the floor. ***NOTICE!*** **Do not allow the drawers to bear the weight of the appliance.**

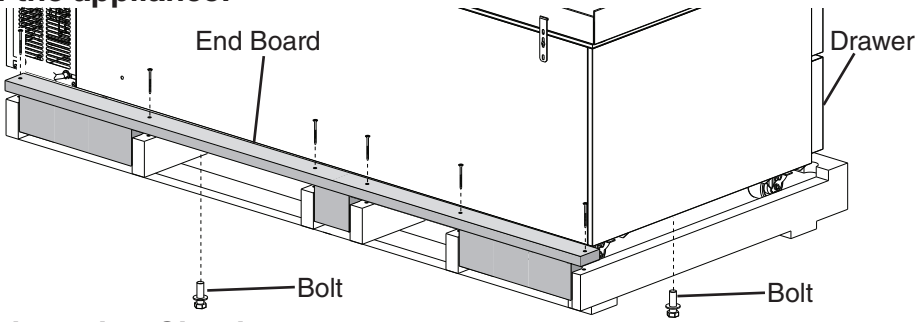

Fig. 1

2. Check the Refrigeration Circuit

- Visually check that the refrigerant lines do not rub or touch other lines or surfaces and that the condenser fan blade turns freely.
- Check that the compressor is snug on all mounting pads.

3. Position the Appliance and Lock All Casters

All casters on the appliance are lockable. After positioning the appliance in its final location, lock all casters.

D. Electrical Connection

⚠ WARNING

- Electrical connection must meet national, state, and local electrical code requirements. Failure to meet these code requirements could result in death, electric shock, serious injury, fire, or severe damage to equipment.
- To reduce the risk of electric shock, do not touch the plug with damp hands.
- The appliance requires an independent power supply of proper capacity. See the nameplate for electrical specifications. Failure to use an independent power supply of proper capacity can result in a tripped breaker, blown fuse, damage to existing wiring, or component failure. This could lead to heat generation or fire.
- **THE APPLIANCE MUST BE GROUNDED.** The appliance is equipped with a NEMA 5-15 three-prong grounding plug to reduce the risk of potential shock hazards. It must be plugged into a properly grounded, independent 3-prong wall outlet. If the outlet is a 2-prong outlet, it is your personal responsibility to have a qualified electrician replace it with a properly grounded, independent 3-prong wall outlet. Do not remove the ground prong from the power cord and do not use an adapter plug. Failure to follow these instructions may result in death, electric shock, or fire.
- Do not use an extension cord.
- Do not use an appliance with a damaged power cord. The power cord should not be altered, jerked, bundled, weighed down, pinched, or tangled. Such actions could result in electric shock or fire. To unplug the appliance, be sure to pull the plug, not the cord, and do not jerk the cord.
- The GREEN ground wire in the factory-installed power cord is connected to the appliance. If it becomes necessary to remove or replace the power cord, be sure to connect the power cord's ground wire.

- Usually an electrical permit and services of a licensed electrician are required.
- The maximum allowable voltage variation is ±10 percent of the nameplate rating.

E. Final Checklist

1) Have the appliance and accessories been checked for shipping damage?
2) Is the appliance level? Have all casters been locked?
3) Is the appliance in a site where the ambient temperature is within 45°F to 100°F (7°C to 38°C) all year around?
4) Have the shipping carton, tape, and packing material been removed from the appliance? Has the protective plastic film been removed from both the exterior panels and the interior drawer panel?
5) Is there at least 4" (11 cm) clearance between the bottom of the cooking equipment heating element and the appliance top? Has the cooking equipment been set up per the cooking equipment manufacturer's setup procedure? Is there at least 1" (25 mm) clearance at sides? Are the factory-installed rear bumpers in place to ensure proper rear clearance?
6) Is the temperature at the appliance top 180°F (82°C) or less? Has a heat shield (supplied by others) been installed?
7) For cooking equipment on the cabinet, is the total weight equal to or less than the total maximum weight listed for your model?

Total Maximum Weight for Cooking Equipment on the Cabinet				
CRES36	**CRES49, CRES60**	**CRES72**	**CRES85**	**CRES98, CRES110**
700 lb. (318 kg)	700 lb. (318 kg)	1,200 lb. (544 kg)	1,200 lb. (544 kg)	1,500 lb. (680 kg)

8) Has the power supply voltage been checked or tested against the nameplate rating? Is the power supply a properly grounded, independent wall outlet? Does the electrical connection meet all national, state, and local code and regulation requirements?
9) Is the compressor snug on all mounting pads? Have the refrigerant lines been checked to make sure they do not rub or touch other lines or surfaces? Has the condenser fan blade been checked to make sure it turns freely?
10) Are all components and fasteners securely in place?
11) Has the end user been given the instruction manual, and instructed on how to operate the appliance and the importance of the recommended periodic maintenance?
12) Has the end user been given the name and telephone number of an authorized service agent?
13) Has the warranty card been filled out and forwarded to the factory for warranty registration?

II. Operating Instructions

A. Important Notes About Usage

⚠ WARNING

- Only qualified service technicians should install and service the appliance.
- Failure to install, operate, and maintain the appliance in accordance with this manual may adversely affect safety, performance, component life, and warranty coverage.
- To reduce the risk of electric shock, do not touch the plug with damp hands.
- Do not splash, pour, or spray water directly onto or into the appliance. This might cause short circuit, electric shock, corrosion, or failure.
- The appliance is not intended for use by persons (including children) with reduced physical, sensory, or mental capabilities, or lack of experience and knowledge, unless they have been given supervision or instruction concerning use of the appliance by a person responsible for their safety.
- Children should be properly supervised around the appliance.
- Do not climb, stand, or hang on the appliance or drawers or allow children or animals to do so. Do not climb into the appliance or allow children or animals to do so. Death or serious injury could occur or the appliance could be damaged.
- Be careful not to pinch fingers when opening and closing the drawers or when handling food pans. Be careful when opening and closing the drawers when children are in the area.
- Open and close the drawers with care. Opening the drawers too quickly or forcefully may cause injury or damage to the appliance or surrounding equipment.
- Do not use combustible spray or place volatile or flammable substances in or near the appliance. They might catch fire.
- Keep the area around the appliance clean. Dirt, dust, or insects in the appliance could cause harm to individuals or damage to the equipment.
- A minimum of 4" (11 cm) clearance is required between the bottom of the cooking equipment heating element and the appliance top. When setting up cooking equipment, follow the cooking equipment manufacturer's setup procedure. Temperature at the appliance top must not exceed 180°F (82°C). For optimum performance, installation of a heat shield (supplied by others) is recommended.
- For cooking equipment on the cabinet, do not exceed the total maximum weight listed for your model.

Total Maximum Weight for Cooking Equipment on the Cabinet				
CRES36	**CRES49, CRES60**	**CRES72**	**CRES85**	**CRES98, CRES110**
700 lb. (318 kg)	700 lb. (318 kg)	1,200 lb. (544 kg)	1,200 lb. (544 kg)	1,500 lb. (680 kg)

- Do not load any single drawer with more than 75 lb. (34 kg) of product. Depending on the weight of product in the drawers, secure the unit as necessary to prevent it from overturning. Do not open more than one drawer at a time.

⚠ WARNING, continued

- The appliance is designed only for storage of food. Employ sanitary methods. Use for any other purposes (for example, storage of chemicals or medical supplies such as vaccine and serum) could cause deterioration of stored items.
- Do not block air inlets or outlets, otherwise cooling performance may be reduced.
- Do not tightly pack the cabinet. Allow some space between items to ensure good air flow. Also allow space between items and interior surfaces.
- Do not put warm or hot foods in the cabinet. Let them cool first, or they will raise the cabinet temperature and could deteriorate other foods in the cabinet or overload the appliance.
- All foods should be wrapped in plastic film or stored in sealed containers. Otherwise foods may dry up, pass their smells onto other foods, cause frost to develop, result in poor appliance performance, or increase the likelihood of cross-contamination. Certain dressings and food ingredients, if not stored in sealed containers, may accelerate corrosion of the evaporator, resulting in failure.
- Do not store items near air outlets. Otherwise, items may freeze up and crack or break causing a risk of injury or contamination of other food.
- All casters on the appliance are lockable. After positioning the appliance in its final location, lock all casters.

NOTICE

- Protect the floor when moving the appliance to prevent damage to the floor.
- Keep ventilation openings, in the appliance enclosure or in the built-in structure, clear of obstruction. Blockage of airflow could negatively affect performance and damage the appliance.
- To prevent deformation or cracks, do not spray insecticide onto the plastic parts or let them come into contact with oil.
- To avoid damage to the gasket, use only the drawer handle when opening and closing.
- To avoid damage to the top seal, do not lift the appliance by the top panel or remove the top panel.
- Do not leave the drawers open.

B. Startup

⚠ WARNING
All parts are factory-adjusted. Improper adjustments may adversely affect safety, performance, component life, and warranty coverage.

Allow the appliance to cool down prior to loading it with food products.

1) Plug the appliance into the electrical outlet. **WARNING! To reduce the risk of electric shock, do not touch the plug with damp hands.** At startup, there is a slight delay before the compressor starts.

C. Controls and Adjustments

1. Temperature Display

The cabinet temperature is displayed on the control module. See Fig. 2. The display default is °F, but it can be changed to read °C. To change, see "II.C.3. Changing the Temperature Display Scale (°F or °C)."

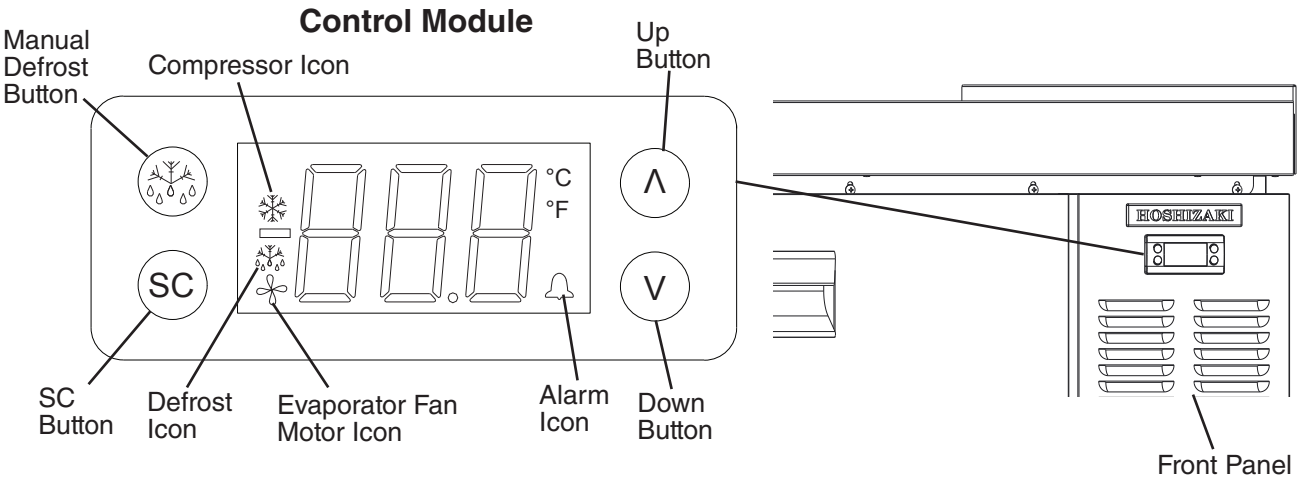

Fig. 2

2. Adjusting the Temperature Setpoint

The temperature setpoint is the value for the average cabinet temperature. The temperature differential for the compressor to turn on and off is ±3°F (±1.7°C) of the temperature setpoint. For example, for a refrigerator temperature setpoint of 36°F (2°C), the compressor comes on at 39°F (3.7°C), and the compressor goes off at 33°F (0.3°C). If necessary, adjust the temperature setpoint temperature as follows:

1) To change the temperature setpoint, press and hold the up button briefly and then release. The current temperature setpoint appears. Press the up or down button until the desired value is displayed. After a few seconds, the display returns to the current cabinet temperature and the temperature setpoint is saved. ***NOTICE!*** **Do not adjust the temperature setpoint more than 2°F (1°C) at a time. Allow the temperature to stabilize for a minimum of 8 hours before making further temperature setpoint adjustments.**

Temperature Setpoint Range	Factory Default Temperature Setting
28°F to 45°F (-2°C to 7°C).	33°F (0.5°C)

3. Changing the Temperature Display Scale (°F or °C)

To change the temperature display scale, follow the steps below. The factory default is °F.

1) Press and hold both the up and down buttons for 5 seconds. "PAS" appears briefly in the display, then "000" appears.
2) Press the up button to change the display to "001".
3) Press the SC button. "ⱢHE" appears in the display. Press the up or down button until "diS" is displayed.
4) Press the SC button. "CFu" appears in the display. Press the SC button again. The current temperature display scale setting appears. Press the up or down button to change the temperature display scale.
5) Press the SC button to save the setting. Wait 1 minute or press the manual defrost button twice to return to the temperature display.

D. Control Module Icons

Control module icons inform you of energized components and if the appliance is in alarm.

Control Module Icons	
Icon	**Meaning**
	Compressor Compressor running.
	Defrost Appliance is in defrost cycle. See "II.E. Defrost" for details.
	Evaporator Fan Motor (Icon is Applicable to Freezers Only)
	Alarm Appliance is in alarm. See "II.F. Alarm Safeties" for details.

E. Defrost

1. Automatic Defrost

Defrost is heated and is time-initiated and temperature terminated.

2. Manual Defrost

To initiate a manual defrost, press the manual defrost button.

F. Alarm Safeties

Alarm signals are designed to protect the appliance and food product. These alarms give information or warnings in the event the appliance is operating out of acceptable parameters. Should one of the alarms occur, follow the instructions in the table below to address the alarm. The alarm code and alarm icon flash with audible alarm.

Alarm Signals		
Alarm Code	**Problem**	**Corrective Action/Reset Details**
E01	Cabinet Thermistor Malfunction Alarm Cabinet thermistor has failed.	Call a qualified service technician. Beeps for 10 seconds, then silent for 50 seconds. To silence the alarm, press and release the up button. Appliance cycles 5 min. on, 5 min. off.
E02	Defrost Thermistor Malfunction Alarm Defrost thermistor has failed.	Call a qualified service technician. Beeps for 10 seconds, then silent for 50 seconds. To silence the alarm, press and release the up button. Appliance cycles on and off with cabinet thermistor.
Hi	High Temperature Alarm Cabinet temperature has remained above 57°F (13.9°C) for more than 2 hours.	If obvious corrections such as closing drawers and cleaning the air filter and/or condenser do not bring temperature back in range, call a qualified service technician. Beeps for 10 seconds, then silent for 50 seconds. To silence the alarm and clear "Hi" from the display, press and release the up button. The alarm icon stays on. Automatically resets when temperature returns to normal.
Lo	Low Temperature Alarm Cabinet temperature has remained below 26°F (-3.3°C) for more than 2 hours.	If obvious corrections do not bring the temperature back in range, call a qualified service technician. Beeps for 10 seconds, then silent for 50 seconds. To silence the alarm and clear "Lo" from the display, press and release the up button. The alarm icon stays on. Automatically resets when temperature returns to normal.
UHi	High Voltage Alarm (135VAC±5% or more)	Call a qualified service technician. The compressor de-energizes if voltage protection operates. The voltage safeties automatically reset when voltage is corrected.
ULo	Low Voltage Alarm (96VAC±5% or less)	

G. Food Storage

⚠ WARNING

- The appliance is designed only for storage of food. Employ sanitary methods. Use for any other purposes (for example, storage of chemicals or medical supplies such as vaccine and serum) could cause deterioration of stored items.
- Do not block air inlets or outlets, otherwise cooling performance may be reduced.
- Do not tightly pack the cabinet. Allow some space between items to ensure good air flow. Also allow space between items and interior surfaces.
- Do not put warm or hot foods in the cabinet. Let them cool first, or they will raise the cabinet temperature and could deteriorate other foods in the cabinet or overload the appliance.
- All foods should be wrapped in plastic film or stored in sealed containers. Otherwise foods may dry up, pass their smells onto other foods, cause frost to develop, result in poor appliance performance, or increase the likelihood of cross-contamination. Certain dressings and food ingredients, if not stored in sealed containers, may accelerate corrosion of the evaporator, resulting in failure.
- Do not store items near air outlets. Otherwise, items may freeze up and crack or break causing a risk of injury or contamination of other food.

H. Safety Devices

1. Compressor External or Internal Overload

If combined temperature/amperage value is above the limit specified by the compressor manufacturer, the compressor overload operates independently to turn off the compressor. The compressor overload de-energizes the compressor until the temperature/amperage value returns to an acceptable level.

2. Short-Cycle Protection

There is a 2-minute minimum off-time and on-time for the compressor.

Note: Time may vary with compressor overload or high-pressure switch activation.

3. High-Pressure Switch

If high-side refrigeration pressure exceeds Hoshizaki specifications, the high-pressure switch activates and de-energizes the compressor circuit until the refrigeration pressure returns to an acceptable level.

I. Cooling Performance

Be sure the appliance is properly installed and located for optimum cooling performance. If cooling performance is not at its optimum level, check the following items:

- Drawers opened too often.
- Drawers left open. Close.
- Cabinet too tightly packed or air inlets/outlets blocked. Allow some space between items to ensure good air flow.
- Warm or hot foods inside. Take them out until they cool down more.
- Ambient temperature too high. Avoid installation near high heat producing equipment or exposure to direct sunlight.
- Not enough clearance. Ensure a minimum of 4" (11 cm) clearance between the bottom of the cooking equipment heating element and the appliance top. Ensure cooking equipment is set up per the cooking equipment manufacturer's setup procedure. Ensure a minimum of 1" (25 mm) clearance at sides.
- Temperature at the appliance top too high. Ensure the temperature at the appliance top does not exceed 180°F (82°C). For optimum performance, installation of a heat shield (supplied by others) is recommended.
- Temperature setpoint not cold enough. Adjust to a colder setting. See "II.C.2. Adjusting the Temperature Setpoint" for details.
- Appliance in defrost cycle. The cabinet temperature may rise temporarily during the defrost cycle, but this will not affect the food inside.

J. Cabinet Condensation

In the event condensation develops on the cabinet exterior, check the following items:

- Drawers left open. Close.
- Ambient humidity too high. In high humidity areas it may be necessary to wipe off the cabinet frame occasionally.

III. Cleaning and Maintenance Instructions

A. Cleaning

⚠ WARNING

- Unplug the appliance before cleaning to prevent electric shock by unexpected entrance of water into the appliance or injury by moving parts. To reduce the risk of electric shock, do not touch the plug with damp hands.
- Before cleaning the appliance, move all foods into another clean refrigerator.
- Before cleaning the appliance, disconnect any cooking equipment on the appliance top and allow to cool.
- Do not splash, pour, or spray water directly onto or into the appliance. This might cause short circuit, electric shock, corrosion, or failure.
- Carefully follow instructions provided with cleaning and sanitizing products.

NOTICE

- To prevent damage to the plastic surfaces, do not use the following: hot water, thinner, benzine, alcohol, petroleum, soap powder, polishing powder, alkaline cleaner, acid, scouring pad and especially those strong cleaners for use on a ventilating fan or a cooking range.
- To prevent corrosion and damage to stainless steel surfaces, use only products formulated for use on stainless steel appliances. Do not use steel wool, abrasive products, or products containing sodium hypochlorite (chlorine bleach).
- Use a clean cloth for cleaning.

1. Exterior

Wipe the exterior occasionally with a clean, soft cloth. Use a damp cloth containing a neutral cleaner to wipe off oil or dirt buildup. Clean any rust colored spots using a non-abrasive cleanser.

2. Cabinet Interior

Spills should be wiped up promptly to avoid unpleasant odors. The cabinet interior should be cleaned periodically with a mild soap or detergent and warm water.

3. Drawer Gaskets

Drawer gaskets should be cleaned regularly with mild soap and warm water to remove dirt and grease.

4. Drawers

Drawers and drawer slides are removable.

- **To remove a drawer:** Remove all items from the drawer. Pull the drawer out to its fully extended position. Open the safety clips (one on each side) by sliding them forward. See Fig. 3. Lift up on the handle slightly, then pull to disengage the drawer. Be sure to support the rear and front of the drawer while removing it. **WARNING! Be sure to close the safety clips when reinstalling the drawer.**
- **To remove a drawer slide (center slide containing rollers):** Open the stop levers (one on each side) by sliding them to the rear. See Fig. 4. Lift up on the drawer slide slightly, then pull to disengage the drawer slide. **WARNING! Be sure to close the stop levers when reinstalling the drawer.** Drawer slides do not require lubrication, but drawer slides should be kept clean and free of food.

Note: Drawer slides are dishwasher safe.

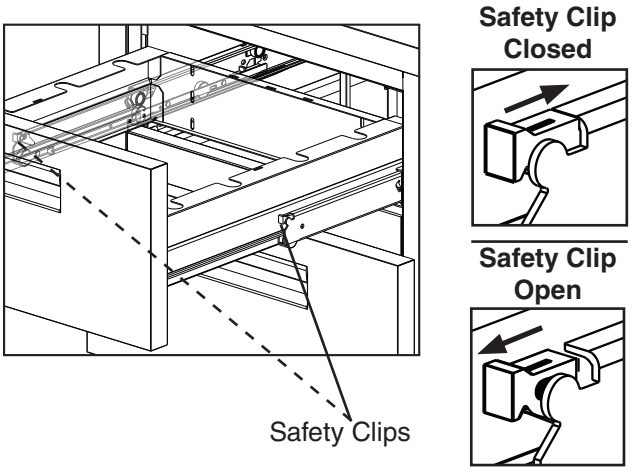

Fig. 3

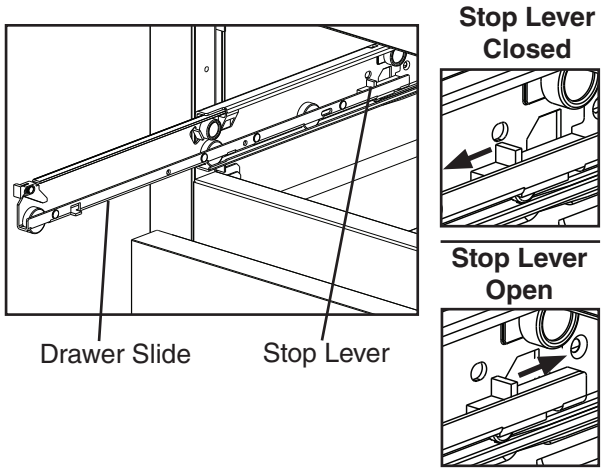

Fig. 4

B. Maintenance

⚠ WARNING

- Unplug the appliance before performing maintenance to prevent electric shock or injury by moving parts. To reduce the risk of electric shock, do not touch the plug with damp hands.
- Before performing maintenance, move all foods into another clean refrigerator.
- Before performing maintenance, disconnect any cooking equipment on the appliance top and allow to cool.

1. Condenser

Check the condenser twice a year and use a brush or vacuum cleaner to clean the condenser as required.

2. Power Supply Connection

If the plug or power cord is damaged, contact your local Hoshizaki service representative or local Hoshizaki distributor immediately and ask for repairs.

All other maintenance or service on the appliance should be performed in accordance with the Hoshizaki Service Manual by a qualified service technician.

IV. Preparing the Appliance for Periods of Non-Use

When shutting down the appliance for more than one week, follow the instructions below.

⚠ WARNING
When preparing the appliance for long storage, prevent the drawers from closing to reduce the risk of children getting trapped.

NOTICE
When preparing the appliance for long storage, clean the appliance. See "III.A. Cleaning" for details.

1) Before shutting down the appliance, move all foods into another clean refrigerator.
2) Unplug the appliance. **WARNING! To reduce the risk of electric shock, do not touch the plug with damp hands.**
3) **WARNING! Prevent the drawers from closing to reduce the risk of children getting trapped.**

V. Disposal

⚠ WARNING

When preparing the appliance for disposal, remove the drawers to reduce the risk of children getting trapped.

The appliance contains refrigerant and must be disposed of in accordance with applicable national, state, and local codes and regulations. Refrigerant must be recovered by properly certified service personnel.

HOSHIZAKI AMERICA, INC.

618 Hwy. 74 South, Peachtree City, GA 30269 USA (P) 770.487.2331 (F) 770.487.3360 hoshizakiamerica.com

1A4409-010